TRUCK, TANK, WATER, HEAVY, MC3 - MACK

MEDIUM AND HEAVY GRADE REPAIR

This instruction is authorised for use by command of the Chief of Army. It provides direction, mandatory controls and procedures for the operation, maintenance and support of equipment. Personnel are to carry out any action required by this instruction in accordance with EMEI General A 001.

TABLE OF CONTENTS

LIST OF FIGURES

LIST OF TABLES

Blank Page

GENERAL

Introduction

1. This EMEI contains Medium and Heavy Grade Repair instructions for the water tank fitted to the Truck, Tank, Water, Heavy, MC3 – Mack. For further information on the cab/chassis or repair and servicing information of the cab/chassis, refer to EMEI Vehicle G 70 decade.

2. All work listed in this instruction can be carried out at either a Medium or Heavy Grade Repair facility.

Associated Publications

3. Reference may be necessary to the latest issue of the following documents:

a. Complete Equipment Schedules (CES):

(1) SCES 11657.....Truck, Tank Water, Heavy, MC3, 12 500 L Capacity, Pump Feed;

(2) SCES 11658.....Equipment Kit, Vehicular Distributor, Water, Tank Type, Truck Mtd;

b. EMEI Engr Equip W 009-3 – Water transport equipment, cleaning and sanitising;

c. EMEI Vehicle G 70 Decade – Truck, Cargo, Heavy, MC3 - Mack;

d. EMEI Vehicle G 752 – Truck, Tank, Water, Heavy, MC3 - Mack – Technical Description;

e. EMEI Vehicle G 753 – Truck, Tank, Water, Heavy, MC3 - Mack – Light Grade Repair;

f. EMEI Vehicle G 757-4 – Fitting of Spray-Bar Supports;

g. EMEI Vehicle G 757-5 – Fitting of Heavy Duty Discharge Manifold;

h. EMEI Vehicle G 757-6 – Tank Compartment Delivery Pipes;

i. EMEI Vehicle G 757-10 – Fitting of a Walkway Fall Restraint System;

j. EMEI Vehicle G 759 – Truck, Tank, Water, Heavy, MC3 - Mack – Servicing Instruction; and

k. EMEI Vehicle K 016-1 – Total Restraint Access Module (TRAM) Safety System Technical Manual.

Safety

4. The following warnings shall be adhered to when carrying out repairs to the water tank:

WARNING

Before working on the hydraulic system, check the temperature of the hydraulic fluid on the gauge fitted to the oil reservoir. Ensure that hydraulic fluid is sufficiently cool to avoid burns.

The TRAM safety system is to be used at all times when working at heights on the water tank body.

Overhead lifting equipment must have a minimum safe working load of 1200 kg.

CAUTION

Guidance on inspection, cleaning and sanitising of potable water tanks are detailed in EMEI Engr Equip W 009-1.

Item Identification Locations

5. The item identification locations are described in Table 1.

Table 1 Item Identification Locations

Serial	Item	Location
1	Chassis number	Right-hand rear frame, above intermediate axle
2	Chassis nameplate	Left-hand door inside cab
3	Engine number	Right-hand top of timing gear housing
4	Front axle number	Left rear of axle housing
5	Transmission number	Left-hand side
6	Transfer case	Right-hand rear
7	Intermediate axle number	Right-hand front of carrier housing
8	Rear axle number	Right-hand front of carrier housing
9	Injection pump identification	Side of the pump
10	Power take-off (PTO)	Right-hand side
11	Hydraulic pump	Lower side of the pump
12	Water tank	Left-hand forward area

List of Lubricants

6. The list of lubricants is detailed in Table 2.

Table 2 List of Lubricants

Serial	Equipment	Lubricant	Capacity (Litres)
1	Oil reservoir	OM-65	135
2	Transmission	OEP-220	10.4

DETAIL

WARNING

Before working on the hydraulic system, check the temperature of the hydraulic fluid on the gauge fitted to the oil reservoir. Ensure that hydraulic fluid is sufficiently cool to avoid burns.

It is vitally important that dirt and other foreign matter are not allowed to enter the hydraulic system during repairs. Dirt or fluid other than clean hydraulic fluid in the system will cause almost immediate failure. Plug or protect openings to prevent dirt entering the system. Use plastic plugs or covers only for this purpose. Do not use cloth or paper as plugs or covers.

PTO

7. **Removal.** To remove the PTO:

WARNING

Before removing the PTO, ensure that the hydraulic fluid is sufficiently cool to avoid burns.

CAUTION

Both the PTO and adapter housings are quite brittle and easily damaged unless handled carefully.

a. Wash the area around the PTO and the hydraulic pump and blow them dry with compressed air.

b. Remove the hydraulic hoses (Figure 1).

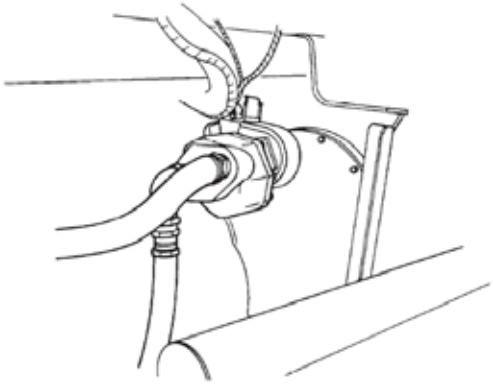

Figure 1 Hydraulic Pump Hoses

c. Seal the hoses and the ports in the hydraulic pump with plastic plugs.

d. Remove the air line from the PTO selector housing.

e. Remove the six nuts and washers securing the PTO and the adapter to the transmission (Figure 2).

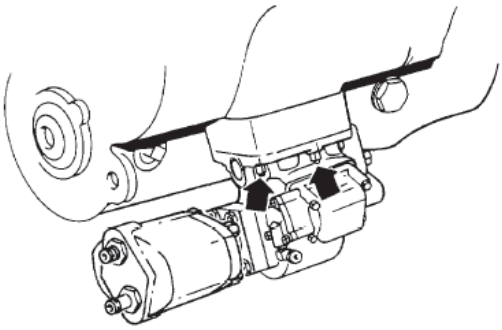

Figure 2 Location of Retaining Nuts

f. Remove the PTO, pump assembly and the adapter housing from the transmission.

g. Remove all traces of gasket residue from the mounting surfaces.

8. Disassembly. To disassemble the PTO:

a. Match mark the pump, the selector housing and the PTO housing to ensure their correct positioning during reassembly.

b. Remove the four nuts and washers securing the pump to the PTO and remove the pump.

c. Remove the four socket-head bolts securing the selector housing to the PTO and remove the selector housing (Figure 3).

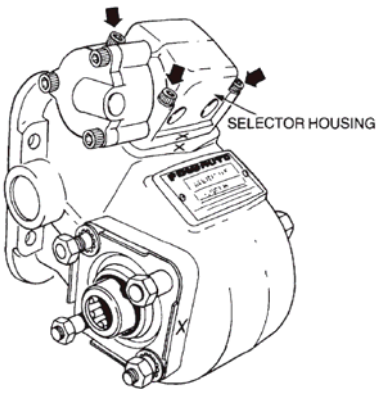

Figure 3 Socket Head Bolt Location

d. Remove a welsh plug from one end of the idler shaft.

e. Remove the circlip (furthest from the end of the idler shaft where the welsh plug was removed) and slide the PTO housing along the shaft.

f. Install the PTO housing in a press and remove the idler shaft using the press and a suitable adapter (Figure 4).

NOTE

As the shaft is pressed out of the housing, it will cause the gear, thrust washer and circlip to slide along the shaft and will remove the other welsh plug and a roller bearing.

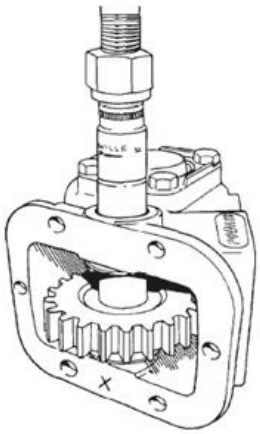

Figure 4 Removing Idler Shaft

g. Lift the second circlip from the groove and continue to press the shaft out until the circlips, the thrust washers and the gear can be removed.

NOTE

When the gear is removed from the shaft a steel ball will drop out of an indent within the gear bore. This ball acts as a key, locking the gear and shaft together, but still allowing the gear to move lengthways along the shaft.

h. To remove the remaining needle roller bearing from the housing, press the shaft back in the opposite direction.

i. Remove the four bolts securing the drive shaft bearing cover plate to the housing and remove the cover plate and gasket (Figure 5).

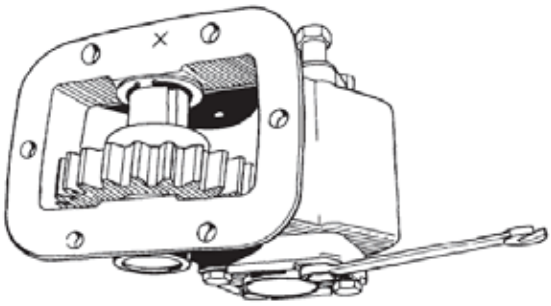

Figure 5 Removing Bearing Cover Plate

j. Remove the circlip from the groove in the drive shaft and slide it along the shaft, then remove the bearing cups by hand.

k. Remove the bearing cone from the shaft at the end opposite the output using a suitable puller.

NOTE

Ensure that the puller is pulling against the inner race and not the cage.

l. Slide the gear and circlip off the shaft while withdrawing the shaft, complete with the other bearing, from the housing.

m. Position the drive shaft in a press then press the remaining bearing off the shaft.

9. Cleaning and Inspection. To clean and inspect the PTO:

a. Clean all parts thoroughly with a suitable cleaning agent then blow them dry with compressed air.

NOTE

Ensure that all gasket residues are removed.

b. Inspect the housing for damage or cracking and replace it if necessary.

c. Check the gears for cracked, chipped or worn teeth.

d. Check the splines in the drive gear bore for wear and replace the gears as necessary.

e. Check the idler shaft bearing surfaces for pitting or wear.

f. Check the channel in the idler shaft for wear and replace it as necessary.

g. Check the internal and external splines on the drive shaft for wear and replace the drive shaft as necessary.

h. Check the condition of the bearings and replace them as necessary.

10. Reassembly. To reassemble the PTO:

a. Place the drive shaft in a press.

b. Position the bearing on the output end of the shaft with the taper facing away from the splines.

c. Press the bearing onto the shaft until it butts firmly against the shoulder.

d. Remove the shaft from the press.

e. Install a circlip onto the drive shaft.

f. Position the shaft partially in the housing, ensuring that the output end of the shaft is on the correct side of the housing.

g. Install the drive gear in the housing and align it with the drive shaft.

h. Feed the drive shaft into the housing and through the drive gear (Figure 6).

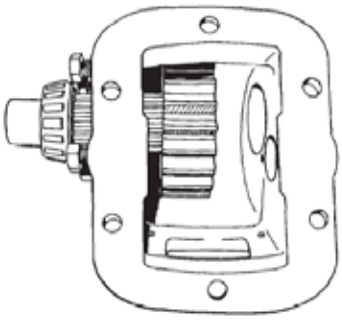

Figure 6 Installing Drive Shaft and Gear

i. Place the housing and the shaft in a press.

j. Position a bearing, with the taper facing away from the splines, on the drive shaft at the end opposite the output.

k. Press the bearing onto the shaft (Figure 7) until it butts firmly against the shoulder.

l. Remove the housing from the press.

m. Lubricate the bearings with OEP-220 then install the bearing cups into the housing.

n. Install the bearing cover and the gaskets.

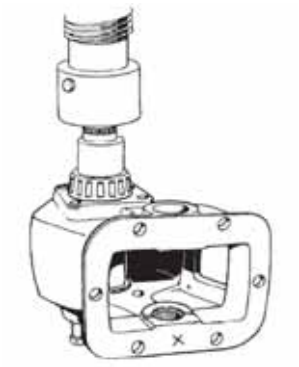

Figure 7 Installing Drive Shaft Bearing

o. Install the cover retaining bolts and torque them to 34–38 N.m (25–28 lbf. ft).

p. Position the idler shaft partially into the housing.

q. Install a thrust washer and a circlip onto the shaft.

r. Insert the steel ball into the detent in the idler gear then position the idler gear in the housing.

s. Align the channel in the idler shaft with the steel ball in the idler gear shown in Figure 8.

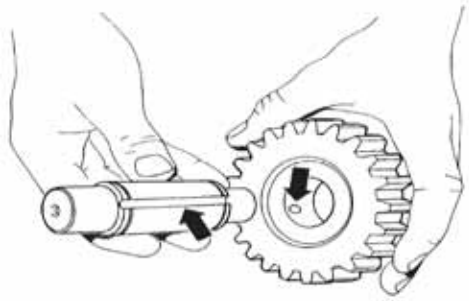

Figure 8 Channel and Steel Ball

t. Push the idler shaft further into the housing and into the idler gear (Figure 9).

u. Install the second circlip into the groove on the idler shaft.

v. Position the thrust washer on the shaft.

w. Push the idler shaft into the housing, butting the thrust washer against the housing.

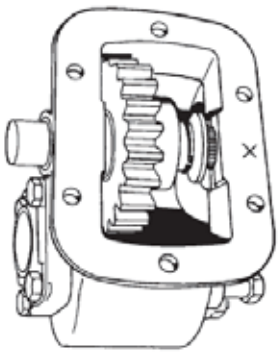

Figure 9 Installing Idler Shaft and Gear

x. Position the first thrust washer against the housing and insert the first circlip into the groove in the idler shaft.

y. Lubricate the needle roller bearings then press them into the housing on both ends of the idler shaft.

z. Install the welsh plugs.

aa. Lubricate the gears and bearings of the PTO liberally with clean OEP-220.

bb. Place a protective cover over the PTO and set it aside.

Air Operated Selector

11. Disassembly. To disassemble the air operated selector:

WARNING

Before removing the selector housing air inlet cover, ensure that the circlip used to retain the selector fork to the piston is in place. The selector fork will prevent the piston flying out of the cylinder under spring pressure and potentially causing injury.

a. Remove the three socket-head bolts from the air inlet cover (Figure 10) and remove the cover.

b. Discard the O ring.

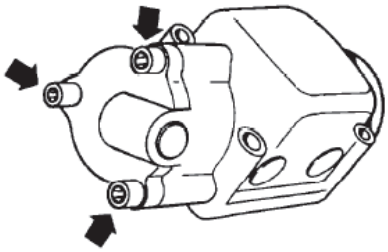

Figure 10 Air Inlet Cover Retaining Bolts

NOTE

Spring pressure will cause the piston to protrude from the housing when the cover is removed.

c. Push the piston into the cylinder bore by hand and remove the circlip retaining the selector fork to the piston from its groove (Figure 11).

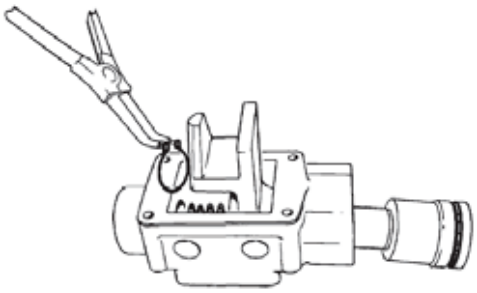

Figure 11 Removing Circlip

d. Gradually release the pressure on the piston allowing the piston to move up the bore.

e. Feed the circlip and selector fork off as the piston and return spring are removed.

f. Remove the selector fork and circlip from the housing, taking note as to which way the step in the fork is facing.

g. Discard the circlip.

h. Remove and discard the piston O ring (Figure 12).

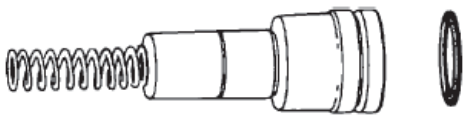

Figure 12 Piston and O ring

12. Cleaning and Inspection. To clean and inspect the air operated selector:

a. Clean all parts with a suitable cleaning agent and blow them dry with compressed air.

b. Inspect the housing cylinder bore and piston for excessive wear or scoring and replace parts as necessary.

c. Inspect the selector fork for damage or wear and replace it if necessary.

d. Check the return spring for breaks, cracking or wear and replace the spring as necessary.

13. Reassembly. To reassemble the air operated selector:

a. Install a new O ring onto the piston.

b. Lubricate the O ring with rubber grease.

c. Install the return spring into the bore of the piston.

d. Insert the piston partially into the cylinder bore, then position the selector fork and circlip onto the piston (Figure 13).

NOTE

Ensure that the step in the fork is facing the correct way.

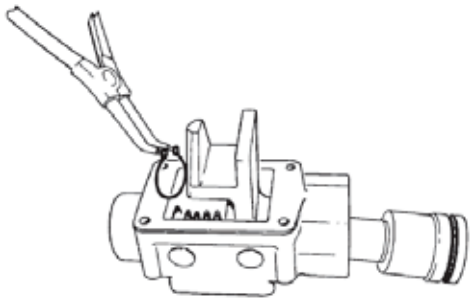

Figure 13 Installing Circlip

e. Push the piston into the bore while feeding the selector fork and circlip onto the piston.

NOTE

Ensure that the circlip is correctly seated in the groove.

f. Insert a new O ring in the groove on the air inlet cover then install the cover onto the housing.

g. Fit the retaining bolts and torque them to 9–13 N.m (7–10 lbf.ft).

h. Assemble the selector housing and a new gasket onto the PTO housing, aligning the match marks and ensuring that the selector fork is correctly located over the idler gear.

i. Install the four socket-head bolts and torque them to 34–38 N.m (25–28 lbf.ft).

Adapter Housing

14. Disassembly. To disassemble the adapter housing:

CAUTION

The adapter housing is quite brittle and easily damaged unless handled carefully.

a. Place the adapter housing in a soft-jawed vice.

b. Using a C-spanner, remove the bearing retaining collar.

NOTE

The collar will be firm on the thread due to the locking indentations.

c. Support the adapter housing on a press.

d. Press the shaft through the gear until there is sufficient space to remove the gear (Figure 14).

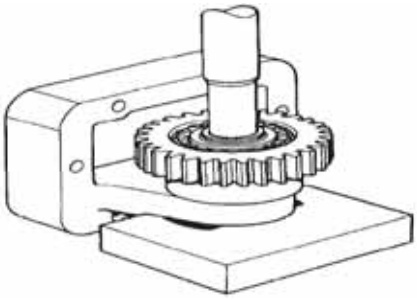

Figure 14 Pressing Shaft from Housing

e. Remove the bearing cones and spacers from the assembly.

f. Using a soft drift and hammer, remove the bearing cups from the gear.

g. Remove the snap ring from the gear if damage is evident (Figure 15).

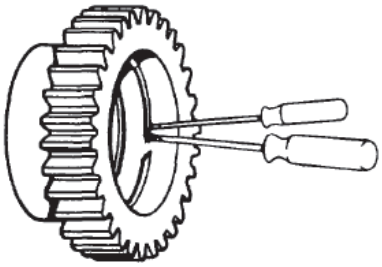

Figure 15 Removing Snap Ring

15. Cleaning and Inspection. To clean and inspect the adapter housing:

a. Clean all parts thoroughly with a suitable cleaning agent and ensure that all gasket residues are removed.

b. Inspect the gear for worn or damaged teeth and replace it as necessary.

c. Check the bearings for wear or damage and replace them as necessary.

d. Check the shaft for wear or damage and replace it as necessary.

e. Check the thickness of the bearing-to-housing spacer, 2.99 mm (0.114 in.); the bearing cone spacer, 3.55 mm (0.140 in.) and the snap ring, 3.96 mm (0.156 in.) and replace them if they are worn or damaged.

NOTE

The snap ring provides the correct bearing cup spacing.

16. Reassembly. To reassemble the adapter housing:

a. Install the snap ring (if removed).

b. Press the bearing cups into the gear.

NOTE

Ensure that the bearing cups butt firmly against the snap ring.

c. Position the bearing-to-housing spacer and the inner bearing on the shaft (Figure 16).

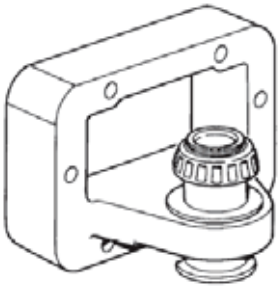

Figure 16 Positioning Bearing and Spacer

d. Place the adapter housing and shaft in the press.

e. Position the gear, the spacer and the outer bearing cone on the shaft and press the bearings and gear onto it.

f. Ensure that the flat on the shaft flange is correctly aligned and that the bearings are seated firmly against the spacers (Figure 17).

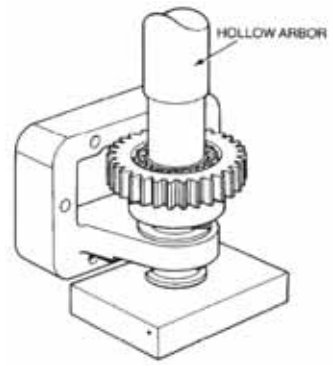

Figure 17 Installing Shaft, Gear and Bearings

g. Install the new retaining collar and tighten it securely.

h. Stake the retaining collar to the shaft, using a staking chisel and hammer.

i. Lubricate the bearings with OEP-220.

j. Check that the gear revolves freely and without undue noise.

17. Determining Backlash. To determine backlash:

a. Insert a wooden wedge between the transmission PTO drive gear and the transmission housing (Figure 18).

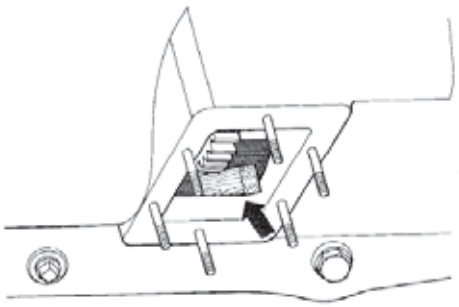

Figure 18 Wedge Location

b. Install the new gaskets and the adapter housing onto the transmission housing and secure them in place with the top and bottom bolts only.

c. Install a dial indicator onto the adapter housing with the dial indicator plunger resting squarely on the adapter gear (Figure 19).

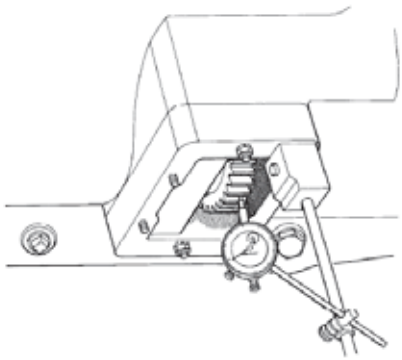

Figure 19 Checking PTO Adapter to Transmission Backlash

d. Rock the adapter gear back and forth by hand and check the backlash reading.

e. Add or subtract gaskets between the adapter and the transmission to obtain a backlash figure of 0.250-0.375 mm (0.010–0.015 in.).

f. Remove the nuts from the adapter and remove the adapter from the transmission.

g. Retain the gaskets.

h. Remove the wooden wedge from the transmission.

i. Position the new gaskets and the adapter onto the PTO and secure the adapter with two suitably sized nuts and bolts.

j. Install a dial indicator on the adapter housing with the dial indicator plunger resting squarely on the adapter gear (Figure 20).

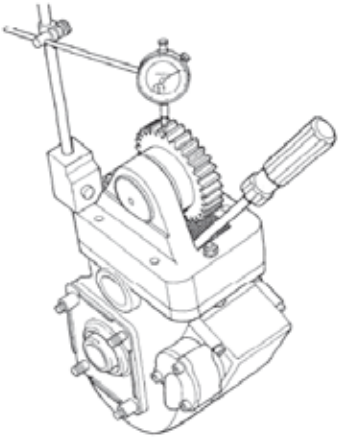

Figure 20 Checking Adapter to PTO Backlash

k. Slide the idler gear against the spring pressure to mesh the idler gear with the adapter gear.

l. Hold the gear in this position and lock it to prevent it from turning.

m. Rock the adapter gear back and forth by hand and check the backlash reading.

n. Add or subtract gaskets between the adapter and PTO to obtain a backlash figure of 0.250–0.375 mm (0.010–0.015 in.).

o. Remove the nuts and bolts and separate the adapter housing and PTO.

p. Retain the gaskets.

18. Installation. To install the PTO:

CAUTION

Both the PTO and adapter housings are quite brittle and easily damaged unless handled carefully.

a. Position the gaskets (previously determined when setting the adapter-to-transmission backlash) and the adapter onto the transmission.

b. Position the gaskets (previously determined when setting the adapter-to-PTO backlash) onto the adapter then install the PTO.

c. Apply Loctite 271 to the studs and install the spring washers and nuts.

d. Torque the nuts to 34–38 N.m (25–28 lbf.ft).

e. Fit the hydraulic pump and gasket to the PTO.

f. Apply Loctite 271 to the studs and install the lock washers and nuts.

g. Torque the nuts to 34–38 N.m (25–28 lbf.ft).

h. Remove the plastic plugs from the pump and hoses.

i. Fit the hoses and tighten the screw clamp and the connector securely.

j. Reconnect the air line to the selector housing and tighten it securely.

k. Start the truck engine and engage the PTO.

l. Check for leaks at the gaskets, hydraulic hoses and the air hose and rectify them if necessary.

m. Check that the PTO is operating correctly and not making a whining or rattling noise.

n. If the PTO whines or rattles repeat the backlash adjustments (Para 17.).

o. Disengage the PTO and shut down the engine.

p. Check the fluid level in the transmission and if necessary, top up with OEP-220.

q. Check the fluid level in the oil reservoir and if necessary, top up with OM-65.

Water Tank

19. Removal. To remove the water tank:

a. Ensure that each compartment in the water tank is empty before proceeding with the tank removal.

NOTE

Final drainage of the pump primer reservoir in the centre compartment can be achieved via the pump priming hose.

b. Disconnect and remove the flexible hose from between the pump and the heavy duty discharge manifold.

c. Remove the nuts and bolts securing the heavy duty discharge manifold and the three on/off road control valves to the tank outlet pipes (Figure 21).

d. Remove the heavy duty discharge manifold and control valves.

e. Discard the gaskets.

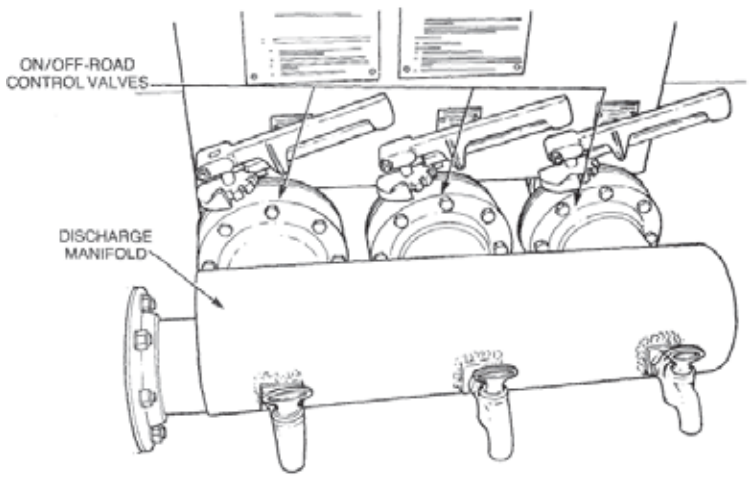

Figure 21 Heavy Duty Discharge Manifold and Control Valves

f. Remove the three pipe clamps securing the outlet pipes to the bottom of the instruction plate panel (Figure 22).

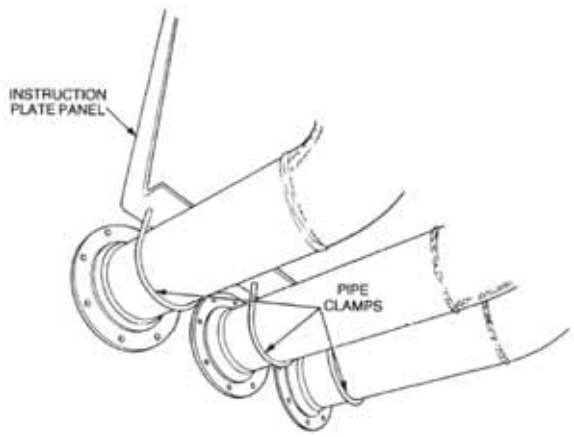

Figure 22 Pipe Clamp Location

g. Remove the zip clamps which secure the pump switch wiring to the outlet pipe.

h. Unscrew the clamps on the water pump priming and bleed hoses.

i. Remove the hoses from the tank (Figure 23).

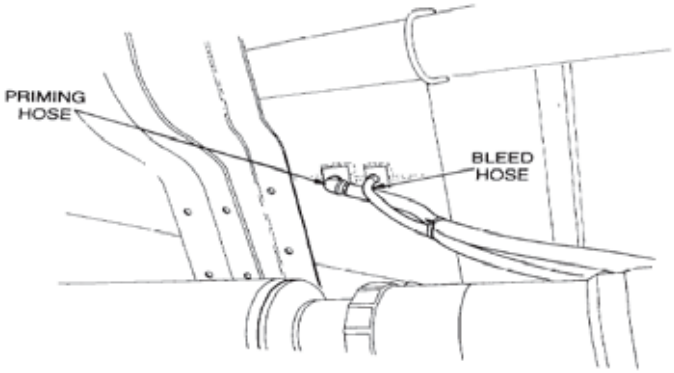

Figure 23 Location of Priming and Bleed Hoses

j. Remove the six nuts connecting each outlet pipe to the bottom of the tank.

k. Remove the outlet pipe from the front compartment.

l. Discard the gaskets.

NOTE

The outlet pipe in the centre compartment protrudes into the water tank and cannot be removed until the tank has been lifted approximately 200 mm (8 in.) from the truck.

m. Remove the nuts and bolts joining the two sections of the third compartment outlet pipe together (Figure 24).

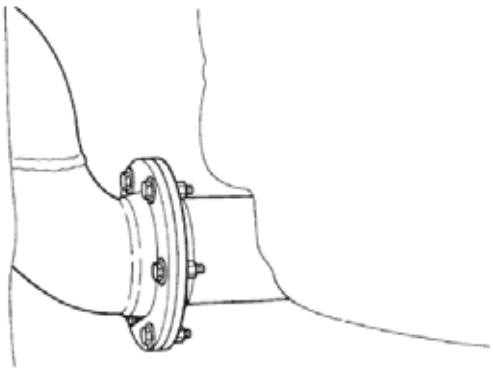

Figure 24 Outlet Pipe Joint

n. Remove the pipe clamp securing the front section to the tank leg transfer brace and remove the front section.

o. Discard the gasket.

p. Remove the nut securing the pump start switch to the instruction plate panel.

q. Remove and secure the switch away from the panel.

r. Remove the four bolts from the instruction plate panel and remove the panel.

s. Remove the screws and nuts securing the side clearance lights to the hose troughs.

t. Remove and secure the lights away from the hose troughs.

u. Insert a jemmy bar (crowbar) between the tank and the cross-tube on the front tank support.

v. Remove the four nuts and the grease fitting from one of the bearing blocks on the front tank support (Figure 25).

w. Using the jemmy bar, rock the tank up and down while removing the four bolts from the bearing block.

x. Repeat this procedure for the other bearing block.

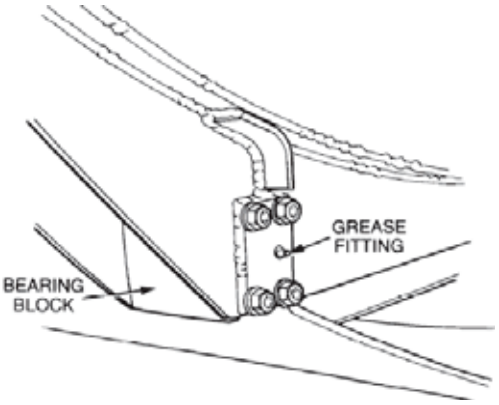

Figure 25 View of Right-hand Front Bearing Block

y. Rock the tank up and down and ease the bearing blocks out, together with the metal spacers and the felt washers.

z. Lower the tank onto the front support cross-tube then tag the metal spacers for the correct location at reassembly.

aa. Position overhead lifting equipment above the water tank.

bb. Connect slings to the two lifting eyes on the tank and to the lifting equipment and take up the slack.

cc. Remove the 5/8 in. bolt and washer securing the central pivot pin to the rear mounting bracket.

dd. Remove the pivot pin from the mounting bracket. If necessary use the jemmy bar to rock the tank up and down to enable the pin to be removed.

ee. Raise the water tank approximately 200 mm (8 in.) from the truck chassis and remove the outlet pipe from the centre compartment.

ff. Lift the water tank clear of the truck.

gg. Lower the tank onto a cradle, taking care not to damage the outlet studs or tank skin.

20. Disassembly. To disassemble the water tank:

a. Remove the split pins and the pivot pins from each of the hatch arms and eye bolts.

b. Remove the hatches and eye bolts from the top of the tank.

c. Remove the eight bolts, nuts and washers securing the ladder to the tank and remove the ladder.

d. Remove the two bolts, nuts and washers securing each hose trough mounting bracket to the tank.

e. Remove the hose troughs complete with the mounting brackets from the tank.

21. Cleaning and Inspection. To clean and inspect the water tank:

WARNING

Personnel involved in tank entry are to be trained in Confined Space Entry Procedures. A Confined Space Entry Permit must be issued prior to entering the water tank in order to carry out inspections, cleaning or maintenance work.

a. Clean the tank, both inside and out in accordance with EMEI Engr Equip W 009-3.

b. Check the tank for corrosion or any sign of damage, such as stress fractures around the outlet flanges and the tank mounting legs and repair or replace the tank as necessary.

c. Check the condition of the anode block in each compartment.

d. Replace any block which is badly eroded (Ref EMEI Vehicle G 753).

e. Check the condition of the hatch pivot brackets.

NOTE

If the brackets need replacing, the combing around the top of the manhole will also have to be replaced. The brackets and combing are only available as an assembly.

f. Check the condition of the ladder and hose troughs and repair or replace them as necessary.

g. If repairs to the tank are to be carried out, a Metal Inert Gas (MIG) welder is to be used together with 5356 alloy wire.

h. Patching or plating material is to be either 5454 or 5083 alloy, with a tensile strength of H321.

22. Reassembly. To reassemble the water tank:

a. Position the hose trough and mounting bracket assemblies on the tank.

b. Install the retaining bolts, nuts and washers and torque them to 38–42 N.m (28–31 lbf.ft).

c. Position the ladder on the water tank.

d. Install and tighten the eight retaining bolts, nuts and washers.

e. Position the hatches and eye-bolts in the mounting brackets.

f. Install the pivot pins and secure them with new split pins.

23. Installation. To install the water tank:

a. Before installing the water tank, position the outlet pipes on the truck chassis as close as possible to their correct location.

b. Position the overhead lifting equipment above the water tank.

c. Connect slings to the two lifting eyes on the tank and to the lifting equipment then take up the slack.

d. Lift the tank and position it above the truck chassis mounting locations.

e. Lower the tank until it is approximately 200 mm (8 in) from the chassis.

f. Position a new gasket on the centre compartment outlet pipe flange.

g. Install the pipe into the tank.

h. Install the retaining nuts and new washers but do not tighten them at this stage.

i. Lower the tank gently onto the mounting cross-members.

j. Install the rear mounting pin. If necessary use the jemmy bar to rock the tank up and down to enable the rear mounting pivot pin to be installed.

k. Install the pivot pin retaining bolt and washer and torque the bolt to 185–200 N.m (136–148 lbf.ft).

l. Install a functional grease fitting into the pivot pin.

m. Position the felt washers and steel spacers onto the front mounting cross-shaft.

n. Smear the shaft with grease (XG-271).

o. Install the bearing housings onto the cross-shaft.

p. Position the bearing housing retaining bolts in the bolt holes.

q. Rock the tank up and down with the jemmy bar (located between the tank and the cross-shaft) while pushing the bolts into the holes.

r. Position the nuts with new lock-washers on the bolts, but do not tighten them as yet.

s. Repeat this procedure for the other side.

t. With both bearing housings installed, ensure that there is no gap between the bearing, the spacer and the mounting cheek plate. To do this, insert the jemmy bar between the mounting bracket on the chassis and the tank leg.

u. Lever the tank to one side, if a gap still exists, install a thicker spacer.

v. When the bearing housings are correctly installed, torque the nuts and bolts to 185–200 N.m (136-148 lbf.ft).

w. Position new gaskets on the front and rear compartment outlet pipe flanges.

x. Place the retaining nuts and new washers on the flange studs but do not tighten the nuts at this stage.

y. Reconnect the front section of the rear compartment outlet pipe to the rear section, using a new gasket and new washers, but do not tighten them at this stage.

z. Position the instruction panel on the tank mounting and install the retaining bolts and nuts.

aa. Torque the bolts and nuts to 38–42 N.m (28–31 lbf.ft).

bb. Fit the three outlet pipes to the instruction panel using the three pipe clamps but do not tighten the clamps at this stage.

cc. Install the pipe clamp securing the front section of the rear outlet pipe to the tank leg transfer brace but do not tighten the clamp at this stage.

dd. Position the three on/off-road control valves and the discharge manifold together with new gaskets on the outlet pipes.

ee. Install and torque the retaining bolts and nuts to 38–42 N.m (28–31 lbf.ft).

ff. Torque the nuts on each of the three compartment outlet flanges to 38–42 N.m (28–31 lbf.ft).

gg. Torque the bolts and nuts connecting the two sections of the rear outlet pipe to 38–42 N.m (28-31 lbf.ft).

hh. Tighten the pipe clamps securing the outlet pipes to the instruction panel and to the tank leg transfer brace.

ii. Reconnect the pump priming and bleed hoses to the tank and tighten the screw clamps securely.

jj. Install the pump start switch in the instruction plate panel and tighten the retaining nut securely.

kk. Position the pump start switch wiring on the outlet pipe and secure it in place with zip clamps.

ll. Fit the side clearance lights to the hose troughs and tighten the screws and nuts securely.

mm. Partially fill the three compartments of the water tank with water.

nn. Check for leaks at the various joints and connections and rectify any leak as necessary.

Water Pump and Outrigger Assembly

24. Removal. To remove the water pump and outrigger assembly:

a. Close the three on/off road control valves at the discharge manifold.

b. Open the three taps on the discharge manifold and remove the water pump drain plug.

c. Once the water has drained from the water pump and the flexible hoses, install and tighten the drain plug and close the taps.

d. Remove the four screws and nuts securing the jerry can holder to the water pump mounting bracket and remove the jerry can holder.

e. Unlock the cam-locks on the flexible hoses at the water pump and remove the hoses from the water pump.

f. Slacken the clamp securing the water pump priming hose to the ball valve on the water pump inlet and remove and plug the hose.

g. Slacken the clamp securing the water pump bleed hose to the pump outlet, remove the hose and plug it.

h. Remove the four nuts and washers securing the actuator to the keystone valve (Figure 26) and remove the actuator.

i. Stow the actuator on the truck chassis, taking care to avoid kinking or damaging the air lines.

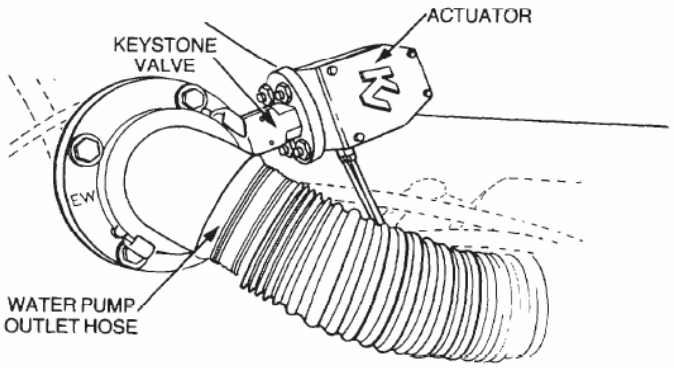

Figure 26 Keystone Valve and Actuator

j. Remove the four bolts and nuts securing the water pump shaft coupling guard to the water pump mounting bracket and remove the guard.

k. Remove the four bolts and nuts securing the water pump and outrigger assembly to the pump mounting bracket.

CAUTION

Take note of the shims and their locations. Shims must be placed in the same position on reassembly to prevent premature wear of the pump drive shaft coupling.

l. Remove the shims located beneath the pump and the outrigger assembly.

m. Slide the pump and outrigger assembly towards the rear of the truck to allow the coupling to disengage then remove the assembly from the truck.

NOTE

Due to the physical position of the water pump and outrigger, overhead lifting equipment cannot be utilized during the removal procedure. Accordingly, additional personnel will be required to remove the pump and outrigger assembly from the mounting bracket.

25. Disassembly. To disassemble the water pump and outrigger assembly:

a. Match mark the flanges to the Keystone valve and the outlet pipe to the delivery branch at the water pump outlet (Figure 27).

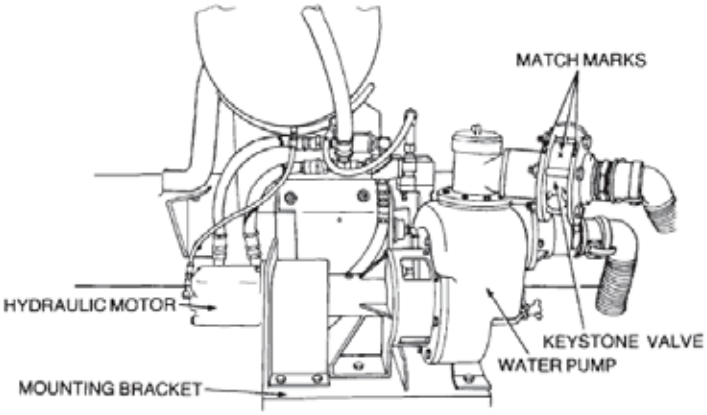

Figure 27 Keystone Valve Match Marks

b. Remove the bolts and nuts securing the two flanges and the Keystone valve together.

c. Remove the outer flange and the Keystone valve.

d. Match mark the delivery branch to the outlet pipe (Figure 28).

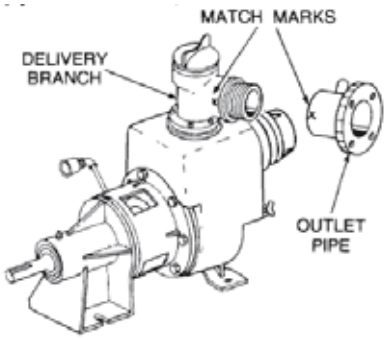

Figure 28 Outlet Pipe Removal

e. Using a pipe wrench, remove the outlet pipe from the delivery branch of the water pump.

f. Slacken the two screws on the head clamp assembly.

NOTE

Access to the screws is obtained through one of the openings in the adapter. If necessary, rotate the shaft to align the screws with the opening.

g. Match mark the outrigger to the adapter (Figure 29).

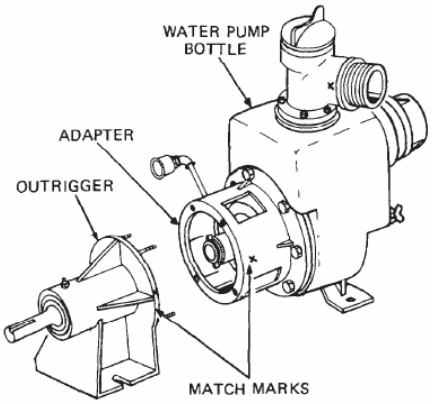

Figure 29 Outrigger Removal

h. Remove the nuts and washers securing the outrigger to the adapter and remove the outrigger, complete with the shaft, from the adapter and shaft extension.

i. Match mark the adapter to the bottle (water pump housing) (Figure 30).

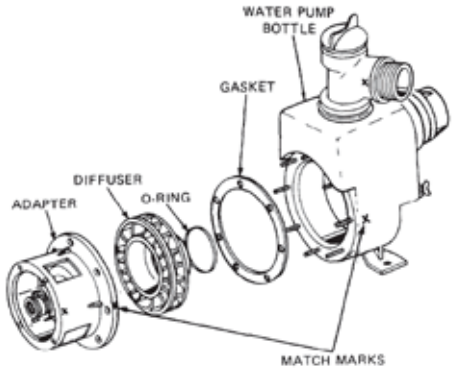

Figure 30 Adapter Removal

j. Remove the nuts and washers securing the adapter to the bottle and remove the adapter, complete with the extension shaft and impeller from the bottle and discard the gasket.

k. Remove the diffuser from the bottle and discard the O ring.

l. Insert a large screwdriver or lever between the blades of the impeller.

m. Remove the locknut, while holding the impeller with the screwdriver to prevent it from rotating.

n. Ease the impeller from the shaft by wedging evenly on each side until it clears the keyway (Figure 31).

o. Discard the locknut.

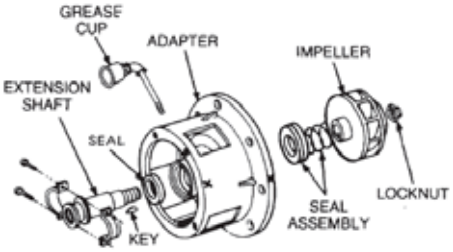

Figure 31 Adapter Assembly

p. Remove the extension shaft from the adapter and discard the seals.

q. Remove the Woodruff key from the shaft (Figure 31).

r. Remove the grease cap and the elbow from the grease tube on the adapter.

s. Remove the two wing nuts from the hand-hole cover (Figure 32).

t. Remove the cover and discard the O ring.

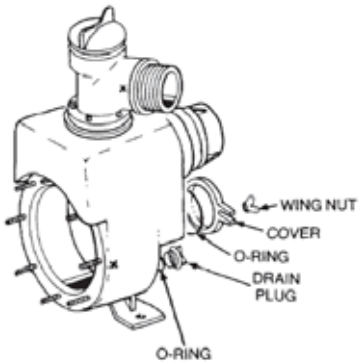

Figure 32 Cover Removal

u. Remove the drain plug and discard the O ring.

v. Match mark the delivery branch to the bottle, then remove the nuts and washers securing the delivery branch to the bottle and remove the delivery branch (Figure 33) and discard the gasket.

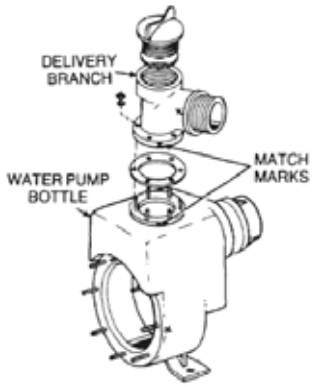

Figure 33 Delivery Branch Removal

w. Match mark the suction (inlet) cover to the bottle (Figure 34), then remove the six nuts and washers securing the cover to the bottle.

x. Remove the suction cover and the clacker (valve) assembly.

y. Disassemble the clacker assembly and discard the set screw, nut, washer and the rubber gasket.

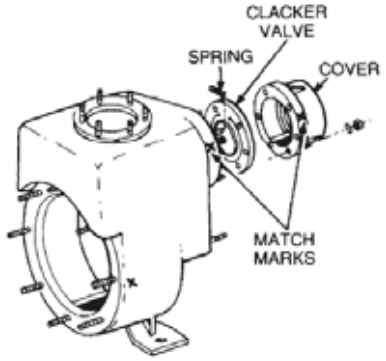

Figure 34 Suction Cover Removal

z. Using an Allen key, slacken the two grub screws securing the Fenner coupling to the drive shaft on the outrigger (Refer to Figure 35 for an exploded view of the outrigger).

aa. Remove the coupling then remove the key from the shaft.

bb. Remove the external circlips from both ends of the shaft.

cc. Remove the large internal circlip securing the bearing in the outrigger housing.

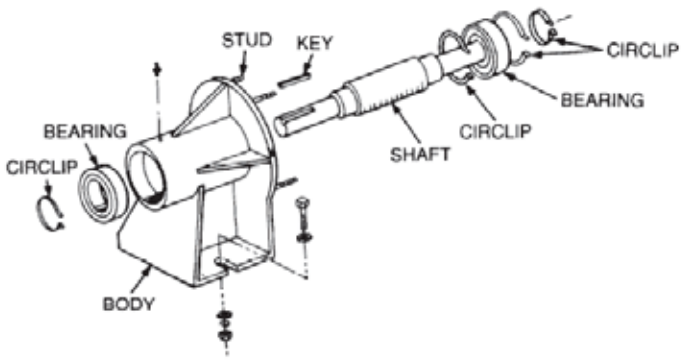

Figure 35 Outrigger Disassembly

dd. Position the outrigger in a press and remove the shaft by pressing it out from the impeller end (this will also push the front bearing out).

ee. Press the front bearing from the shaft.

ff. Using the press and a suitably sized piece of tubing, press the remaining bearing from the outrigger. If necessary, remove the inner circlip.

26. Cleaning and Inspection. To clean and inspect the water pump and outrigger assembly:

a. Remove any dirt or scale which may have formed in the water pump bottle then flush it with clean water.

b. Clean the bearings with a suitable cleaning agent (not kerosene) then blow them dry with clean moisture-free air.

c. Inspect the bearings for pitting or damage and replace them as necessary.

CAUTION

Do not spin the bearings with compressed air as this can cause damage.

d. Clean all other components with a recommended cleaning agent, ensuring that all gasket residue is removed and blow them dry with compressed air.

e. Inspect the impeller for cracks, chips or wear which may have occurred through the misalignment of the adapter and replace it if necessary.

f. Inspect the diffuser for cracks, chips or wear on the impeller running area and replace it if necessary.

g. Inspect the clacker return spring for damage or wear and replace it if necessary.

h. Inspect the drive shaft and drive shaft extension and replace them if bent or damaged.

i. Inspect the adapter and outrigger housings and replace them if damaged.

27. Reassembly. To reassemble the water pump and outrigger assembly:

a. Pack the outrigger bearings with XG-291 grease.

b. Fill the outrigger housing 1/3 to 1/2 full with XG-291 grease.

c. Install the inner circlip (if removed) then press the rear bearing (with the seals facing out) into the housing and against the circlip.

d. Install the outer circlip to retain the bearing in the housing.

e. Press the front bearing onto the drive shaft until it is firmly seated against the shoulder.

f. Position the drive shaft in the outrigger housing, aligning the drive shaft with the inner race of the rear bearing.

g. Place an adapter, which seats flush on both the inner and outer races of the front bearing, then press the front bearing and shaft into the housing (while supporting the inner race of the rear bearing) until the shoulder on the shaft butts against the rear bearing.

h. Remove the assembly from the press and install the external circlip onto the drive shaft.

i. Insert the key into the shaft then install the Fenner coupling.

j. Using an Allen key, tighten the two grub screws to secure the coupling to the drive shaft.

k. Install a new grease seal and a new mating face for the water seal into the adapter.

l. Smear the extension shaft with XG-291 grease then install the shaft into the adapter.

m. Install the head clamp onto the extension shaft but do not tighten it.

n. Align the drive shaft in the outrigger, with the extension shaft in the adapter and align the match marks on the two housings.

o. Join the two housings together and install the retaining nuts and washers then torque them to 38-42 N.m (28–31 lbf.ft.).

p. Using a vernier calliper or depth gauge, measure the distance between the water seal mating face and the shoulder on the extension shaft (Figure 36). The distance should be between 23.11–23.63 mm (0.910–0.930 in.).

NOTE

If necessary, move the extension shaft either in or out to obtain the correct dimension. When the correct dimension is obtained, tighten the two screws on the head clamp to hold both shafts in position.

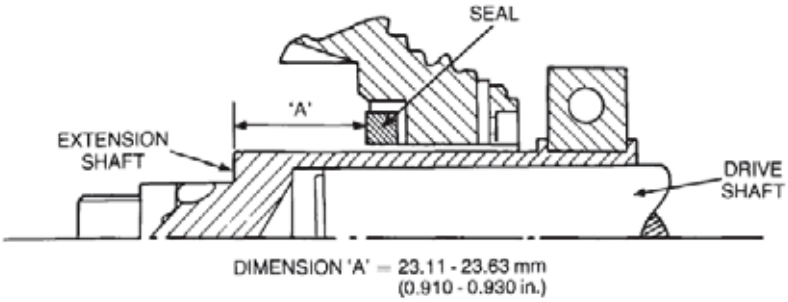

Figure 36 Seal to Impeller Measurement

q. Install a functional Woodruff key in the extension shaft.

r. Check that the water seal mating face is clean and free from grease.

s. Install the water seal, ensuring that the carbon seal sits square on the mating face.

t. Align the keyway in the impeller with the key on the shaft.

u. Push the impeller onto the shaft.

v. Insert a large screwdriver between the blades of the impeller.

w. Install a new locknut and tighten it down firmly, while holding the impeller with the screwdriver to prevent it from turning.

x. Seat the diffuser over the impeller and onto the spigot of the adapter so that the adapter stop is clear of the diffuser blade.

y. Ensure that the mating surfaces on the bottle and the adapter are clean, then smear them both with XG-291 grease.

z. Position the gasket on the adapter then align the match marks on the bottle and the adapter and slide the bottle over the diffuser and adapter.

aa. Install the nuts and washers securing the adapter to the bottle and torque the nuts to 38–42 N.m (28-31 lbf.ft.).

bb. Install the grease cap and elbow onto the grease tube on the adapter.

cc. To assemble the clacker, position the weight on a new rubber gasket and secure it in place using a new setscrew, nut and washer. Do not over tighten the setscrew, as the gasket may distort and prevent the valve from sealing. Stake the nut to the setscrew to prevent it working loose.

dd. Position the clacker return spring in the bottle, ensuring that the spring prongs enter into the drilled holes in the bottle, then position the rubber gasket (with the weight to the inside) over the spring.

ee. Install the suction cover (aligning the match marks) over the gasket and secure it in place with the six nuts and washers.

ff. Tighten the nuts securely and evenly but do not over tighten, otherwise the rubber gasket can become distorted and prevent the valve from sealing properly.

gg. Position a new gasket on the outlet port of the bottle.

hh. Place the outlet branch on the bottle, ensuring that the match marks are correctly aligned.

ii. Install the retaining nuts and washers and torque the nuts to 38–42 N.m (28–31 lbf.ft.).

jj. Apply thread sealing tape to the threads on the outlet branch then install the outlet pipe.

kk. Tighten the pipe with a pipe wrench to align the match marks.

ll. Align the match marks on the flow control valve and the outer flange with the flange on the outlet branch pipe.

mm. Install the bolts nuts and washers and torque them to 180–200 N.m (134–148 lbf.ft.).

nn. Install a new O ring on the hand-hole cover, install the cover and secure it in place with the two wing nuts.

oo. Install a new O ring on the drain plug and install the drain plug.

28. Installation. To install the water pump and outrigger assembly:

NOTE

Due to the physical position of the water pump and outrigger, overhead lifting equipment cannot be utilized during the installation procedure. Accordingly, additional personnel will be required to install the pump and outrigger assembly onto the mounting bracket.

a. Position the pump and outrigger assembly on the mounting bracket towards the rear of it. Ensure that the rubber insert is in position in the Fenner coupling, then slide the pump and outrigger assembly forward.

b. Align the lugs in the coupling with the slots in the rubber insert, then push the pump and outrigger assembly to engage the Fenner coupling.

c. Align the retaining bolt holes then install the shims in their correct locations as noted at removal.

d. Install the retaining bolts, nuts and washers and torque them to 94–105 N.m (69–77 lbf.ft).

e. Check that the Fenner coupling is correctly aligned by placing a straight edge axially on the coupling, on the top, the bottom and the two sides to ensure that the two halves of the coupling are square with each other, to within 0.45 mm (0.018 in.). If necessary, add or remove shims under the water pump and actuator assembly to achieve the correct alignment of the coupling.

f. Rotate the Fenner coupling and check that the backlash within the coupling is equal when checked at several different degrees of location.

g. Position the guard over the Fenner coupling.

h. Install the four bolts, nuts and washers and torque them to 38–42 N.m (28–31 lbf.ft).

i. In turn, remove the plugs from the bleed and priming hoses, then reconnect the hoses to the water pump outlet and to the ball valve on the water pump inlet respectively and securely tighten the screw clamps.

j. Position the actuator on the Keystone valve then install and tighten the four nuts and washers.

k. Position the jerry can holder on the pump mounting bracket, then install the screws, nuts and washers and torque them to 19–21 N.m (14–15 1bf.ft).

l. Reconnect and lock the two flexible hoses in their respective positions on the water pump.

m. Open the three on/off-road valves at the discharge manifold and check for water leaks at the pump and rectify any leaks as necessary.

CAUTION

Do not run the pump dry. The self adjusting water seal requires water for both cooling and lubrication or it will burn out.

n. Start the engine, operate the water pump and check it for correct operation.

Keystone Valve Actuator

29. Removal. To remove the keystone valve actuator:

a. Drain the air from the brake system primary air reservoirs; then close the drain cocks.

b. Crack loose the two air line connections at the actuator to allow any residual pressurized air to escape, then disconnect, plug and tag the air lines for correct locating at reassembly.

c. Remove the four nuts and washers securing the actuator to the Keystone valve and remove the actuator.

30. Disassembly. To disassemble the keystone valve actuator:

a. Remove the four screws and washers securing each end-cap to the actuator body and remove the end-caps (Figure 37).

b. Match mark or tag the end-caps for correct location at reassembly and discard the O rings.

NOTE

Unless replacement is required, it is unnecessary to remove the grub screws from the end-caps.

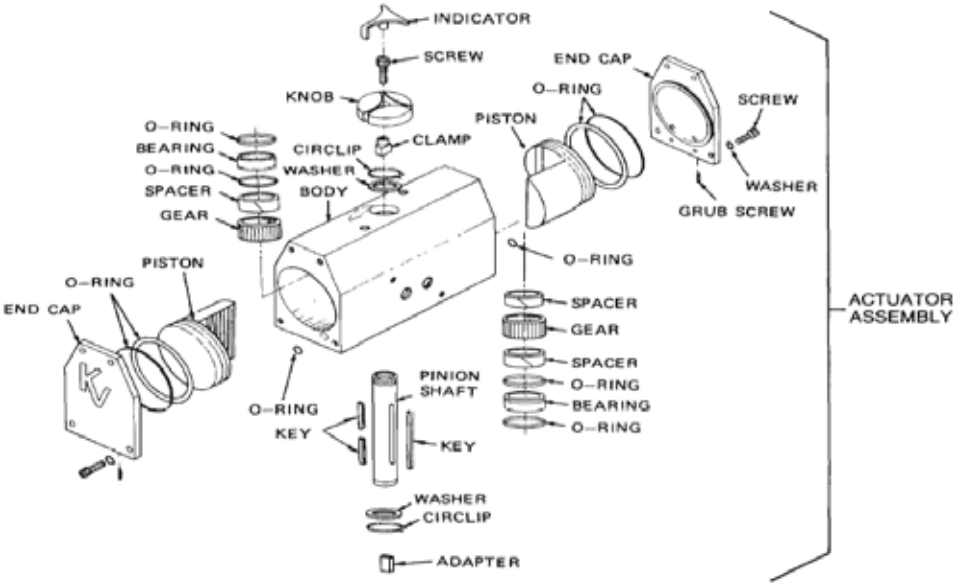

Figure 37 Keystone Valve Actuator – Exploded View

c. Rotate the pinion shaft in an anticlockwise direction to drive the pistons outward.

d. Remove the pistons from the actuator.

e. Remove the O rings from the pistons and discard them.

f. Remove the split spacer from between the gears on the pinion shaft.

g. Pry the indicator arrow from the knob at the top of the actuator body.

h. Slacken the socket-head screw approximately 9 mm (3/8 in.).

i. Tap the screw into the knob to release the expanding plug, which secures the knob to the pinion shaft.

j. Lift the knob from the pinion shaft.

k. Remove the circlip and washer from the top of the actuator body.

l. Using a soft drift and hammer, carefully tap the pinion shaft downwards.

m. Remove the pinion shaft, leaving the gears, spacers and bearings in the actuator body.

n. Remove the gears, spacers and bearings from the actuator body.

31. Cleaning and Inspection. To clean and inspect the keystone valve actuator:

a. Clean all components with a recommended cleaning agent then blow them dry with compressed air.

b. Inspect the bores of the actuator body for scoring or excessive wear and replace them as necessary.

c. Check the piston for wear or scoring on the outside diameter or excessive wear on the gear teeth and replace them as necessary.

d. Inspect the gears, spacers and bearings for damage or wear and replace them as necessary.

e. Inspect the pinion shaft and keys for damage or wear and replace them as necessary.

32. Reassembly. To reassemble the keystone valve actuator:

a. Lightly smear a pinion shaft bearing with silicone grease, then position the bearing, with new O rings on either side, onto the bottom end of the pinion shaft.

b. Install a retaining washer and a circlip onto the bottom end of the pinion shaft.

c. Install the bottom spacer onto the shaft then position the keys in the shaft.

d. Partially insert the shaft into the actuator body, from the bottom then position the gears on the shaft.

e. Push the shaft fully into the actuator body then install the split spacer between the gears.

f. Install the top spacer onto the pinion shaft then install a new O ring.

g. Lightly smear the top bearing with silicone grease then position the bearing on the pinion shaft.

h. Position a new O ring onto the pinion shaft then install the retaining washer and circlip.

NOTE

Difficulty may be encountered when attempting to install the top circlip. The use of a press and a suitable arbour (with a cutaway to gain access to the circlip) positioned on the top washer, will enable the top circlip to be correctly installed. Ensure **light pressure only** is carefully applied, to avoid damaging the O rings.

i. Position new O rings on the pistons, then grease the actuator body bore, the gear teeth and the pistons with XG-291 or equivalent.

j. Position the pistons (orientated as shown in Figure 37), in the actuator body then push the pistons into the bore until the piston racks mate with the gear teeth.

k. Rotate the pinion shaft through 90 degrees in a clockwise direction. In this position, the flats on the pinion shaft should be at right angles to the actuator body axis.

l. Fit new O rings onto the end-cap spigots then install new O rings into the air passage recesses in the actuator body.

m. Lightly grease the end-caps with XG-291 or equivalent, position the end-caps on the actuator body then install and evenly tighten the retaining screws.

33. Installation. To install the keystone valve actuator:

a. Insert the adapter into the bottom of the actuator pinion shaft.

b. Position the actuator assembly on the Keystone valve flange then install and tighten the four retaining nuts and washers.

c. Correctly position the knob on the pinion shaft, ensuring that the indicator arrow will be pointing to the closed position.

d. Screw down the socket-head screw, to expand and lock the clamp against the knob.

e. Insert the indicator arrow into the knob.

f. Remove the plugs and install the air lines into their correct positions and tighten the connections securely.

g. Start the truck engine and allow the air pressure in the brake system to build-up.

h. Operate the pump discharge switch and check that the actuator functions correctly and that there are no air leaks.

i. Switch off the pump discharge switch and shut down the engine and rectify any air leaks as necessary.

Keystone Valve

34. Removal. To remove the Keystone valve:

a. Close the water pump priming hose valve at the pump inlet and close the three on/off-road valves at the discharge manifold.

b. Remove and plug the pressure relief hose from the pump outlet (Figure 38) then open the three taps on the discharge manifold to drain the water from the flexible hoses.

c. Unlock the cam-lock on the flexible hose of the water pump outlet and disconnect the hose from the pump.

d. Remove the four nuts and washers securing the actuator to the Keystone valve (Figure 38) then remove the actuator from the valve and stow it on the chassis rail, taking care to avoid damaging or kinking the two air lines.

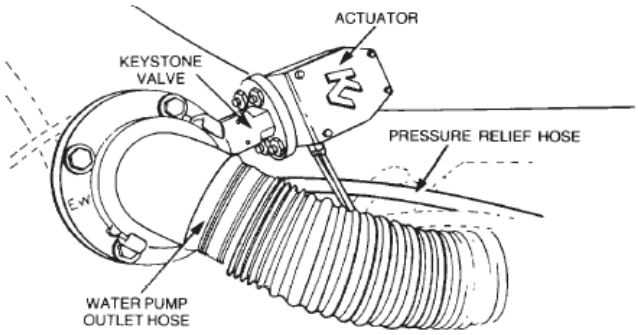

Figure 38 Keystone Valve and Actuator

e. Match mark the Keystone valve to the flanges (Figure 39) then remove the four bolts, nuts and washers, while supporting the outer flange and the Keystone valve.

f. Remove the Keystone valve from the outlet flange.

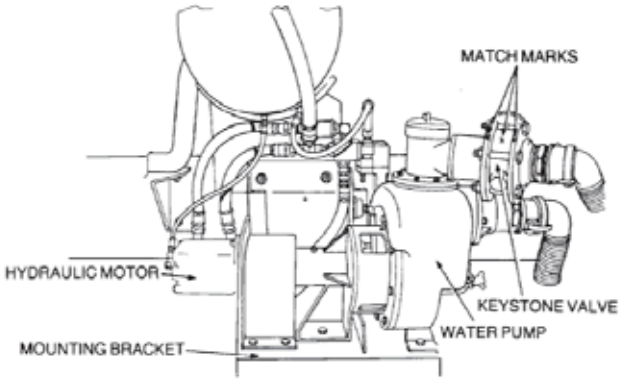

Figure 39 Keystone Valve Match Marks

35. Disassembly. To disassemble the Keystone valve:

a. Remove the screws securing the disc to the shaft (Figure 40) and discard the O rings.

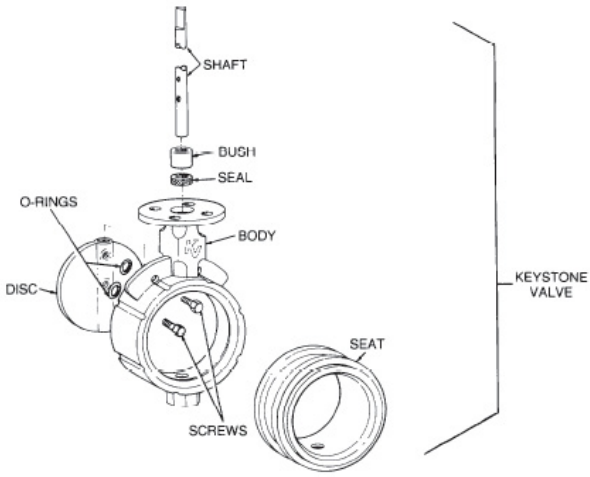

Figure 40 Keystone Valve – Exploded View

b. Secure the end of the shaft in a soft jawed vice then using a soft head hammer; remove the valve body from the shaft by tapping it off.

c. Push the valve disc out from the seat, taking care not to damage the edges of the disc.

d. Collapse the disc seat and remove it from the valve body.

e. Discard the disc seat.

f. Remove the shaft seal and the bush from the valve body.

NOTE

In the event of a shaft bush being difficult to remove, immerse the valve body in hot water [approximately 85°C (185°F)] for twenty minutes to facilitate removal.

36. Reassembly. To reassemble the Keystone valve:

a. Install a new disc seat in the valve body, aligning the shaft holes.

b. Lightly smear both the bush and seal with XG-291 grease.

c. Install the seal, then the bush into the valve body.

d. Position the disc in the disc seat, taking care not to damage the edges of the disc.

e. Position the shaft in the valve body with the flat section of the shaft towards the top.

f. Align the disc, then push the shaft into the valve body and disc until the screw holes in the disc align with the screw holes in the shaft.

g. Install new O rings on the disc retaining screws.

h. Install and torque the screws to 16 N.m (11 lbf.ft).

i. Check the valve for free operation.

37. Installation. To install the Keystone valve:

a. Position the outer flange and Keystone valve on the outlet flange and align the match marks.

b. Install the four bolts, nuts and washers, and torque them to 185–200 N.m (134–148 lbf.ft).

NOTE

Ensure that the valve still operates freely.

c. Position the actuator assembly over the valve assembly then install and tighten the four retaining nuts and washers.

d. Reconnect and lock the flexible hose to the water pump outlet and close the three taps on the discharge manifold.

e. Open the appropriate on/off-road control valve at the discharge manifold.

CAUTION

Do not run the pump dry. The self adjusting water seal requires water for cooling and lubrication or it will burn out.

f. Start the truck engine and allow the air in the brake system to build up.

g. Engage the PTO and open the spraybar or spray head (if fitted) discharge control valve.

h. Turn on the pump start switch.

i. Operate the pump discharge switch on and off several times to ensure that the Keystone valve is functioning correctly.

j. Switch off the pump start switch and the pump discharge switch.

k. Disengage the PTO and shut down the engine.

l. Close the spraybar or spray head (if fitted) discharge control valve.

On/Off Road Control Valves

38. Removal. To remove the on/off road control valves:

a. Completely drain the three compartments in the water tank.

b. Disconnect the flexible hose from the discharge manifold.

c. Suitably support the discharge manifold.

d. Remove the bolts, nuts and washers securing the discharge manifold and the on/off road valves to the outlet pipes.

e. Remove the manifold and the on/off road valves.

39. Disassembly. To disassemble the on/off road control valves:

a. Remove the nut and bolt securing the handle assembly to the shaft and remove the handle assembly (Figure 41).

b. Remove the roll pin securing the locking lever to the handle and remove the locking lever and spring.

c. Remove the bolts and locknuts securing the disc to the shaft.

d. Secure the end of the shaft in a soft jawed vice then remove the valve body from the shaft by tapping the top plate of the valve body with a soft head hammer.

e. Turn the valve disc 90 degrees to the valve body then roll the disc out from the valve seat.

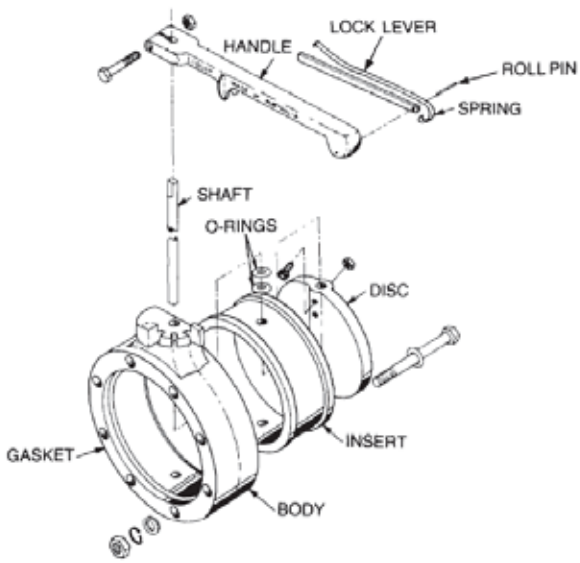

Figure 41 On/Off Road Control Valve – Exploded View

f. Using a small screw driver or similar, pry the two O rings out from the shaft bore in the valve body and discard them.

g. Collapse the seat insert and remove it from the valve body.

h. Discard the seat insert.

40. Cleaning and Inspection. To clean and inspect the on/off road control valves:

a. Clean all parts with a recommended cleaning agent.

b. Check the valve body and disc for cracks, burrs, damage or wear and replace parts as necessary.

c. Inspect the shaft for wear or damage and replace it as necessary.

d. Check the locking lever return spring for damage or loss of tension and replace it as necessary.

41. Reassembly. To reassemble the on/off road control valves:

a. Install a new insert into the valve body, ensuring that the shaft holes in the insert align with those in the valve body.

b. Push the valve disc into the insert, aligning the shaft holes and ensuring that the securing bolt holes are towards the top.

c. Install two new O rings into the shaft bore of the upper valve body.

d. Smear the shaft with rubber grease then insert the shaft into the valve body and disc, taking care not to dislodge the O rings.

e. Align the two bolt holes in the disc with those in the shaft.

f. Install the two bolts together with new locknuts and tighten them securely.

g. Check that the disc operates freely.

h. Install the locking lever and spring into the handle and insert a new roll pin.

i. With the disc in the closed position, correctly locate the handle assembly on the shaft.

j. Install the pinch bolt and nut and torque it to 10–12 N.m (7.4–8.8 lbf.ft).

42. Installation. To install the on/off road control valves:

a. Position the three on/off-road control valves and the discharge manifold together with the new gaskets on the outlet pipe flanges.

b. Install and torque the retaining bolts and nuts to 38–42 N.m (28–31 lbf.ft).

c. Reconnect the flexible hose to the discharge manifold.

d. Partially fill each compartment of the tank with water and check for water leaks at the valves in both the ON and OFF positions.

Hydraulic Pump

43. Removal. To remove the hydraulic pump:

a. Clean the pump and the hose connections, then blow them dry with compressed air.

b. Slacken the screw clamp on the supply hose.

c. Remove and plug the hose and pump with suitable plastic plugs.

d. Remove the pressure hose and plug both the hose and the pump housing with suitable plastic plugs.

e. Match mark the pump to the PTO.

f. Remove the four nuts and washers from the pump adapter flange and remove the pump.

44. Disassembly. To disassemble the hydraulic pump:

a. Match mark the front and rear covers to the seal plate.

b. Remove the eight nuts and washers which secure the front cover, seal plate and rear cover together.

c. Remove the front cover then remove the two seals and the circlip from the cover (Figure 42).

d. Discard both seals and the front gasket.

e. Remove the seal plate then remove and discard the balance seal, the back-up seal, the rear gasket and the rear thrust plate.

f. Remove the drive gear and idler gear.

g. Remove and discard the rear thrust plate.

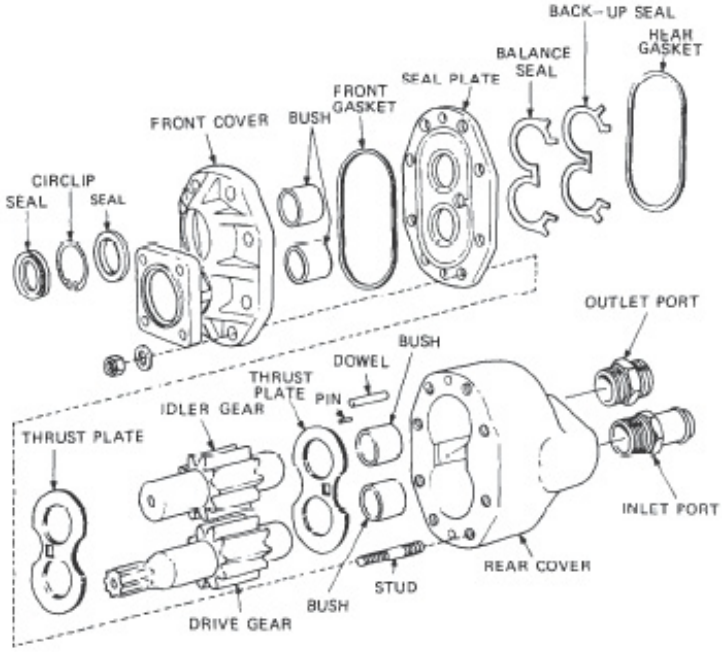

Figure 42 Hydraulic Pump – Exploded View

h. If necessary, the two dowels, the eight studs and the locating pin may be removed from the rear cover.

i. Using a suitable bush puller, remove the two bushes from the front cover then remove the two bushes from the rear cover.

45. Cleaning and Inspection. To clean and inspect the hydraulic pump:

a. Clean all components using a recommended cleaning agent. Ensure that no gasket residue is left on the front cover, seal plate or rear cover.

b. Check the sealing surfaces of the front cover, seal plate and rear cover for nicks, burrs and scoring and replace them as necessary.

c. Check the bushes for nicks, burrs and scoring as well as elongation and replace them as necessary.

d. Check the gear teeth and shaft of the idler gear for damage or signs of excessive wear and replace it if necessary.

e. Check the gear teeth, shaft and splines of the drive gear for damage or signs of excessive wear and replace it if necessary.

f. Check the inlet and outlet port connectors for fractures or damage and replace them as necessary.

g. Check the studs, locating pin and dowels for damage or signs of excessive wear and replace them as necessary.

46. Reassembly. To reassemble the hydraulic pump:

NOTE

Always use new seals and gaskets during reassembly.

a. Lubricate the four bushes with hydraulic fluid (OM-65).

b. Using a suitable adapter, press two bushes into the housings in the rear cover and the other two bushes into the housings in the front cover.

c. Install the two dowels, the eight studs and the locating pin in the rear cover, if they were removed during disassembly.

d. Install the new rear thrust plate into the rear cover so that the bronze face is toward the gears.

NOTE

Ensure the window in the rear thrust plate is positioned as illustrated in Figure 42.

e. Install the new balance seal, back-up seal and rear gasket respectively in the grooves provided in the seal plate.

f. Ensure that the seal plate-to-rear cover match marks will align then position the new front thrust plate on the seal plate so that the bronze face is toward the gears.

NOTE

Ensure the window in the front thrust plate is positioned as illustrated in Figure 42.

g. Lubricate the drive gear and idler gear with hydraulic fluid (OM-65).

h. Install the two gears in the seal plate (orientated as shown in Figure 42).

i. Slide the complete assembly into the rear cover, aligning the match marks and the locating pin.

NOTE

Ensure that the rear gasket and seals remain correctly seated in the seal plate grooves.

j. Fit a new front gasket in the groove on the seal plate.

k. Lubricate the sealing surfaces of the two seals with hydraulic fluid (OM-65) then install the seals and circlip into the front cover.

l. Align the match marks then fit the front cover to the seal plate and rear cover assembly, carefully aligning the two gears with their mounting bushes and the securing studs with the mounting holes in the front cover.

m. Fit the eight washers and nuts to the studs and torque them to 85–95 N.m (63–70 lbf.ft).

47. Installation. To install the hydraulic pump:

a. Clean the mounting faces on the pump and PTO.

b. Position a new gasket on the PTO, align the PTO-to-pump match marks and install the pump.

c. Install the retaining nuts and washers and torque them to 34–38 N.m (25–28 lbf.ft).

d. Remove the plastic plugs and install the hoses.

e. Securely tighten the pressure hose connection and the supply hose screw clamp.

48. Testing. To test the hydraulic pump:

a. Remove the hydraulic input line from the interface (Figure 43) and install a 15 000 kPa (2175 psi) pressure gauge and a 150 L/min. (33 gal/min.) flow meter in series with the hydraulic line and the interface.

b. Tighten all connections.

c. Start the truck engine and set the engine speed to 1000 rpm.

d. Engage the PTO.

e. After ten minutes operation, check that the pressure indicated is approximately 10 600 kPa (1540 psi) and the flow rate is approximately 102 L/min. (22.5 gal/min.).

f. Check for any leaks around the pump.

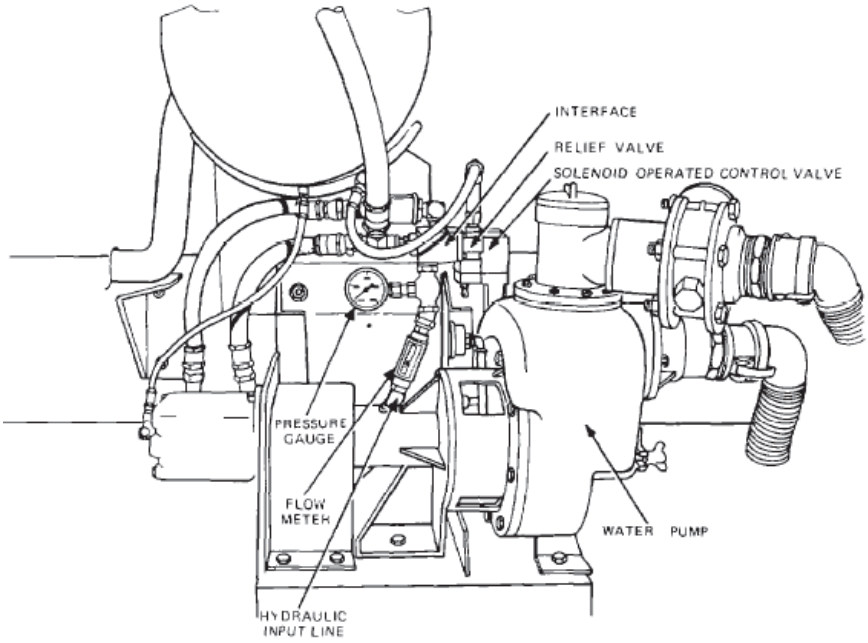

Figure 43 Location of Hydraulic Input Line

g. Release the throttle, disengage the PTO and shut down the engine.

WARNING

Before disconnecting the pressure and flow rate meters, ensure that the hydraulic fluid is sufficiently cool to avoid burns.

h. Remove the hydraulic line input from the test meters then remove the meters.

i. Connect the hydraulic line to the input of the interface and check for leaks and rectify it as necessary.

j. Check the fluid level in the oil reservoir, if necessary, top up with OM-65.

Hydraulic Motor

49. Removal. To remove the hydraulic motor:

NOTE

To remove the hydraulic motor, it is necessary to firstly remove the water pump and outrigger assembly (Para 24).

a. Clean the hydraulic motor and hose connections with a recommended cleaning agent then blow them dry with compressed air.

b. Close the gate valve at the oil reservoir outlet.

c. Slacken the hose connection at the filter.

d. Place a receptacle beneath the hydraulic motor, then remove the case drain hose and elbow from the front of the motor.

e. Insert plastic plugs into the hose and the port in the motor.

f. Remove the bolts securing the flanges of the pressure supply and return hoses to the pump (Figure 44).

g. Discard the O rings then plug the hoses and the ports in the motor with plastic plugs.

h. Match mark the two halves of the motor and the motor flange to the mounting bracket (Figure 44).

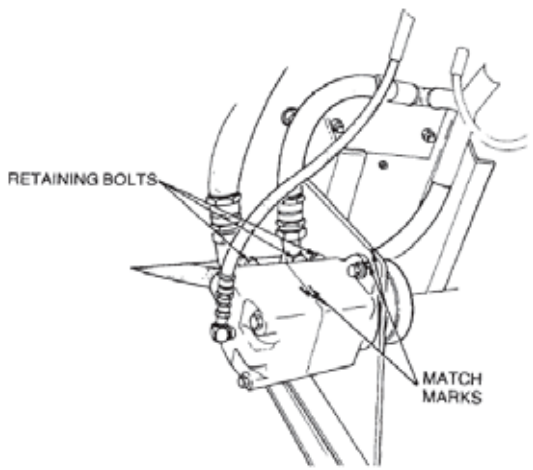

Figure 44 Hydraulic Motor

i. Using an Allen key, slacken the two grub screws securing the Fenner coupling to the drive shaft on the motor.

j. Remove the coupling and remove the Woodruff key from the shaft.

k. Support the motor and remove the two bolts securing the motor to the mounting bracket.

l. Remove the motor from the mounting bracket to a clean working area.

50. Disassembly. To disassemble the hydraulic motor:

a. Remove the four bolts securing the two halves of the motor together.

b. Separate the cover from the body and discard the back-up ring and the O ring.

NOTE

The pressure plates, bush, rotor, vanes, ring and adapter make up a complete assembly labelled 'cartridge kit'. The hydraulic motor should therefore not be disassembled beyond replacement of the cartridge, adapter, shaft, seal or bearing (Figure 45).

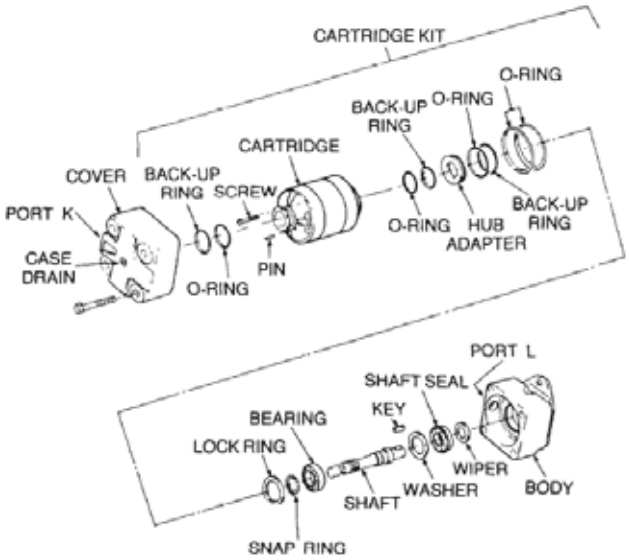

Figure 45 Hydraulic Motor – Exploded View

c. Remove the cartridge assembly from the body.

d. Remove the hub adapter from the body and discard the O rings and back-up rings.

e. Remove the lock ring and withdraw the shaft from the body.

f. Remove the washer then press the seal and wiper from the body.

g. Discard the seal and wiper.

h. Remove the snap ring then press the bearing from the shaft.

51. Cleaning and Inspection. To clean and inspect the hydraulic motor:

a. Clean the bearing with a recommended cleaning agent then blow it dry with compressed air.

b. Inspect the bearing for pitting or damage and replace it as necessary.

CAUTION

Do not spin the bearings with compressed air as this can cause damage.

c. Clean the cover, body and shaft with a recommended cleaning agent then blow them dry with compressed air.

d. Inspect the body and cover for wear or damage or erosion in or around the ports.

e. Check the shaft for bends, twist, wear or damage and replace it as necessary.

f. Check the bush and the splines within the cartridge for wear or damage and replace the cartridge as necessary.

g. Check the condition of the two cartridge locating pins in the cover and ensure they fit neatly into the cover without excessive side play. If necessary replace the pins and/or the cover.

52. Reassembly. To reassemble the hydraulic motor:

a. Install a new wiper and shaft seal into the body.

NOTE

Ensure that the sealing lip of the seal is facing toward the inside of the motor.

b. Press the bearing onto the shaft until it butts against the shoulder then install the snap ring.

c. Smear the sealing lip of the seal and the seal running surface on the shaft with clean hydraulic fluid (OM-65) then install the shaft into the body.

d. Install the lock ring into the body to secure the shaft in place.

e. Install a new O ring and back-up ring onto the hub of the rear pressure plate then smear them with clean hydraulic fluid (OM-65).

f. Install a new O ring and back-up onto the adapter then install the adapter over the O ring and back-up ring on the hub of the rear pressure plate.

g. Install a new O ring and back-up ring onto the hub of the front pressure plate.

h. Ensure that the two locating pins are correctly installed in the cover.

i. Immerse the cartridge assembly in clean hydraulic fluid (OM-65) for several minutes to ensure it is completely lubricated internally.

j. Remove the cartridge from the fluid and position it over the shaft and into the body, ensuring that the hub adapter is correctly seated in the body.

k. Install new O rings into the body and cover mating surfaces.

l. Position the cover over the cartridge (aligning the locating pins) and push it against the mating surface of the body.

m. Align the match marks on the cover and body.

n. Install the four bolts and torque them to 130–145 N.m (96–107 lbf.ft).

o. Plug the ports in the motor with suitable plastic plugs to prevent the ingress of dust or dirt into the motor during installation.

53. Installation. To install the hydraulic motor:

a. Position the motor in the mounting bracket, aligning the match mark on the flange with that on the bracket.

b. Install the two retaining bolts and torque them to 95–105 N.m (70–77 lbf.ft).

c. Ensure that the pressure supply and return hose connections are clean then remove the plugs from the hoses and ports.

d. Install new O rings and reconnect the hoses to the motor.

e. Torque the retaining bolts to 55–60 N.m (40–44 lbf.ft).

f. Ensure the case drain hose connection is clean then apply thread sealing tape to the external threads on the elbow.

g. Remove the plug from the motor cover and install the elbow.

h. Remove the plug from the hose and reconnect the hose then tighten the connection securely.

i. Insert the Woodruff key into the driveshaft then slide the Fenner coupling into position.

j. Tighten the grub screws with an Allen key to lock the coupling onto the shaft.

k. Install the pump and outrigger assembly as detailed in Para 28.

l. Fill a new oil filter with clean, fresh hydraulic fluid (OM-65) and install it on the filter housing then tighten the hose connection at the filter.

m. Open the gate valve at the oil reservoir outlet then check that there is sufficient water in the tank to operate the pump.

n. Start the engine, engage the PTO and operate the water pump to ensure that the hydraulic motor is functioning correctly and to bleed air from the hydraulic system.

o. Switch off the pump, disengage the PTO and shut down the engine, check for leaks and rectify as necessary.

p. Check the hydraulic fluid level in the oil reservoir and if necessary, top up with OM-65.

Oil Reservoir

54. Removal. To remove the oil reservoir:

a. Close the gate valve at the base of the reservoir.

b. Place a suitable receptacle (minimum capacity 135 litres) beneath the hydraulic pump (PTO mounted), then disconnect the pump supply hose and plug the port in the pump with a plastic plug.

c. Open the gate valve and allow the hydraulic fluid to drain from the reservoir via the supply hose then remove the receptacle.

d. Remove the plastic plug from the pump and reconnect the supply hose then tighten the hose clamp securely.

e. Disconnect the supply hose from the gate valve and plug the hose with a plastic plug.

f. Disconnect the hydraulic fluid return hoses at the filter housing and at the base of the reservoir then plug the hoses with plastic plugs.

g. Remove the nuts from the end of the reservoir securing straps and remove the straps.

h. Remove the bolt, nut and washer from the bracket at the base of the reservoir on the right-hand side of the truck (Figure 46).

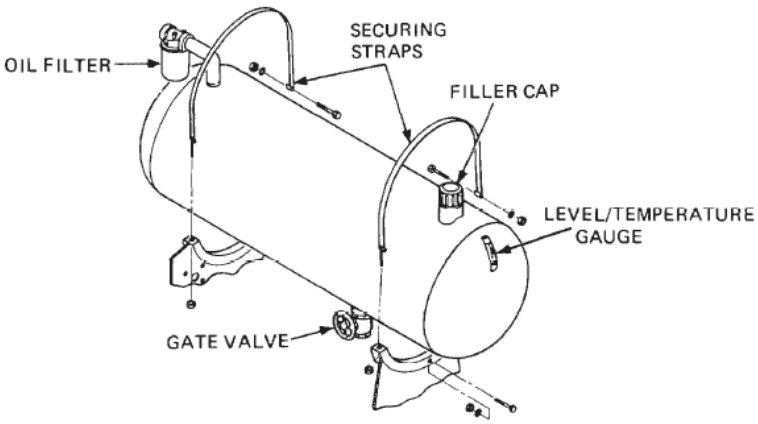

Figure 46 Hydraulic Oil Reservoir

i. Position overhead lifting equipment above the reservoir.

j. Secure slings around the reservoir and to the lifting equipment, then lift the reservoir up and clear of the truck.

k. Place the reservoir on suitable stands and remove the slings and lifting equipment.

55. Disassembly. To disassemble the oil reservoir:

a. Remove and discard the oil filter then unscrew the oil filter housing.

b. Remove the filler cap then remove the screws securing the strainer to the socket.

c. Remove the cap and strainer assembly from the reservoir (Figure 47).

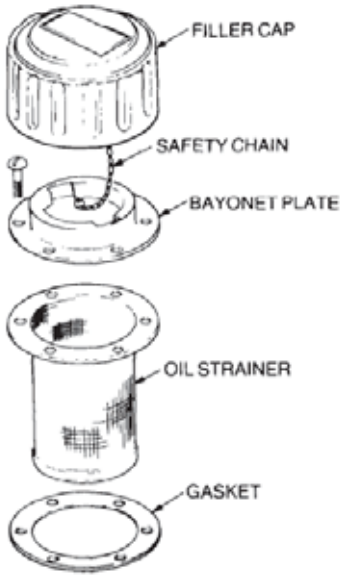

Figure 47 Filler Cap and Strainer Assembly

d. Using a suitable pipe wrench, remove the socket from the reservoir filler.

e. Remove the gate valve and the drain plug (if fitted) from the base of the reservoir.

f. Remove the cover from the level/temperature gauge, unscrew the bolts and remove the gauge.

56. Cleaning and Inspection. To clean and inspect the oil reservoir:

a. Clean the outside of the oil reservoir with a recommended cleaning agent.

b. Flush out the reservoir with clean, fresh hydraulic fluid (OM-65) to remove any contaminants in the reservoir.

c. Plug all the reservoir openings with plastic plugs until they are ready for installation.

d. Inspect the reservoir for cracks and fractures particularly around the inlet and outlet ports and repair it as necessary.

e. Clean and inspect the filler cap and strainer assembly, the filter housing and the gate valve for wear or damage and replace parts as necessary.

f. Check the condition of the level/ temperature gauge and replace it as necessary.

57. Reassembly. To reassemble the oil reservoir:

a. Apply thread sealing tape to the reservoir outlet port, the return port and to the filler neck.

b. Remove the appropriate plugs and install the outlet gate valve, the oil filter housing and the socket onto the filler neck and tighten the components securely.

c. Install the strainer assembly together with a new gasket into the reservoir, tighten the screws securely and install the filler cap.

d. Position the level/temperature gauge on the reservoir, install and tighten the retaining bolts then install the cover.

e. If previously removed, install and securely tighten the drain plug.

58. Installation. To install the oil reservoir:

a. Position the overhead lifting equipment over the reservoir and install the slings.

b. Lift the reservoir into position on the truck ensuring that the reservoir is correctly orientated then remove the slings and the lifting equipment.

c. Install the retaining bolt, nut and washer into the bracket at the base of the reservoir and torque it to 60-70 N.m (45–52 lbf.ft).

d. Position the straps over the reservoir, install the retaining nuts and tighten them securely.

e. Remove the plugs from the gate valve and the pump supply hose.

f. Connect the supply hose to the gate valve and tighten the clamp securely.

g. Remove the plugs from the fluid return hoses, the reservoir and the oil filter housing.

h. Reconnect the hoses to their correct positions and tighten them securely.

i. Fill a new oil filter with clean, fresh hydraulic fluid (OM-65) and install it on the filter housing.

j. Tighten the filter two-thirds of a turn by hand, after the sealing gasket contacts the adapter.

k. Fill the reservoir with approximately 135 litres of new hydraulic fluid (OM-65).

l. Open the gate valve at the base of the reservoir, then start the engine, engage the PTO and operate the water pump to bleed air from the system.

m. Check for oil leaks at the reservoir fittings and rectify as necessary.

n. Switch off the water pump, disengage the PTO and shut down the engine.

o. Check the fluid level in the oil reservoir and if necessary, top up with OM-65.

Solenoid Controlled Relief Valve Assembly

59. Removal. To remove the solenoid controlled relief valve assembly:

a. Using a recommended cleaning agent, clean the valve assembly, hose connections and the area around the valve assembly then blow them dry with compressed air.

b. Remove the four screws and nuts securing the jerry can holder to the water pump mounting bracket and remove the jerry can holder.

c. Crack loose the pressure hoses at the valve assembly (Figure 48), to allow any residual fluid (which may be under pressure) to drain off.

d. Disconnect and plug the hoses with plastic plugs.

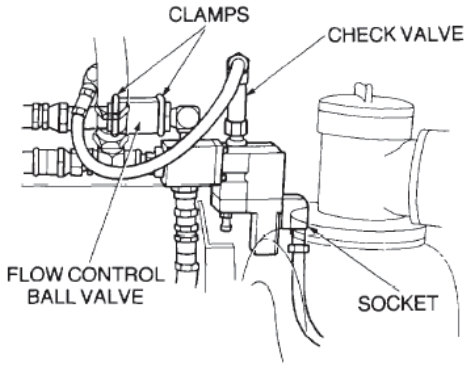

Figure 48 Solenoid Controlled Relief Valve

e. Unplug the electrical socket from the solenoid.

f. Remove the nuts and washers from the clamps securing the flow control valve to the reservoir mounting bracket.

g. Support the valve assembly then remove the clamps and the valve assembly from the truck.

h. Remove the hose connections and elbows from the interface and relief valve.

60. Disassembly. To disassemble the solenoid controlled relief valve assembly:

a. Match mark the solenoid, solenoid valve, the relief valve and the interface to ensure correct positioning at reassembly.

b. Remove the four socket-head bolts securing the solenoid valve to the relief valve.

c. Lift the solenoid valve from the relief valve.

d. Remove the four socket-head bolts from the relief valve and separate the relief valve from the interface.

e. Remove the four socket-head screws from the end cover on the solenoid valve and remove the end cover (Figure 49), then remove the O rings from the end cover and discard them.

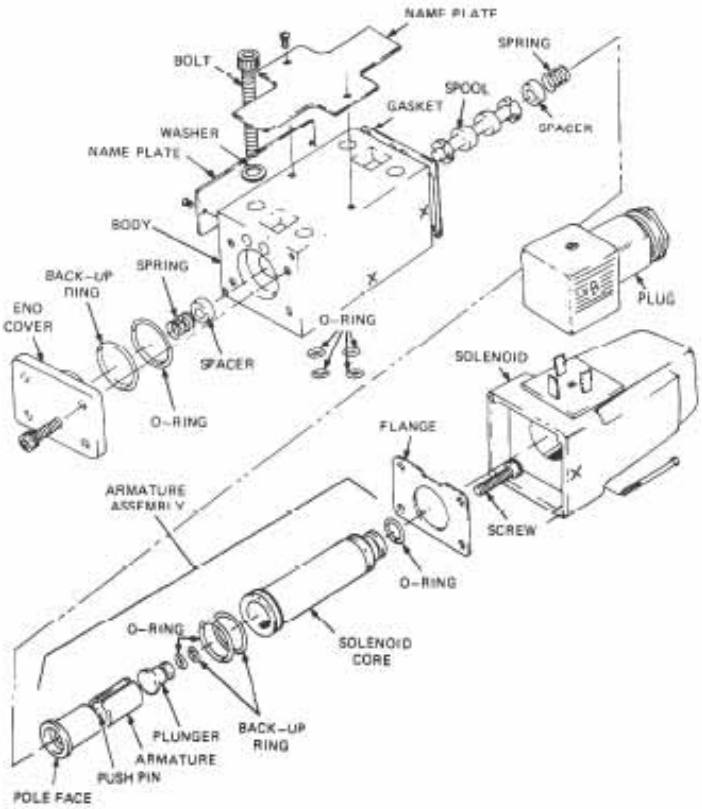

Figure 49 Solenoid Valve – Exploded View

f. Remove the spring and the spacer from the end of the spool.

g. Check the fit of the spool in the valve body. If excessive clearance is felt, replace the valve assembly.

h. Remove the spool from the valve body.

i. Remove the screws securing the solenoid to the valve body and remove the solenoid.

j. Remove the four screws securing the flange to the valve body and remove the flange.

k. Remove and disassemble the armature assembly.

l. Discard the gasket and O rings.

m. Slacken the locknut at the adjusting screw on the relief valve.

n. Remove the adjusting screw and locknut (Figure 50).

NOTE

Take note of the number of turns required to remove the adjusting screw, for use when calibrating the relief valve at installation.

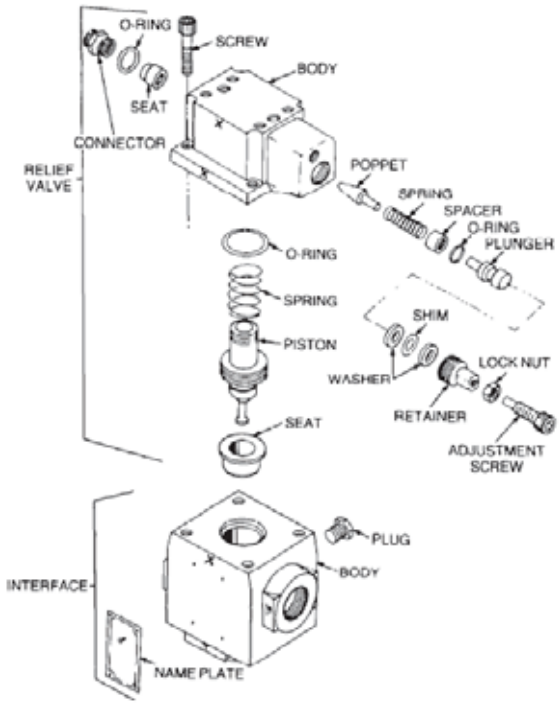

Figure 50 Relief Valve and Interface – Exploded View

o. Remove the retainer then remove the washers and shim, the plunger, O ring, spacer, spring and poppet from the valve body.

p. Remove the connector and the seat from the other end of the valve body.

NOTE

It will be necessary to use a hammer and soft drift to remove the seat.

q. Remove the spring, piston and seat from the interface.

NOTE

It may be necessary to use a hammer and soft drift to remove the piston seat.

61. Cleaning and Inspection. To clean and inspect the solenoid controlled relief valve assembly:

a. Clean all parts with a recommended cleaning agent then blow them dry with compressed air.

b. Discard all O rings and gaskets.

c. Check that the piston fits snugly into both the interface housing and the relief valve housing with no significant side movement.

NOTE

Excessive side movement or clearance will allow pressurized fluid to flow past the piston and back to the reservoir, by-passing the orifice and poppet valve and rendering the pressure relief valve system inoperative.

d. Examine the fluid passages for signs of erosion and replace parts as necessary.

e. Check the piston and the poppet springs for wear or damage and replace them as necessary.

f. Inspect the piston and seat and the poppet seat for wear or damage and replace parts as necessary.

g. Inspect the solenoid, the solenoid core and the internal components of the core for damage, wear or rust and replace the solenoid assembly as necessary.

NOTE

The solenoid is available only as a complete assembly. If the O rings only are to be replaced, they are supplied with the gasket kit.

62. Reassembly. To reassemble the solenoid controlled relief valve assembly:

a. Install the valve seats using a hammer and soft drift.

NOTE

Ensure that the seats butt firmly against the shoulders and that the orifice in the poppet valve seat faces away from the piston bore. If the poppet valve seat is not installed in this position, a whistling noise will be emitted when the valve is operating.

b. After installing the valve seats, flush the housing out with clean hydraulic fluid (OM-65).

c. Lubricate the piston and the piston bore in the interface housing with clean hydraulic fluid (OM-65), then assemble the piston and spring into the housing.

d. Install the poppet, spring, spacer, O ring, plunger, washers and shim into the valve body.

e. Coat the retainer threads with hydraulic fluid, then install and tighten the retainer.

f. Apply hydraulic fluid to the threads of the adjusting screw then install the adjusting screw together with the locknut into the relief valve.

g. Screw the adjusting screw into the housing the same number of turns noted when removing the adjusting screw (Para 60.n).

h. Position a new O ring in the recess in the interface then position the relief valve on the interface, aligning the match marks.

i. Install and torque the retaining bolts to 12.6 N.m (9.29 lbf.ft).

j. Install the check valve connector into the relief valve and tighten them securely.

k. Place a protective cover over the relief valve and interface assembly and set them aside until the solenoid valve has been reassembled.

l. Lubricate the bore of the solenoid valve and the spool with hydraulic fluid (OM-65) then insert the spool into the bore of the solenoid valve.

m. Install new O rings on the solenoid plunger and core.

n. Assemble the plunger, armature, push-pin and pole face into the solenoid core then insert the spool return spring into the core.

o. Slide the flange over the solenoid core, install a spacer on the end of the valve spool then position a new gasket on the end face of the valve body.

p. Position the flange and solenoid core assembly on the end of the valve body, then install and torque the retaining screws to 5.5–6.0 N.m (4.06–4.42 lbf.ft).

q. Position the solenoid over the solenoid core, align the match marks then install and tighten the retaining screws.

r. Install new O rings on the end cover spigot then place a spacer on the end of the valve spool and position a new gasket on the end face of the valve body.

s. Insert the valve spool return spring in the bore of the end cover then position the end cover on the valve body.

t. Insert the retaining screws and torque them to 7.3–7.9 N.m (5.39–5.83 lbf.ft).

u. Insert four new O rings in the recesses on the solenoid valve mounting face.

v. Position the solenoid valve on the relief valve, align the match marks then install and torque the retaining bolts to 5.6 N.m (4.13 lbf.ft).

w. Install the hose connectors and elbows to their original positions on the valve assembly and tighten them securely.

NOTE

Ensure that the check valve is installed with the arrow (indicating the direction of free flow) is pointing away from the relief valve.

63. Installation and Test. To install and test the solenoid controlled relief valve assembly:

a. Place the solenoid controlled relief valve assembly into its original position on the truck.

b. Install the two clamps over the flow control valve and through the reservoir mounting bracket.

c. Install and tighten the nuts and washers to secure the valve assembly to the mounting bracket.

d. Apply thread sealing tape to the external threads of the hose connectors.

e. Remove the plugs from each hose and its corresponding valve connector in turn and reconnect the hoses to the valve assembly, except for the check valve hose.

f. Install an 8000 kPa (1160 psi) pressure gauge to the elbow on the check valve then connect the check valve hose to the gauge (Figure 51).

g. Install a flow meter in the hydraulic circuit between the hydraulic motor and the flow control valve as shown in Figure 51.

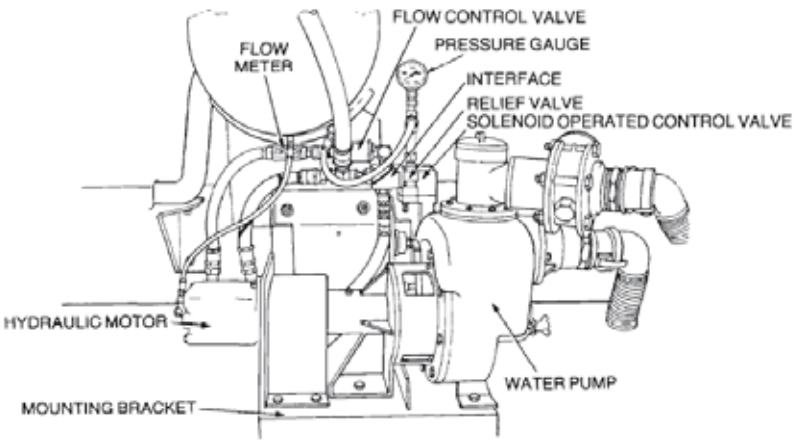

Figure 51 Installation of Pressure Gauge and Flow Meter

h. Check the level of hydraulic fluid in the oil reservoir and if necessary, top up with OM-65.

i. Remove the guard from around the water pump drive shaft coupling so that the pump rpm can be monitored by the use of a strobe tachometer or equivalent.

j. Ensure that the water pump is full and that there is an ample supply of water in the tank to prevent the pump from running dry.

k. Check that the water hoses are correctly connected and the relevant valves are open to obtain the correct back pressure at the pump.

l. Start the truck engine and engage the PTO.

m. Using the hand throttle and the tachometer, set the engine speed to 1150 rpm.

n. Switch on the pump start switch then adjust the relief valve (at the solenoid controlled relief valve assembly) to obtain a water pump rotation speed of 2800 to 3000 rpm.

o. To simulate a pump stall situation and to raise the pressure within the relief valve, slowly close the flow control valve using a spanner, to set the relief valve opening pressure. If necessary adjust the relief valve adjustment screw to raise the pressure to 7585 kPa (1100 psi).

NOTE

The pressure relief valve will open at 7584 kPa (1100psi) allowing the interface piston valve to open and fluid to vent to the oil reservoir.

p. Open the flow control valve to allow the relief and interface valves to reset then slowly close the flow control valve while watching the pressure gauge.

q. When the pressure gauge reaches 7584 kPa (1100 psi), the pressure should drop suddenly as the relief and interface valves open, if not, readjust the relief valve.

r. Once the relief valve is set, adjust the flow control valve to obtain a pump speed of 2800 to 3000 rpm.

NOTE

The fluid flow rate should be 154.6 litres/min (34 gal/min).

s. Using the hand throttle, bring the engine speed up to 2000 rpm, and check the pump rpm.

NOTE

If the pump rate is above 3150 rpm, partially close the flow control valve to reduce the pump speed to 3100 rpm.

t. Reduce the engine speed to 1150 rpm and recheck the pump rpm.

NOTE

If necessary, readjust the relief valve to obtain the correct pump rpm.

u. Switch off the pump start switch, disengage the PTO and shut down the engine.

v. Close the valves in the water system that were opened for the test procedure.

FAULT FINDING

64. Table 3 contains a fault finding chart for the hydraulic and water systems:

Table 3 Fault Finding Chart

Serial	Symptom	Probable Cause	Action
		Hydraulic System	
1	No fluid flow - No pressure	PTO to the pump splined connection is damaged	Repair or replace the pump and/or PTO as necessary
		Relief valve is incorrectly adjusted	Adjust the relief valve to the correct setting
		Check valve is jammed open	Repair or replace the check valve
		Balance hole (orifice) in the piston is plugged	Remove the pistons and clean them out. If necessary drain the system, replace the filter and refill it with clean hydraulic fluid (OM-65)
		Poppet in the relief valve is not seating	Back-off the adjusting screw several turns while running the pump to dislodge any foreign matter which may be caught on the seat. Check the condition of the seat, spring and poppet if malfunction still persists
		Solenoid is inoperative	Repair or replace
2	Erratic fluid pressure	Foreign matter in the system	Drain, flush and refill the system with clean hydraulic fluid (OM-65). Replace the filter
		Worn poppet and seat in the relief valve	Replace the poppet and seat and check the calibration
		Piston is sticking in the interface or relief valve housing	Remove and clean the piston. Remove any burrs by light lapping. Check for freedom of movement on reassembly. Replace the piston if necessary
3	Excessive noise or chatter	Distorted relief valve spring.	Replace the spring
		Worn poppet or seat in the relief valve	Replace worn parts
		Relief valve setting is too close to the system operating pressure	Calibrate the relief valve pressure
4	Fluid overheated	System pressure is too high	Calibrate the flow control and relief valve setting
		Water System	
1	No water output	Defective water pump	Repair the water pump
		Defective hydraulic system	Isolate the fault and rectify it as necessary
2	Noisy water pump	Worn outrigger bearings	Replace bearings

END

Distribution List: **VEH G 55.0 – Code 4** (Maint Level)
(Sponsor: LV SPO, Med/Hvy B Vehicles)
(Authority: TRAMM)