TRUCK, FUEL TANKER, HEAVY, MC3 – MACK

REAIRS TO THE FUEL TANK

MEDIUM AND HEAVY GRADE REPAIR

This instruction is authorised for use by command of the Chief of Army. It provides direction, mandatory controls and procedures for the operation, maintenance and support of equipment. Personnel are to carry out any action required by this instruction in accordance with EMEI General A 001.

TABLE OF CONTENTS

LIST OF FIGURES

LIST OF TABLES

INTRODUCTION

1. This EMEI details the Medium and Heavy Grade Repair procedures for the fuel tank fitted to the Truck, Tank, Fuel, Heavy, MC3 – Mack. For further information on the cab/chassis or repair and servicing information of the cab/chassis, refer to EMEI Vehicle G 70 decade.

NOTE

All work listed in this instruction can be carried out at either a Medium or Heavy Grade Repair facility.

Associated Publications

2. Reference may be necessary to the latest issue of the following documents:

a. Complete Equipment Schedule (CES) 11665 .....Truck, Fuel Tanker, Heavy, MC3 – Mack;

b. EMEI Vehicle G 70 Decade – Truck, Cargo, Heavy, MC3 – Mack;

c. EMEI Vehicle G 740 – Truck, Fuel Tanker, Heavy, MC3 – Mack – Data Summary;

d. EMEI Vehicle G 742 – Truck, Fuel Tanker, Heavy, MC3 – Mack – Technical Description;

e. EMEI Vehicle G 743 – Truck, Fuel Tanker, Heavy, MC3 – Mack – Light Grade Repair;

f. EMEI Vehicle G 747-2 – Additional Front Mudflaps;

g. EMEI Vehicle G 747-3 – Passengers Grab Handle;

h. EMEI Vehicle G 747-4 – Fitting of Class 3 Flammable Liquid Sign;

i. EMEI Vehicle G 747-6 – Replacement Cabin Map Light;

j. EMEI Vehicle G 747-7 – Hose Reel Isolation Valves;

k. EMEI Vehicle G 747-8 – Stainless Steel Low-Point Drains;

l. EMEI Vehicle G 747-9 – Non-Slip Ladder Rungs and Tread Plates;

m. EMEI Vehicle G 747-14 – Installation and Removal of Self Protection System – Vehicle Interface Kit on Valir Hardened Cab Variant;

n. EMEI Vehicle G 747-15 – Fitting of a Walkway Fall Restraint System;

o. EMEI Vehicle G 747-17 – Installation and Removal of Force Protection Counter Measures System Vehicle Installation Kit Upgrade on Valir Hardened Cab Variant; and

p. EMEI Vehicle K 016-1 – Total Restraint Access Module (TRAM) Safety System Technical Manual;

q. EMEI Workshop D 180 – Flaw Detection - Non Destructive;

r. EMEI Workshop D 701 – Repair Policy for Equipment Painted in Polyurethane Paint;

s. EMEI Workshop E 652 – Safety Precautions – Application and Removal of Polyurethane Paints and Solvents;

t. EMEI Workshop E 672 – Safety Precautions - Bulk Fuel Holding and Handling Equipment;

u. EMEI Workshop E 673 – Safety Procedures for the Repair and Maintenance of Road Tank Vehicles and Trailers for Bulk Fuel;

v. EMEI Workshop J 003 – Welding Techniques, General;

w. AS/NZS 1167.2 – Welding and Brazing – Filler Metals – Filler Metal for Welding;

x. AS/NZS 1554.6 – Structural Steel Welding – Welding Stainless Steels for Structural Purposes;

y. AS/NZS 1665 – Welding of Aluminium Structures; and

z. AS/NZS 2717.1 – Welding – Electrodes – Gas Metal Arc- Ferritic Steel Electrodes.

Item Identification Locations

3. The item identification locations are described in Table 1.

Table 1 Item Identification Locations

Serial	Item	Location
1	Chassis number	Right-hand rear frame, above intermediate axle
2	Chassis nameplate	Left-hand door inside cab
3	Engine number	Right-hand top of timing gear housing
4	Front axle number	Left rear of axle housing
5	Transmission number	Left-hand side
6	Transfer case	Right-hand rear
7	Intermediate axle number	Right-hand front of carrier housing
8	Rear axle number	Right-hand front of carrier housing
9	Injection pump identification	Side of the pump
10	Power take-off (PTO)	Right-hand side
11	Hydraulic pump	Lower side of the pump
12	Fuel tank	Left-hand forward area

List of Lubricants

4. The list of lubricants is detailed in Table 2.

Table 2 List of Lubricants

Serial	Equipment	Lubricant	Capacity (Litres)
1	Oil reservoir	OM-65	81

DETAIL

WARNING

Before working on the hydraulic system, check the temperature of the hydraulic fluid on the gauge fitted to the oil reservoir. Ensure that hydraulic fluid is sufficiently cool to avoid burns.

It is vitally important that dirt and other foreign matter are not allowed to enter the hydraulic system during repairs. Dirt or fluid other than clean hydraulic fluid in the system will cause almost immediate failure. Plug or protect openings to prevent dirt entering the system. Use plastic plugs or covers only for this purpose. Do not use cloth or paper as plugs or covers.

Overhead lifting equipment must have a minimum safe working load of 1 500 kg.

Always ensure that the fuel tanker is properly earthed, prior to carrying out repair procedures.

The TRAM safety system (if fitted) is to be used at all times when working at heights on the fuel tank body.

Eye protection must be worn when using compressed air.

PTO

5. Removal. Remove the PTO in accordance with EMEI Vehicle G 743.

6. Disassembly. Disassemble the PTO as follows:

a. Match mark the pump, the selector housing and the PTO housing to ensure their correct positioning during reassembly.

b. Remove the four nuts and washers securing the pump to the PTO and remove the pump.

c. Remove the four socket head bolts securing the selector housing to the PTO and remove the selector housing (Figure 1).

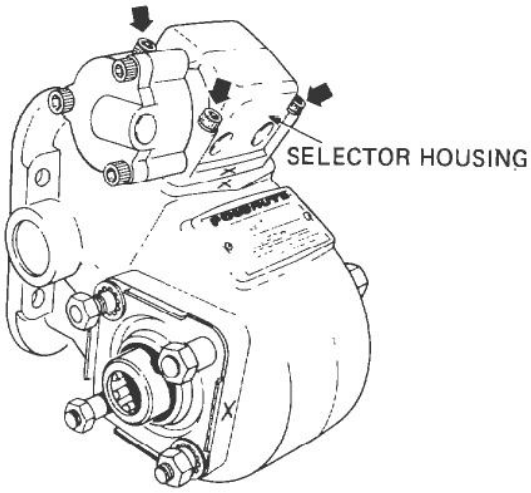

Figure 1 Socket Head Bolt Location

d. Remove a welsh plug from one end of the idler shaft.

e. Remove the circlip (furthest from the end of the idler shaft from where the welsh plug was removed) and slide it along the shaft.

f. Install the PTO housing in a press and remove the idler shaft using the press and an adapter (Figure 2).

NOTE

As the shaft is pressed out of the housing, it will cause the gear, thrust washer and circlip to slide along the shaft and will also remove the other welsh plug and a roller bearing.

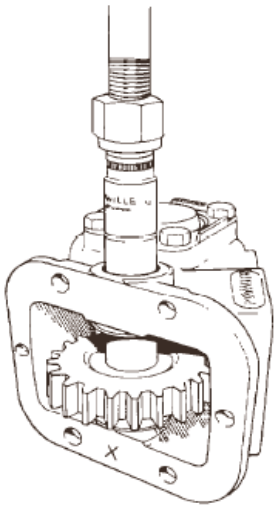

Figure 2 Removing Idler Shaft

g. Lift the second circlip from the groove and continue to press the shaft out until the circlips, thrust washers and the gear can be removed.

NOTE

When the gear is removed from the shaft a steel ball will drop out of an indent within the gear bore. This ball acts as a key, locking the gear and shaft together whilst still allowing the gear to move lengthways along the shaft.

h. To remove the remaining needle roller bearing from the housing, press the shaft back in the opposite direction.

i. Remove the four bolts securing the drive shaft bearing cover plate to the housing and remove the cover plate and gasket (Figure 3).

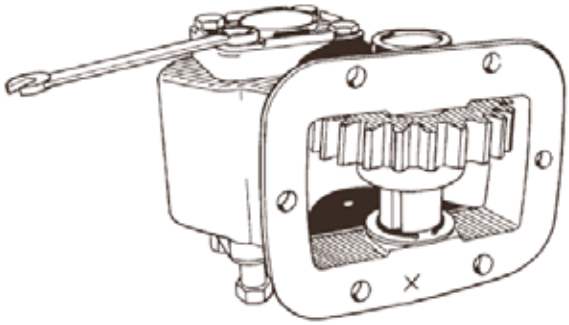

Figure 3 Removing Bearing Cover Plate

j. Remove the circlip from the groove in the drive shaft and slide it along the shaft, then remove the bearing cups by hand.

k. Remove the bearing cone from the shaft at the end opposite the output using a puller.

NOTE

Ensure that the puller is pulling against the inner race and not the cage.

l. Slide the gear and circlip off the shaft while withdrawing the shaft, complete with the other bearing, from the housing.

m. Position the drive shaft in a press then press the remaining bearing off the shaft.

7. Cleaning and Inspection. Clean and inspect the PTO as follows:

a. Clean all parts thoroughly with a cleaning agent then blow them dry with compressed air.

NOTE

Ensure that all gasket residues are removed.

b. Inspect the housing for damage or cracking and replace it if necessary.

c. Check the gears for cracked, chipped or worn teeth, also check the splines in the drive gear bore for wear and replace the gears as necessary.

d. Check the idler shaft bearing surfaces for pitting or wear, also check the channel in the idler shaft for wear and replace the idler shaft as necessary.

e. Check the internal and external splines on the drive shaft for wear and replace it as necessary.

f. Check the condition of the bearings and replace them as necessary.

8. Reassembly. Reassemble the PTO as follows:

a. Place the drive shaft in a press.

b. Position the bearing on the output end of the shaft with the taper facing away from the splines.

c. Press the bearing onto the shaft until it butts firmly against the shoulder.

d. Remove the shaft from the press.

e. Install a circlip onto the drive shaft.

f. Position the shaft partially in the housing, ensuring that the output end of the shaft is on the correct side of the housing.

g. Install the drive gear in the housing and align it with the drive shaft.

h. Feed the drive shaft into the housing and through the drive gear (Figure 4).

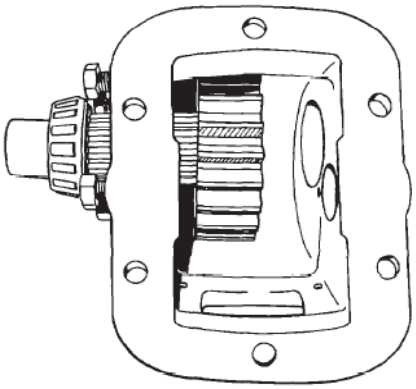

Figure 4 Installing Drive Shaft and Gear

i. Place the housing and the shaft in a press.

j. Position a bearing, with the taper facing away from the splines, on the drive shaft at the end opposite the output.

k. Press the bearing onto the shaft (Figure 5) until it butts firmly against the shoulder.

l. Remove the housing from the press.

m. Lubricate the bearings with OEP-220 then install the bearing cups into the housing.

n. Install the bearing cover and the gaskets.

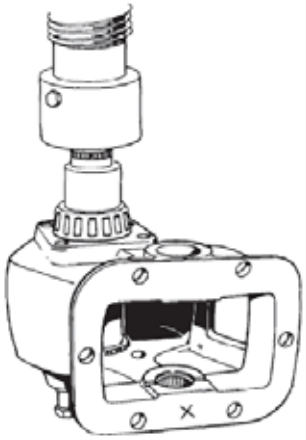

Figure 5 Installing Drive Shaft Bearing

o. Install the cover retaining bolts and torque them to 34 to 38 N.m (25 to 28 lbf. ft).

p. Position the idler shaft partially into the housing.

q. Install a thrust washer and a circlip onto the shaft.

r. Insert the steel ball into the detent in the idler gear then position the idler gear in the housing.

s. Align the channel in the idler shaft with the steel ball in the idler gear shown in Figure 6.

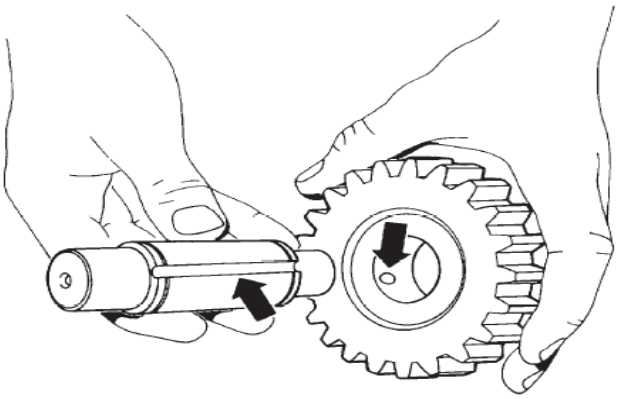

Figure 6 Channel and Steel Ball

t. Push the idler shaft further into the housing and into the idler gear (Figure 7).

u. Install the second circlip into the groove on the idler shaft.

v. Position the thrust washer on the shaft.

w. Push the idler shaft into the housing, butting the thrust washer against the housing.

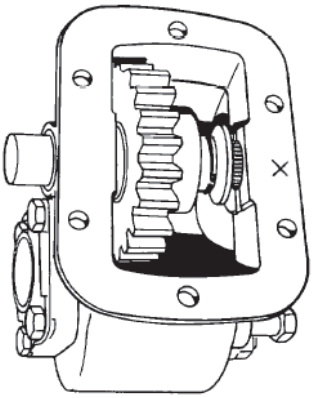

Figure 7 Installing Idler Shaft and Gear

x. Position the first thrust washer against the housing and insert the first circlip into the groove in the idler shaft.

y. Lubricate the needle roller bearings then press them into the housing on both ends of the idler shaft.

z. Install the welsh plugs.

aa. Lubricate the gears and bearings of the PTO liberally with clean OEP-220.

bb. Place a protective cover over the PTO and set it aside.

Air Operated Selector

9. Disassembly. Disassemble the air operated selector as follows:

WARNING

Before removing the selector housing air inlet cover, ensure that the circlip used to retain the selector fork to the piston is in place. The selector fork will prevent the piston flying out of the cylinder under spring pressure and potentially causing injury.

a. Remove the three socket head bolts from the air inlet cover (Figure 8) and remove the cover.

b. Discard the O ring.

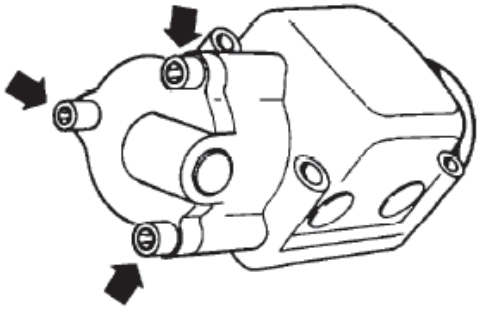

Figure 8 Air Inlet Cover Retaining Bolts

NOTE

Spring pressure will cause the piston to protrude from the housing when the cover is removed.

c. Push the piston into the cylinder bore by hand and remove the circlip retaining the selector fork to the piston from its groove (Figure 9).

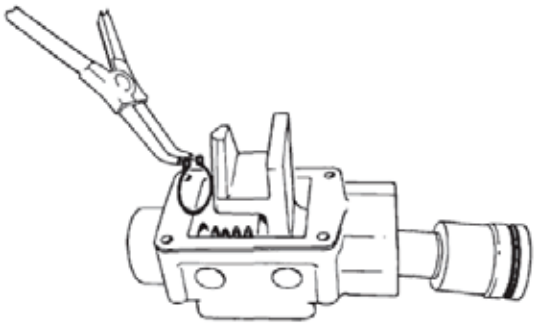

Figure 9 Removing Circlip

d. Gradually release the pressure on the piston allowing the piston to move up the bore.

e. Feed the circlip and selector fork off as the piston and return spring are removed.

f. Remove the selector fork and circlip from the housing, taking note as to which way the step in the fork is facing.

g. Discard the circlip.

h. Remove and discard the piston O ring (Figure 10).

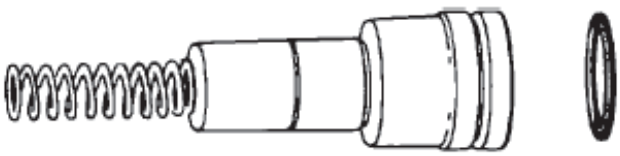

Figure 10 Piston and O ring

10. Cleaning and Inspection. Clean and inspect the air operated selector as follows:

a. Clean all parts with a suitable cleaning agent and blow them dry with compressed air.

b. Inspect the housing cylinder bore and piston for excessive wear or scoring and replace parts as necessary.

c. Inspect the selector fork for damage or wear and replace it if necessary.

d. Check the return spring for breaks, cracking or wear and replace the spring as necessary.

11. Reassembly. Reassemble the air operated selector as follows:

a. Install a new O ring onto the piston.

b. Lubricate the O ring with rubber grease.

c. Install the return spring into the bore of the piston.

d. Insert the piston partially into the cylinder bore, then position the selector fork and circlip onto the piston (Figure 11).

NOTE

Ensure that the step in the fork is facing the correct way.

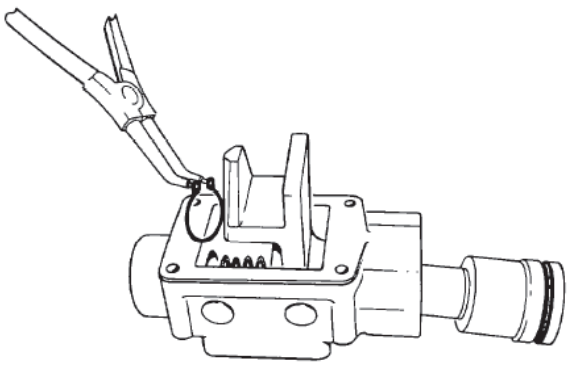

Figure 11 Installing Circlip

e. Push the piston into the bore while feeding the selector fork and circlip onto the piston.

NOTE

Ensure that the circlip is correctly seated in the groove.

f. Insert a new O ring in the groove on the air inlet cover then install the cover onto the housing.

g. Fit the retaining bolts and torque them to 9 to 13 N.m (7 to 10 lbf.ft).

h. Assemble the selector housing and a new gasket onto the PTO housing, aligning the match marks and ensuring that the selector fork is correctly located over the idler gear.

i. Install the four socket head bolts and torque them to 34 to 38 N.m (25 to 28 lbf.ft).

Adapter Housing

12. Disassembly. Disassemble the adapter housing as follows:

CAUTION

The adapter housing is quite brittle and easily damaged unless handled carefully.

a. Place the adapter housing in a soft-jawed vice.

b. Using a C-spanner, remove the bearing retaining collar.

NOTE

The collar will be firm on the thread due to the locking indentations.

c. Support the adapter housing on a press.

d. Press the shaft through the gear until there is sufficient space to remove the gear (Figure 12).

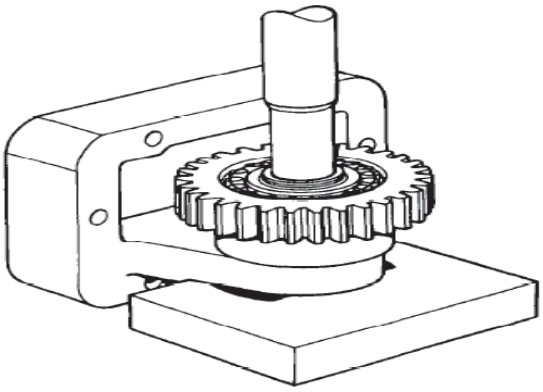

Figure 12 Pressing Shaft from Housing

e. Remove the bearing cones and spacers from the assembly.

f. Using a soft drift and hammer, remove the bearing cups from the gear.

g. Remove the snap ring from the gear if damage is evident (Figure 13).

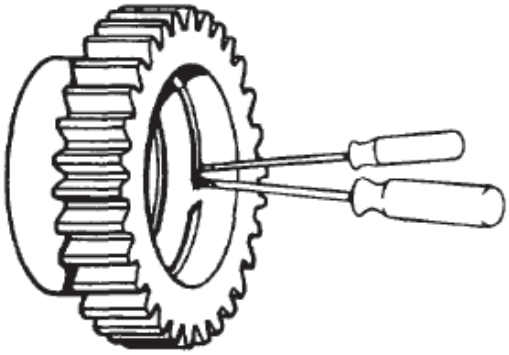

Figure 13 Removing Snap Ring

13. Cleaning and Inspection. Clean and inspect the adapter housing as follows:

a. Clean all parts thoroughly with a suitable cleaning agent and ensure that all gasket residues are removed.

b. Inspect the gear for worn or damaged teeth and replace it as necessary.

c. Check the bearings for wear or damage and replace them as necessary.

d. Check the shaft for wear or damage and replace it as necessary.

e. Check the thickness of the bearing-to-housing spacer, 2.99 mm (0.114 in.); the bearing cone spacer, 3.55 mm (0.140 in.) and the snap ring, 3.96 mm (0.156 in.) and replace them if worn or damaged.

NOTE

The snap ring provides the correct bearing cup spacing.

14. Reassembly. Reassemble the adapter housing as follows:

a. Install the snap ring (if removed).

b. Press the bearing cups into the gear.

NOTE

Ensure that the bearing cups butt firmly against the snap ring.

c. Position the bearing-to-housing spacer and the inner bearing on the shaft (Figure 14).

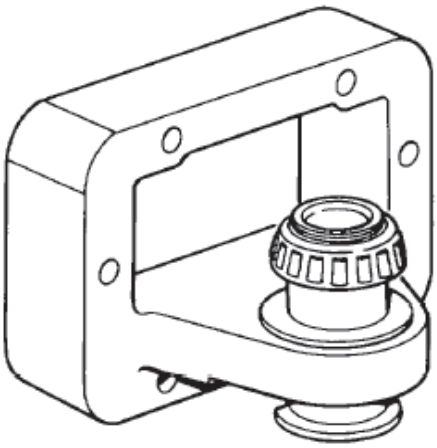

Figure 14 Positioning Bearing and Spacer

d. Place the adapter housing and shaft in the press.

e. Position the gear, the spacer and the outer bearing cone on the shaft and press the bearings and gear onto it.

f. Ensure that the flat on the shaft flange is correctly aligned and that the bearings are seated firmly against the spacers (Figure 15).

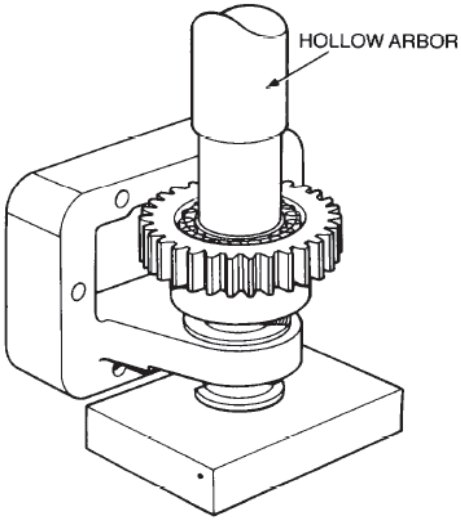

Figure 15 Installing Shaft, Gear and Bearings

g. Install the new retaining collar and tighten it securely.

h. Stake the retaining collar to the shaft, using a staking chisel and hammer.

i. Lubricate the bearings with OEP-220.

j. Check that the gear revolves freely and without undue noise.

15. Determining Backlash. Determine backlash in accordance with EMEI Vehicle G 743.

16. Installation. Install the PTO in accordance with EMEI Vehicle G 743.

Tank

WARNING

The TRAM safety system (if fitted) is to be used at all times when working on top of the fuel tank body.

Ensure that each compartment (including the delivery pipes and hoses) is completely drained of fuel and the tank has been purged of fuel vapours in accordance with EMEI Workshop E 673.

17. Removal. Remove the tank as follows:

a. Disconnect the earth cable from the battery negative terminal

b. Disconnect the cable from the positive terminal.

c. Close the tank outlet valves and the manifold inlet/outlet valve.

d. Disconnect the flexible pipe from the manifold.

e. Remove the screws securing the back cover to the control box and remove the back cover.

f. Tag and then disconnect the spring brake release signal line, the air supply line and the instrument panel lamp (PUMP ENGAGED) signal line.

g. Loosen and remove any clamps securing the low point drain tubes.

h. Loosen and remove the low point drain tubes at the ball valves and at the sample valve mounting plate.

i. Plug the open ends of the tube and valves with plastic plugs.

j. Remove the low point drain tubes.

k. Disconnect the tank walkway work lamp electrical wiring and conduit at the junction box, located at the rear of the left-hand chassis rail.

l. Remove any clamps securing the conduit to the chassis.

m. Remove the extension hoses from the bottom of the rear ladder rails.

n. Position the overhead lifting equipment, with a minimum safe working load of 1 500 kg (3 300 lb.) above the tank.

o. Attach slings to the lifting equipment and to the lifting lugs in the tank walkway.

p. Disconnect the earth wire from the tank front support saddle on the left-hand side of the truck (Figure 16).

q. Remove the nuts, bolts, washers and springs from the four front support saddles on the tank and discard the nuts.

r. Take up the slack in the lifting slings then remove the bolt and washer from the keeper plate on the rear mounting centre pivot.

s. Position a lever bar between the support saddle and the mounting bracket then rock the tank up and down with the lever bar to assist in removing the centre pivot pin.

t. Lift the tank complete with the outlet pipes, manifold, ladder, manhole covers and the control box clear of the truck and place it on a cradle which will allow the removal of the outlet pipes.

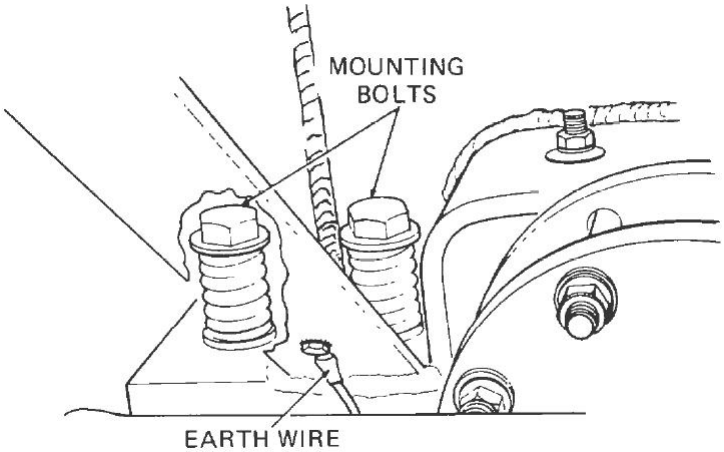

Figure 16 Front Left Support

18. Disassembly. Disassemble the tank as follows:

a. Remove the sampling valve lines and ball valves from compartments 1 and 2 in accordance with EMEI Vehicle G 743.

b. Place a support beneath the outlet pipes then remove the bolts, nuts and washers from the outlet pipe flanges at the foot valves and remove the pipe clamps securing the outlet pipes to the tank support brace.

c. Cut the zip clamps securing the foot valve air lines to the outlet pipes then remove the outlet pipes and manifold from the tank.

d. Disconnect the air lines from the foot valves then remove the bolts and washers securing the foot valves to the tank and remove the foot valves.

e. Remove the access covers (Para 111).

f. Remove the screws from the front of the walkway work lamp (Figure 17) and remove the lens and reflector assembly.

g. Unplug the wiring then pull the wiring and connectors through the rubber boot.

h. Slacken or remove the clamps securing the wiring conduit to the back of the tank and remove the conduit (complete with the wiring) from the tank.

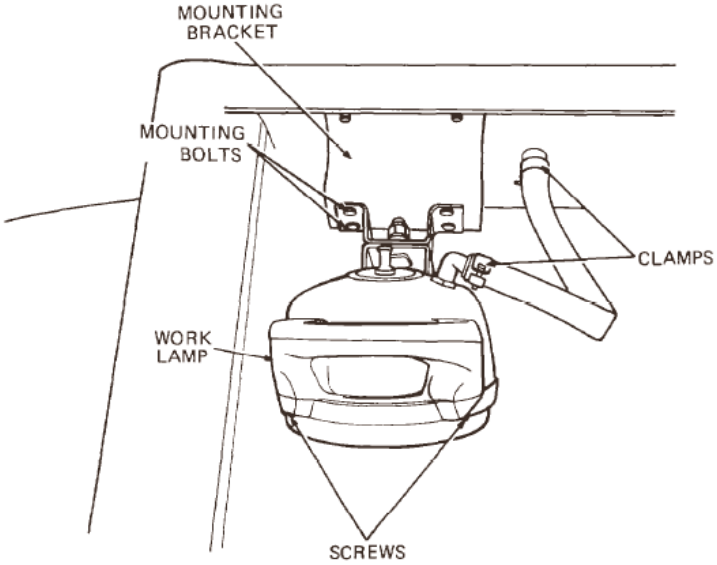

Figure 17 Walkway Work Lamp

i. Slacken the clamp securing the conduit to the inside of the walkway (Figure 17) and disconnect the conduit.

j. Position the lens and reflector assembly on the work lamp then install and tighten the screws.

k. Remove the four bolts, nuts and washers securing the work lamp to the mounting bracket and remove the work lamp.

l. Remove the vapour transfer vents in accordance with EMEI Vehicle G 743.

m. Remove the level sensors in accordance with EMEI Vehicle G 743.

n. Remove the pressure and vacuum vent in accordance with EMEI Vehicle G 743.

o. Unclip the conduit from the clips in the tank walkway and remove the conduit, complete with air lines, from the tank.

p. Remove the bolts, nuts and washers securing the air line conduit to the control box and to the top front of the tank and remove the conduit.

q. Remove the bolts, nuts and washers securing the control box to the tank and remove the control box.

r. Slacken the clamps securing the drain hoses to the walkway drain outlets and disconnect the hoses from the outlets.

s. Remove the bolts, nuts and washers securing the ladder to the tank and remove the ladder.

t. Remove the bolts, nuts and washers securing the hose stowage tubes to the tank and remove the tubes.

19. Cleaning and Inspection. Clean and inspect the tank as follows:

WARNING

Personnel involved in tank entry are to be trained in Confined Space Entry Procedures. A Confined Space Entry Permit must be issued prior to entering the fuel tank in order to carry out inspections, cleaning or maintenance work.

a. Clean the tank, both inside and out, with cleaning agent. Ensure that any sedimentary build-up inside the tank is removed then flush out the tank.

b. Check for corrosion or any sign of damage, such as stress fractures around the outlet flanges and the tank support saddles and repair or replace the tank as necessary.

c. Check the condition of the components removed at disassembly and repair or replace any component that is worn or damaged.

d. Check the condition of the tank rear centre pivot bearing. If necessary, remove the circlips retaining the bearing and drive the bearing from the saddle support.

20. Repair. Repair the tank as follows:

WARNING

Prior to carrying out work on the tank, EMEI Workshop E 672 and E 673 are to be read and fully complied with.

a. The tank and associated plumbing are repairable using the correct material and welding consumables provided that all work is carried out in accordance with EMEI Workshop E 672 and E 673.

b. Metal Inert Gas (MIG) welding procedures shall be used when repairing the tank.

c. Tungsten Inert Gas (TIG) welding process shall be used to weld the plumbing or piping.

d. The following welding materials and repair methods are to be used:

(1) To weld tank body sheets and pipe flanges to the tank use Aluminium Series 5083.

(2) To weld tank ends, bulkheads and baffles use Aluminium Series 5083.

(3) To weld tank outlet pipes and manifold use Aluminium Series 6063.

(4) To weld hose reel piping (pump to hose reels) use Stainless Steel Series 304.

(5) **Safety Precautions.** All safety precautions relevant to Polyurethane paint are to be adhered to in accordance with EMEI Workshop E 652.

(6) **Authorized Tradespeople.** Only Metalsmith ECN 235-2 or Defence civilian employees with welding Certificate 8 (GMAW) and Certificate 7 (GTAW) are authorized to conduct welding repairs.

(7) **Consumables Aluminium Series 5083 (MIG).** The welding consumables (filler wire) for the tank body sheets, pipe flanges welded to the tank, tank ends, bulkheads and baffles required is AS 2717.1 Autocraft E 4043 – 1.2 wire.

(8) **Consumables Aluminium Series 6063 (TIG).** The welding consumables for tank outlet pipes and Manifold require AS 1167.2 Comweld R 4043 – 1.6 wire.

(9) **Consumables Stainless Steel Series 304 (TIG).** The welding consumables for hose reel piping require AS 1167.2 Comweld 316L – 1.6 wire.

(10) **Pre-weld Cleaning.** Remove all surface protective coatings from the repair area for a distance of 25 mm in all directions in accordance with EMEI Workshop D 701. PPE for this procedure is detailed in EMEI Workshop E 652.

(11) **Workshop environmental conditions.** The weld repair area should be maintained at a temperature of not less than 10º C and the temperature of the actual metal should be not less than 20º C.

(12) **Welding Procedure Aluminium.** Welding procedures are to be in accordance with the manufacturer's instructions and all workmanship/welding is to be in accordance with the guide lines stated in AS 1665.

(13) **Welding Procedure Stainless Steel.** Welding procedures are to be in accordance with the manufacturer's instructions and all workmanship/welding is to be in accordance with the guide lines stated in AS 1554.6.

(14) **Inspection of Welds.** A visual inspection of the repair is required during the preparation and setting up of the joint to ensure the correct alignment. After welding, a visual inspection is to be conducted for any weld defects. If a Dye Penetrant Inspection is required, the procedure is to be in accordance with EMEI Workshop D 180.

(15) **Documentation.** A weld data sheet for this repair is to be compiled and entered in Part 4 of TGM 120. A copy of a 'Weld Data Sheet' can be located in EMEI Workshop J 003.

21. **Assembly.** Assemble the tank as follows:

a. Position the ladder on the tank, install the bolts, nuts and washers and torque them to 38 to 42 N.m (28 to 31 lbf.ft).

b. Reconnect the walkway drain hoses to the drain outlets and tighten the clamps.

c. Position the control box on the tank then install the bolts, nuts and washers securing the box to the tank and tighten them securely.

d. Position the front conduit onto the control box and the top front of the tank.

e. Install and tighten the retaining bolts, nuts and washers.

f. Position the air lines and conduit in the clips located in the tank walkway and feed the air lines through the front conduit into the control box.

g. Push the air lines into their correct locations in the poppet valves in the control box.

h. Install the pressure and vacuum vent in accordance with EMEI Vehicle G 743.

i. Install the level sensors in accordance with EMEI Vehicle G 743.

j. Install the vapour transfer vents in accordance with EMEI Vehicle G 743.

k. Install the access cover assemblies (Para 115).

NOTE

Ensure that the dipsticks are located in their correct compartments.

l. Position the walkway work lamp on the mounting bracket (Figure 17), then install and tighten the retaining bolts, nuts and washers.

m. Install the work lamp wiring and conduit, then install and tighten the clamps to secure the conduit to the back of the tank.

n. Remove the screws from the front of the work lamp and remove the lens and reflector assembly, then feed the ends of the work lamp wiring through the small piece of conduit and into the back of the work lamp.

o. Push the ends of the wires through the rubber boot then connect them to the socket.

p. Position the lens and reflector assembly on the work lamp, then install the screws to secure the lens and reflector assembly to the work lamp.

q. Reconnect the work lamp conduit and clamp it in position.

r. Position new gaskets on the top flange of the foot valve assemblies, then in turn, install each foot valve into the outlet flanges of the tank.

s. Install the bolts and washers securing the foot valves to the tank and torque them to 38 to 42 N.m (28 to 42 lbf.ft).

t. Position the outlet pipe and manifold assembly on a support beneath the tank.

u. Install the pipe clamps over the outlet pipes and through the tank support brace.

v. Install the nuts and washers onto the clamps, but do not tighten them.

w. Position new gaskets between the foot valve and outlet pipe flanges, then install the bolts, nuts and washer and torque them to 38 to 42 N.m (28 to 31 lbf.ft).

x. Tighten the nuts on the pipe clamps at the manifold end of the outlet pipes.

y. Reconnect the air lines from the control box to the foot valves and clamp the air lines to the outlet pipes with zip clamps.

z. Install the sampling line ball valves into the base of each tank compartment and tighten the connectors securely.

aa. Connect the sampling lines to the valves in compartments 1 and 2, but do not connect the line to the valve in compartment 3 until the tank has been installed.

bb. Secure the sampling valve and mounting bracket assembly to the outlet pipes.

cc. If removed, install a new rear centre pivot bearing in the tank saddle support and secure it in place with new circlips.

dd. Position the hose stowage tubes on the tank, then install the retaining bolts, nuts and washers and tighten them securely.

22. Installation. Install the tank as follows:

a. Position overhead lifting equipment, with a minimum safe working load of 1 500 kg (3 300 lb), above the tank then attach slings to the lifting equipment and to the lifting lugs in the tank walkway.

b. Lift the tank and position it above the truck.

c. Place new insulators on the front mounting pads, then carefully lower the tank onto the truck.

d. Install the rear pivot pin.

NOTE

If necessary use a lever positioned between the tanks saddle support and the mounting bracket to rock the tank up and down to facilitate the installation of the pivot pin.

e. Install the pivot pin keeper plate bolt and washer and torque it to 38 to 42 N.m (28 to 31 lbf.ft).

f. Install the bolts, new springs and washers and new locknuts in the four front support saddles.

g. Tighten the locknuts until the compressed spring length is 45 mm (1.75 in.) as shown in Figure 18.

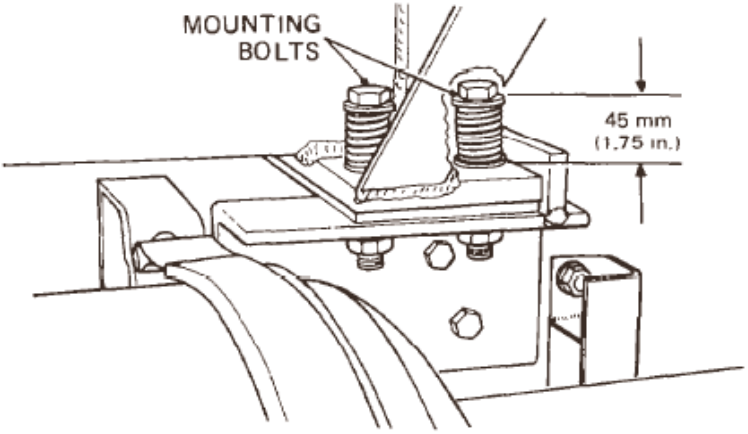

Figure 18 Front Right Support

h. Reconnect the earth lead to the saddle support on the left-hand side of the tank (Figure 16).

i. Manoeuvre the low point drain tubes into their correct positions, under the tank.

j. Remove the plastic plugs and reconnect the drain tubes to the ball valves and the sample valve mounting plate.

k. Refit the clamps that secure the low point drain tubes.

l. Position the mounting bracket on the chassis, then install and torque the retaining bolts, nuts and washers to 51 to 56 N.m (38 to 42 lbf.ft).

m. Connect the sampling line to the valve in compartment 3.

n. Connect the walkway work lamp electrical wiring and conduit to the junction box at the rear of the left-hand chassis rail.

o. Install and tighten the clamps securing the conduit to the back of the tank.

p. Connect the spring brake release signal line, the air supply line and the instrument panel lamp (PUMP ENGAGED) signal line into their correct positions in the control box.

q. Push the air lines into the connectors.

r. Position the rear cover on the control box, then install and tighten the retaining screws.

s. Connect the extension hoses to the bottom of the ladder and tighten the clamps to secure the hoses in position.

t. Connect the flexible hose to the manifold and to the fuel pump and lock it in position.

u. Connect the battery cables to the positive and negative terminals, respectively.

v. Partially fill the three compartments of the tank, checking the operation of the pump and the controls while filling and rectify any faults as necessary.

w. Check the foot valves, the pipe and hose connections for leaks and rectify any leaks as necessary.

x. Continue filling the compartments in the tank to ensure that the level sensors are correctly adjusted.

NOTE

If necessary, calibrate the sensors in accordance with Para 100.

y. Once the tank and the equipment have been checked, pump the fuel back into the bulk storage tank.

Fuel Pump

23. Removal. Remove the fuel pump as follows:

a. Clean the fuel pump and the inlet/outlet pipes then blow them dry with compressed air.

b. Place a receptacle beneath the pump and inlet /outlet pipes to catch any fuel spillage.

c. Ensure that the tank outlet valves are in the closed position then disconnect the flexible pipe from the outlet manifold and the fuel pump inlet branch.

d. Remove the four bolts, nuts and washers from the flange fitting at the non-return valve and remove the non-return valve (Figure 19).

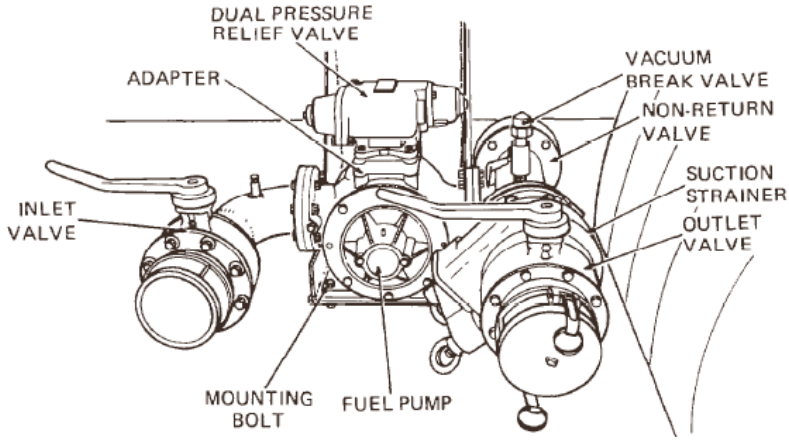

Figure 19 Fuel Pump and Associated Valves

e. Remove the four bolts, nuts and washers securing the fuel pump to the manifold bracket.

CAUTION

Take note of the shims and their locations. To prevent premature wear of the pump drive shaft coupling, the shims must be placed in their original positions at reassembly.

f. Remove the shims located beneath the pump.

CAUTION

Due to the physical position of the fuel pump, overhead lifting equipment cannot be utilized during the removal procedure. Additional personnel will be required to remove the pump from the mounting bracket.

g. Remove the fuel pump assembly from the truck.

24. Disassembly. Disassemble the fuel pump as follows:

a. Match mark the dual pressure relief valve, the adapter and the pipe flange fittings to the pump.

b. Remove the bolts, nuts and washers securing the inlet/outlet pipes to the pump and remove the pipes.

c. Remove the nuts and washers securing the dual pressure relief valve to the adapter and remove the relief valve.

d. Remove the socket head bolts and washers securing the adapter to the pump body and remove the adapter.

e. Remove the grub screws securing the Fenner coupling to the drive shaft and slide the coupling off, then remove the key from the shaft.

f. Remove the dust covers from the bearing housings at both ends of the shaft and discard the O rings (Figure 20).

g. Remove the bolts and washers securing the bearing housings to the pump body and remove the housings.

h. Remove the mechanical seal components from the bearing housings and discard the seal components.

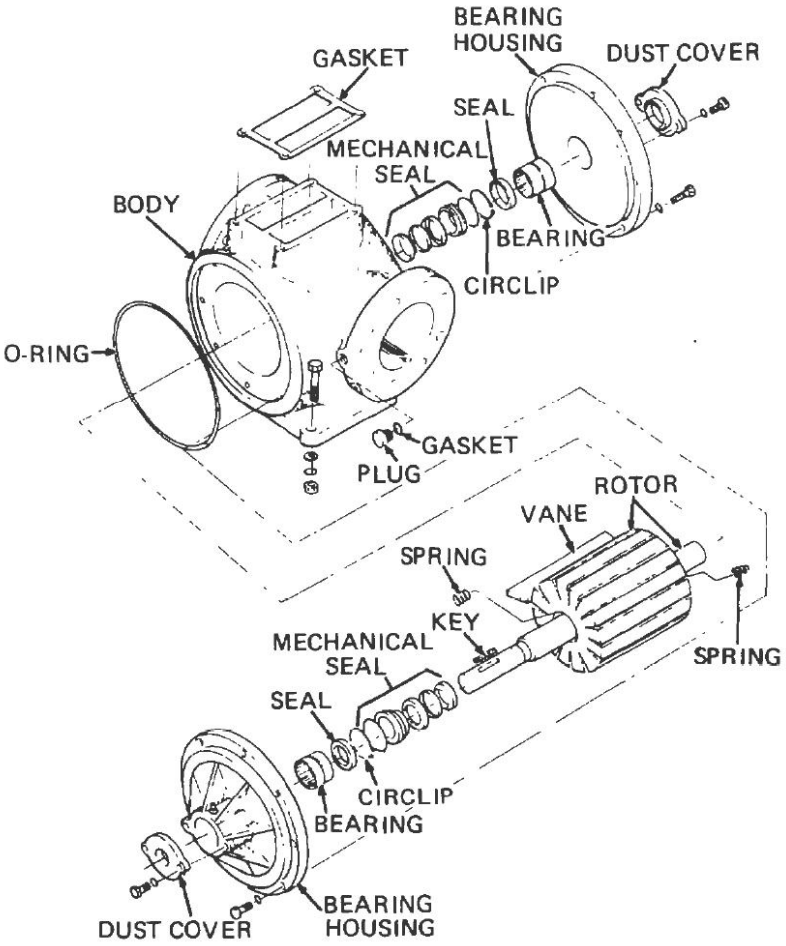

Figure 20 Fuel Pump – Exploded View

i. Remove the internal circlips from the bearing housings.

j. In turn, position each bearing housing in a press and press the bearing and oil seal from the housing using an arbor.

k. Note the position of the input shaft of the rotor in relation to the pump body.

l. Remove the rotor, complete with vanes and mechanical seal springs from the pump body.

m. Discard the springs.

n. Remove the filter (strainer) element from the outlet branch pipe by turning the two securing rings 90°.

o. Lift the cover and rings from the housing and remove the element.

25. Cleaning and Inspection. Clean and inspect the fuel pump as follows:

a. Clean all components and blow them dry with compressed air.

NOTE

Ensure that all gasket residues are removed.

b. Inspect the bore of the pump body for scoring, excessive wear or damage and replace the pump body if necessary.

c. Check the pump body and the bearing housings for damage or cracking and replace the pump body or bearing housings as necessary.

d. Inspect the rotor and shaft for scoring, wear or damage, especially the areas on the shaft where the bearings run and replace parts as necessary.

e. Check for worn or damaged vanes and replace them as necessary.

f. Inspect the bearings for pitted or damaged needle rollers and replace the bearings as necessary.

g. Check the condition of the filter (strainer) element and replace it as necessary.

26. Assembly. Assemble the fuel pump as follows:

a. Insert the vanes in the rotor in the same pattern as shown (Figure 21).

b. Install the rotor into the pump body, orientated as previously noted (Para 24.k).

c. Position the bearing housings in the press then press the bearings and the seals into the housings.

d. Insert the internal circlips.

e. Assemble the mechanical seals and install them into the bearing housings.

f. Insert the mechanical seal springs into the drillings in both ends of the rotor.

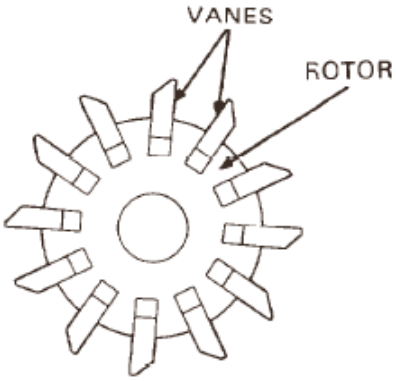

Figure 21 Rotor and Vane Configuration

g. Position new O rings in the grooves in the pump body bearing housing mounting faces.

h. Position the bearing housing, with the grease fitting uppermost, over the rotor shaft and against the pump body.

i. Install and torque the retaining bolts to 38 to 42 N.m (28 to 31 lbf.ft).

j. Install the dust covers on the bearing housings and tighten the retaining bolts.

k. Insert the key into the shaft, then install the Fenner coupling and secure it in place by tightening the grub screws.

l. Position a new gasket on the top face of the pump body.

m. Install the adapter (aligning the match marks) and the retaining bolts and washers and torque them to 38 to 42 N.m (28 to 31 lbf.ft).

n. Position a new gasket on the adapter then place the pressure relief valve over the gasket while aligning the match marks.

o. Install the nuts and washers and torque them to 38 to 42 N.m (28 to 31 lbf.ft).

p. Using new gaskets, install the inlet /outlet pipes onto the pump flanges.

NOTE

Ensure that the match marks are correctly aligned.

q. Install the bolts, nuts and washers and torque them to 38 to 42 N.m (28 to 31 lbf.ft).

27. Installation. Install the fuel pump as follows:

CAUTION

Due to the physical position of the fuel pump, overhead lifting equipment cannot be utilized during the installation procedure. Additional personnel will be required to replace the pump onto the mounting bracket.

a. Position the fuel pump assembly on the mounting bracket. Ensure that the rubber insert is in position in the Fenner coupling.

b. Slide the fuel pump assembly towards the coupling, while aligning the lugs in the coupling with the slots in the rubber insert. Ensure that the Fenner coupling is correctly engaged.

c. Align the pump mounting bolt holes then install the shims in their correct locations, as noted at their removal (Ref CAUTION prior to Para 23.f)

d. Install the retaining bolts, nuts and washers, but do not torque them as yet.

e. Position the non-return valve together with new gaskets in the hose reel delivery pipe. Ensure that the valve is orientated so as to prevent the flow of fuel back to the pump.

f. Install the bolts, nuts and washers through the flanges and torque them to 185 to 200 N.m (136 to 148 lbf.ft).

g. Check that the Fenner coupling is correctly aligned by placing a straight edge axially on the coupling, on the top, the bottom and the two sides to ensure that the two halves of the coupling are square with each other, to within 0.45 mm (0.018 in.). If necessary, add or remove shims under the fuel pump assembly to achieve the correct alignment of the coupling.

h. Torque the pump mounting bolts and nuts to 94 to 103 N.m (69 to 76 lbf.ft).

i. Rotate the Fenner coupling and check that the play (lash) within the coupling is equal when checked at several different degrees of location.

j. Install the filter (strainer) element into the filter housing.

k. Insert a new gasket into the filter cover, then position the cover on the housing and secure it in place by turning the securing rings 90°.

l. Reconnect and secure the flexible hose to the outlet manifold and to the fuel pump inlet branch.

m. Check the operation of the fuel pump to ensure that it will pump fuel into or out of the tank.

Dual Pressure Relief Valve

28. Removal. Remove the dual pressure relief valve in accordance with EMEI Vehicle G 743.

29. Disassembly. Disassemble the dual pressure relief valve as follows:

WARNING

Hold the covers securely while removing the retaining bolts to prevent the covers from flying off and causing personal injury.

CAUTION

Prior to removing the end covers, relieve the spring pressure within the valve body by turning the adjusting spindles (located in the end covers) clockwise until the spring collar bottoms out. The covers will still be under a small amount of spring pressure.

a. Remove the bolts, nuts and washers retaining the end covers to the valve housing and remove the covers (Figure 22) and discard the O rings.

b. Remove the springs, then remove the valve and guide assemblies.

c. Remove the spring seats (rings) from the valve assemblies.

d. Remove the spindle and spring collar assemblies from the covers, and discard the O rings.

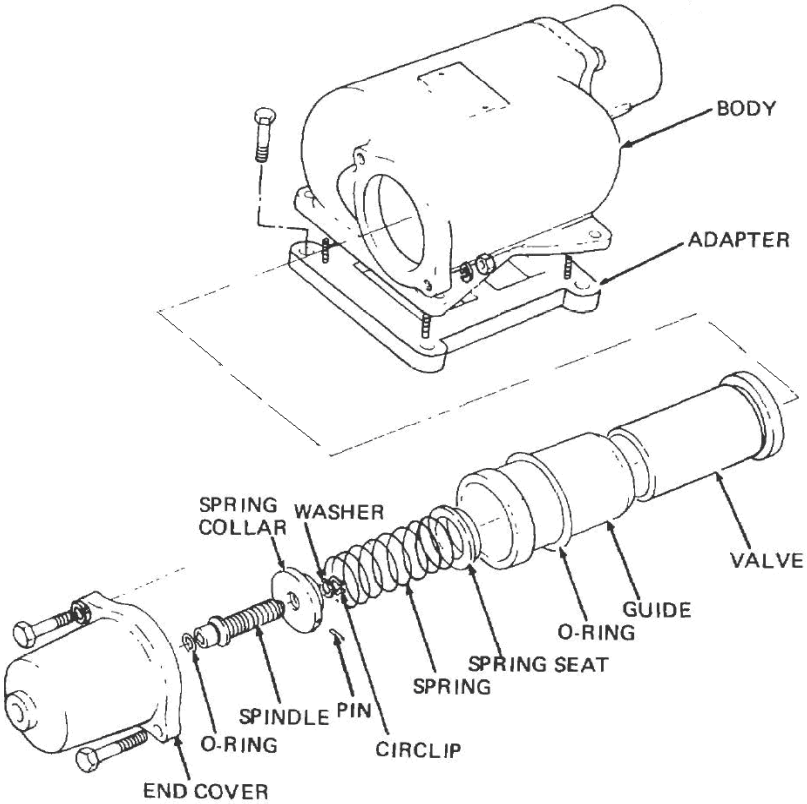

Figure 22 Dual Pressure Relief Valve – Exploded View

30. Cleaning and Inspection. Clean and inspect the dual pressure relief valve as follows:

a. Clean all components with a cleaning agent then blow them dry with compressed air.

b. Remove all gasket residues from the base of the pressure relief valve and from the adapter on the fuel pump.

c. Inspect the guides for scoring, wear or damage and replace them as necessary.

d. Inspect the springs for wear, distortion or damage and replace them as necessary.

e. Check the condition of the adjusting spindles, spring collars and locating pins and replace worn or damaged parts as necessary.

f. Check the valve body for cracks or damage and check the valve seats for wear or damage and replace as necessary.

31. Assembly. Assemble the dual pressure relief valve as follows:

a. Install new O rings on the adjusting spindles then insert the spindles complete with the spring collars into the covers.

b. Insert the spring seats (rings) into the valve assemblies.

c. Insert the valve assemblies into the guides then install the guides into the valve body.

d. Position new O rings over the guides, then install the springs and the end covers.

e. Install the bolts and nuts and torque them to 19 to 21 N.m (14 to 15.5 lbf.ft).

32. Installation. Install the dual pressure relief valve in accordance with EMEI Vehicle G 743.

33. Calibration. Calibrate the dual pressure relief valve as follows:

a. With the assistance of a qualified operator and without using the onboard pump, partially fill a tank compartment with enough product to flood the header pipe manifold.

b. Shut the vacuum break ball valve in the fuel pump outlet pipe then remove the vacuum break valve from the ball valve and attach a 500 kPa (75 psi) pressure gauge (Figure 23) into the ball valve.

c. Make sure that the inlet branch butterfly valve is shut then remove the blanking plug from the fuel pump inlet pipe and insert a 500 kPa (75 psi) pressure gauge (Figure 23).

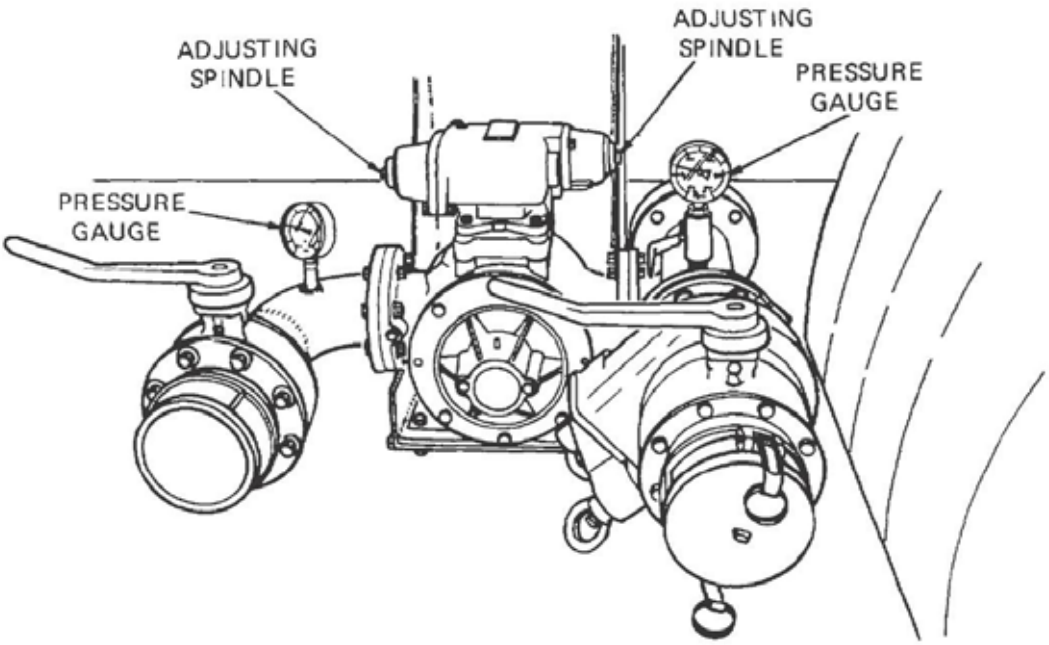

Figure 23 Dual Pressure Relief Valve Calibration

d. Connect the flexible hose from the compartment with fuel to the inlet coupling.

e. Start the engine and engage the PTO then set the engine speed to 900 rpm using the hand throttle and the tachometer.

f. Open the tank outlet valve of the compartment with fuel.

g. Open the inlet branch butterfly valve.

h. Close all discharge valves then open the E, U and compartment valve (with fuel) then set the fuel pump control lever to the DISCHARGE position.

i. Open the ball valve on the outlet pipe and check the reading on the gauge.

j. Adjust the dual pressure relief valve, at the spindle furthest from the outlet pipe, until a reading of 300 kPa (43 psi) is obtained.

k. Set the fuel pump control lever to the OFF position (centred), shut the inlet branch butterfly valve, then set the fuel pump control lever to LOAD and check the reading on the pressure gauge fitted on the pump inlet pipe.

l. Adjust the dual pressure relief valve, at the spindle furthest from the inlet pipe, until a reading of 300 kPa (43 psi) is obtained.

m. Shut down the pump controls, disengage the PTO and shut down the engine.

n. Place a receptacle beneath the pressure gauges to catch any fuel spillage.

o. Remove the pressure gauges and install the blanking plug and the vacuum break valve into their respective positions.

Tank Foot Valve

34. Removal. Remove the tank foot valve in accordance with EMEI Vehicle G 743.

35. Disassemble. Disassemble the tank foot valve as follows:

a. Remove the bolt, washer and cover securing the strainer to the top of the valve (Figure 24), and remove the strainer.

b. Remove the circlip from the base of the valve assembly and remove the cylinder cover, air piston, air cylinder, piston rod and push rod assembly from the valve body.

c. Straighten one end of the wire ring securing the dashpot to the valve body, then pull the wire ring from the slot in the dashpot to enable the dashpot, spring, valve piston and seals to be removed from the top of the valve body.

36. Cleaning and Inspection. Clean and inspect the tank foot valve as follows:

a. Clean all components with a cleaning agent then blow them dry with compressed air.

NOTE

Ensure that all gasket residues are removed.

b. Inspect all components for wear or damage and replace parts as necessary.

37. Assembly. Assemble the tank foot valve as follows:

a. Install a new seal and support ring onto the valve body then insert the valve piston into the valve body.

b. Apply silicone grease (XG-315) to new dashpot seals then install the new seals into the dashpot with the seals orientated as shown in (Figure 24).

c. Install the spring in the valve piston, then position the dashpot over the spring and piston and push it down onto the valve body.

d. Align the groove in the valve body with the internal groove in the dashpot (the grooves can be seen through the slot in the side of the dashpot).

e. When the grooves are aligned, feed the new wire ring in until it protrudes from the slot.

f. Bend both ends of the wire back to prevent the wire from working out of the groove.

g. Install a new O ring onto the piston rod.

h. Smear both the O ring and piston rod with silicone grease (XG-315) then insert the piston rod in the top of the air cylinder.

i. Smear a new wiper ring with XG-315 and install it into the top of the air cylinder.

j. Smear a new main seal and a new shaft seal with XG-315 then assemble them on the air piston and piston shaft respectively.

NOTE

Ensure that the seals are correctly orientated (Figure 24).

k. Install a new O ring into the base of the valve body, then install the air cylinder and air piston assembly.

l. Position a new O ring on the cylinder cover, then install the cylinder cover into the base of the valve body and retain it in position with the circlip.

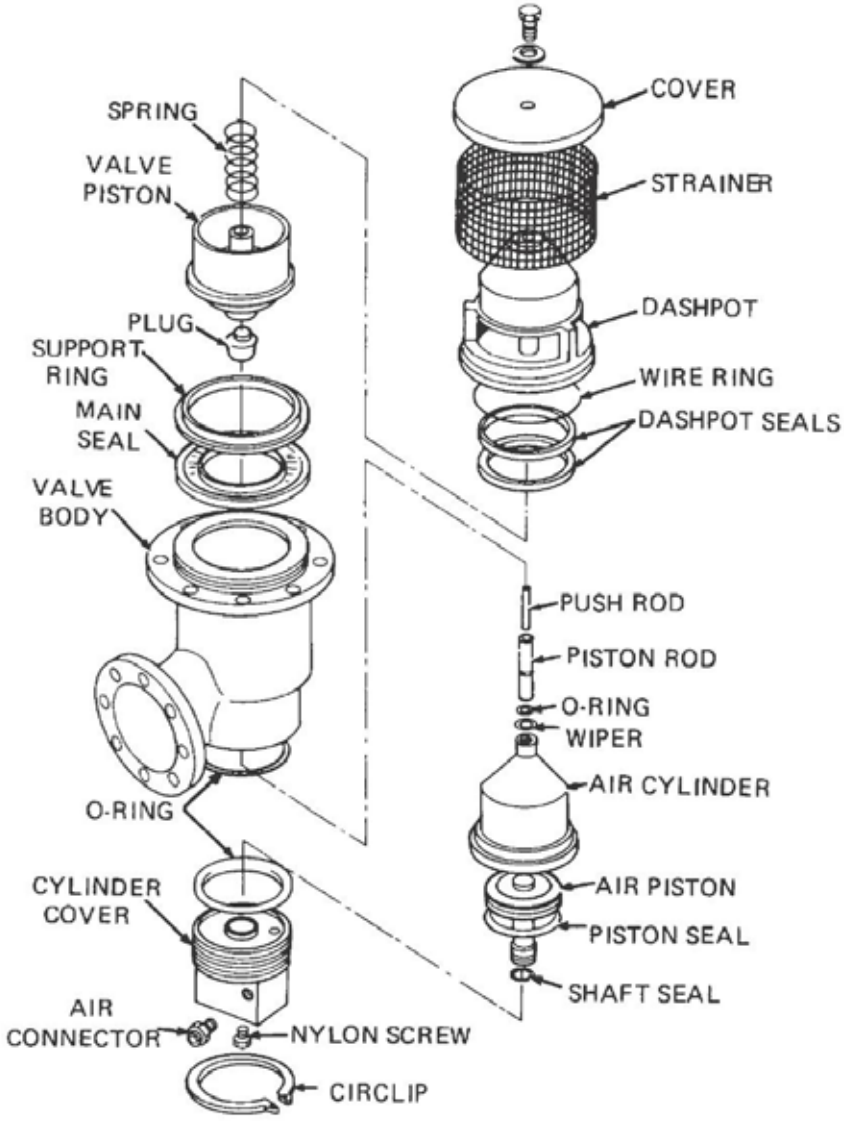

Figure 24 Tank Foot Valve – Exploded View

38. Installation. Install the tank foot valve in accordance with EMEI Vehicle G 743.

Tank Outlet Valves

39. Removal. Remove the tank outlet valves in accordance with EMEI Vehicle G 743.

40. Disassembly. Disassemble the tank outlet valves as follows:

a. Note the position of the handle in relation to the offset bosses in the disc, then slacken the locking screw and remove the handle (Figure 25).

b. Lift the rubber boot from the top of the valve body and remove the two thrust washers.

c. Drive the roll pin out from the bottom of the valve body, using a drift and hammer.

d. Remove the bottom shaft and O ring and discard the O ring.

e. Remove the screw and washer from the top of the valve body.

f. Remove the top shaft and O ring and discard the O ring.

g. Remove the disc from the valve body.

h. Remove the O rings from the valve body and disc and discard the O rings.

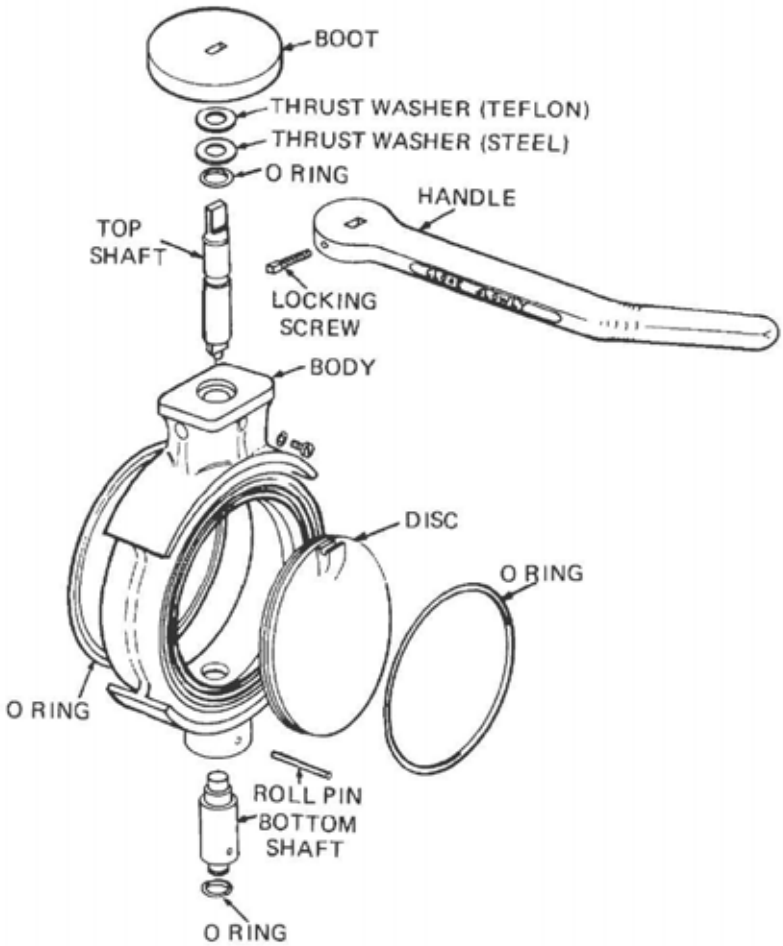

Figure 25 Tank Outlet Valve – Exploded View

41. Cleaning and Inspection. Clean and inspect the tank outlet valves as follows:

a. Clean all components with a cleaning agent then blow them dry with compressed air.

b. Check the top and bottom shafts for wear or damage and replace them as necessary.

c. Check the condition of the shaft bores in the valve body. If excessive wear or elongation of the bores is evident, replace the valve body.

d. Check the condition of the disc seat. If excessive wear or scoring is evident, replace the valve body.

e. Check the condition of the rubber boot and replace it if worn or damaged.

f. Check the disc edge for damage and check the shaft bosses for excessive wear and replace the disc as necessary.

42. Assembly. Assemble the tank outlet valves as follows:

a. Coat a new disc O ring with XG-315.

CAUTION

Do not install the O ring by rolling it up the side of the disc into the groove, as it will twist, resulting in early failure.

b. Ensure that the groove in the disc is clean then place the O ring about half way round the disc groove and hold it in position with one hand, while pulling the O ring into position with the index finger of the other hand.

c. With the index finger still under the O ring, rotate the disc to completely equalize the O ring tension around the disc.

d. Press the O ring into the groove of the disc at four equally spaced points, then continue pressing it into place at points between the original four and alternately opposite, until the entire O ring is smooth and evenly secured.

e. Coat a new bottom shaft O ring with XG-315 then fit it into the groove on the bottom shaft.

f. Apply XG-315 to the disc bearing surface of the bottom shaft, then carefully install the bottom shaft into the valve body, ensuring that the O ring is not damaged then pull the shaft out just far enough to enable the disc to be installed.

g. Apply XG-315 to the full length of the top shaft, then insert the shaft into the top bore of the valve body just far enough to enable the disc to be installed.

h. Install the disc, ensuring that the top and bottom bosses on the disc align with the shafts.

i. Push the bottom shaft into the valve to engage the bearing surface of the shaft with the boss on the disc.

j. Align the roll pin holes in the shaft and the valve body then install the roll pin.

k. Push the top shaft into position, ensuring that the shaft is properly seated in the disc boss, then install the shaft retaining screw and washer into the valve body and tighten it securely.

l. Check that the disc rotates smoothly and seats on the raised sealing surface.

m. Insert the flange sealing O rings into the grooves in the valve body.

NOTE

Avoid stretching the O rings by first pressing them into place at four points, then pressing them into place alternately at points between the original four until the O rings are smooth and evenly secured.

n. Coat a new top shaft O ring with XG-315 then install it on the top shaft.

o. Install the steel thrust washer and the Teflon thrust washer onto the top shaft then install the rubber boot.

p. Install the operating handle into the same position as noted at disassembly then tighten the locking screw to secure the handle in position.

43. Installation. Install the tank outlet valves in accordance with EMEI Vehicle G 743.

Fuel Pump Inlet/Outlet Valves

44. Removal. Remove the fuel pump inlet/outlet valves in accordance with EMEI Vehicle G 743.

45. Disassembly. The disassembly procedure is identical to the tank outlet valves (Para 40).

46. Cleaning and Inspection. The cleaning and inspection procedures are identical to the tank outlet valves (Para 41).

47. Assembly. The reassembly procedure is identical to the tank outlet valves (Para 42).

48. Installation. Install the fuel pump inlet/outlet valves in accordance with EMEI Vehicle G 743.

Manifold Inlet/Outlet Valve

49. Removal. Remove the manifold inlet/outlet valve as follows:

a. Clean the manifold inlet/outlet valve and the surrounding area with a cleaning agent then blow them dry with compressed air.

b. Close the tank outlet valves, then place a receptacle beneath the fuel pump.

c. Disconnect the pump-to-manifold flexible hose at the pump end and direct the end of the hose into the receptacle.

d. Open the manifold inlet /outlet valve to allow any fuel in the manifold to drain out.

e. Disconnect the flexible hose from the inlet/outlet valve at the manifold.

f. Remove the bolts, nuts and washers securing the valve to the manifold and remove it.

50. Disassembly. Disassemble the manifold inlet/outlet valve in accordance with Para 40.

51. Cleaning and Inspection. Clean and inspect the manifold inlet/outlet valve in accordance with Para 41.

52. Assembly. Reassemble the manifold inlet/outlet valve in accordance with Para 42.

53. Installation. Install the manifold inlet/outlet valve as follows:

a. Position the inlet/outlet valve on the manifold flange, then install the retaining bolts, nuts and washers and torque to them 33 to 37 N.m (24 to 27 lbf.ft).

b. Reconnect the flexible hose to the inlet/outlet valve on the manifold and to the pipe at the pump.

c. Check the valve for leaks and rectify it as necessary.

API Openable Adapter

54. Removal. Remove the API openable adapter as follows:

a. Clean the API openable adapter and the surrounding area, then blow them dry with compressed air.

b. Place a receptacle beneath the fuel pump end of the flexible hose.

c. Close the tank outlet valves, open the manifold inlet/outlet valve then disconnect the flexible hose at the fuel pump pipe.

d. Drain the fuel from the manifold and flexible hose into the receptacle then reconnect the flexible hose to the fuel pump pipe.

e. Support the API openable adapter, then remove the bolts, nuts and washers securing the adapter to the manifold and remove the adapter.

55. Disassembly. Disassemble the API openable adapter as follows:

a. Remove the cam lock reducing adapter from the API openable adapter.

b. Remove the screws, nuts and washers securing the nose piece to the openable adapter and remove the nose piece (Figure 26).

c. Remove the O rings from the grooves in the adapter body and discard them.

d. Suitably support the shaft and the valve disc, then remove the roll pin securing the valve disc to the shaft and remove the valve disc and the spring.

e. Remove the O ring from the valve disc and discard it.

f. Remove the circlip securing the lever link to the lever then unhook the lever return spring.

g. Remove the pivot bolt and washers then lift the lever and spring away from the adapter body.

h. Remove the circlip securing the lever link to the cam and remove the lever link

i. Remove the pinch bolt and nut securing the cam to the spindle and remove the cam.

j. Remove the circlips from the shaft link pivot pins, drive the pivot pins out, then remove the shaft link and pivot pins.

k. Remove the roll pin securing the arm to the spindle, then remove the gland nut, the fibre washer and the O ring from the adapter body.

l. Slide the spindle out from the arm then remove the spindle and the arm from the adapter body.

m. Before removing the shaft from the adapter body, check for excessive play between the shaft and the bush.

n. If necessary, remove the bush by suitably supporting the adapter housing in a press then press the bush out with the aid of an arbour.

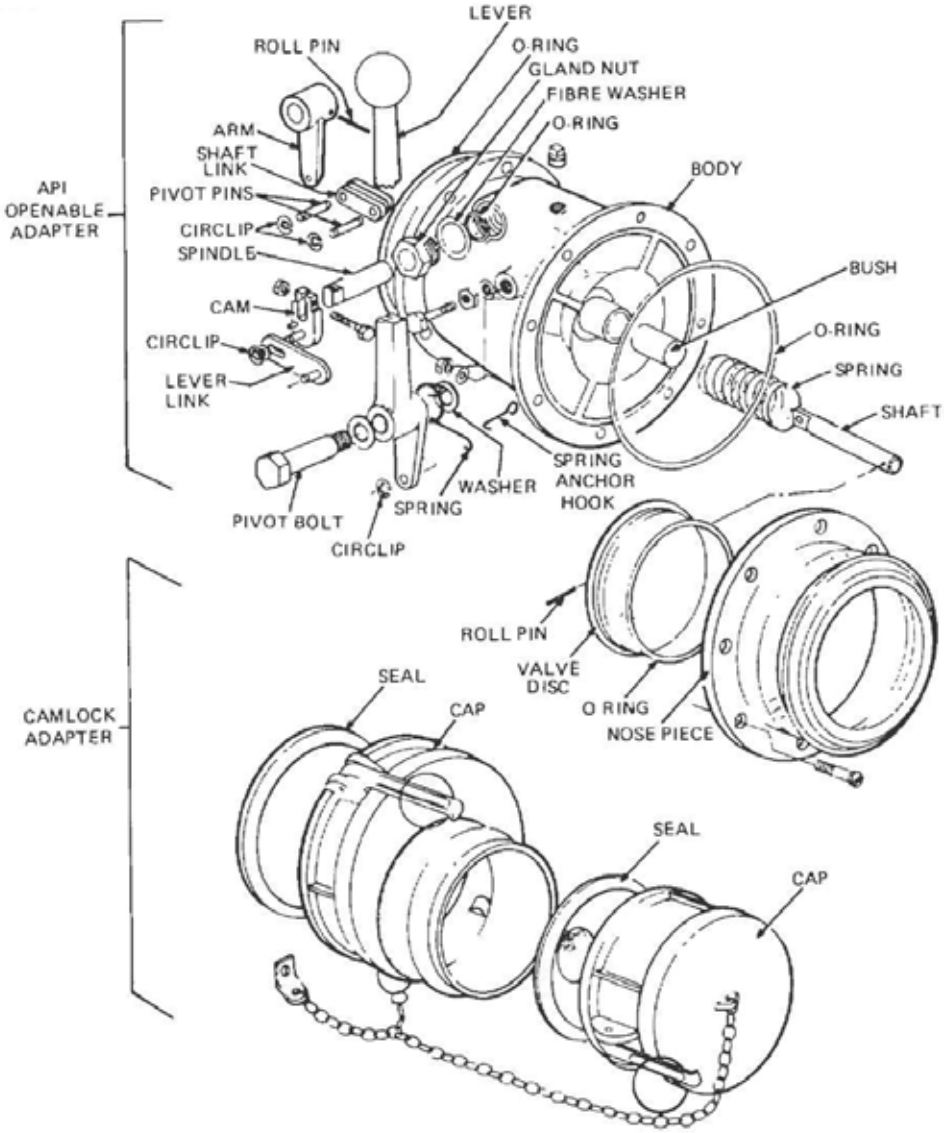

Figure 26 API Openable Adapter – Exploded View

56. Cleaning and Inspection. Clean and inspect the API openable adapter as follows:

a. Clean all components with a cleaning agent then blow them dry with compressed air.

b. Check all parts for wear or damage and replace them as necessary.

c. Check the condition of the seals in the cam lock reducing adapter and dust cap and replace them as necessary.

57. Assembly. Assemble the API openable adapter as follows:

a. If the shaft bush was removed from the openable adapter body, install a new bush.

b. Place the adapter body in a press and suitably support the body.

c. Position the new bush in the body and press it into place with the aid of an arbour.

d. Smear the shaft with XG-315 then insert it into the bush (with the flats of the shaft towards the manifold mounting face of the body).

e. Smear the spindle and the bore of the arm with XG-315.

f. Position the arm in the adapter body and insert the spindle through the body and the bore of the arm.

g. A1ign the roll pin holes in the arm and the spindle and insert the roll pin.

h. Position a new O ring and fibre washer over the spindle, then install the gland nut, but do not tighten the nut down.

i. Position the shaft link between the shaft and the arm.

j. Insert the pivot pins through the holes in the arm, the shaft and the shaft link, then position the circlips on the ends of the pivot pins.

k. Position the cam on the flats on the end of the spindle, then install and tighten the pinch bolt and nut.

l. Position the lever link on the pin of the cam, then install the washer and circlip onto the pin to secure the lever link to the cam.

m. Place a washer on the pivot bolt, then smear the lever bearing surface of the bolt with grease (XG-291), then position the lever, the lever return spring and the washer on the pivot bolt.

n. Align the pin on the lever link with the hole in the end of the lever then screw the pivot bolt into the adapter body and tighten the bolt securely.

o. Install a circlip onto the lever link pin to secure the lever link to the lever.

p. Operate the lever back and forth to ensure that the shaft moves in conjunction with the movement of the lever and that the operation is smooth and without drag.

q. Push the lever into the closed position so that the shaft extends out from the adapter body.

r. Install the spring over the shaft and position the valve disc on the end of the shaft.

s. Align the roll pin holes in the disc spigot and the shaft then install the roll pin.

t. Insert new O rings into the groove on the nose piece mounting surface of the adapter body and into the groove in the valve disc.

u. Position the nose piece on the adapter body then insert the retaining screws, nuts and washers.

v. Ensure that the lever return spring anchor hook, cam lock reducing adapter and dust cap chain anchor are correctly positioned and tighten the screws and nuts securely.

w. Position the lever return-spring on the lever then engage the end of the spring with the anchor hook.

x. Operate the lever back and forth to ensure that the valve disc seats evenly in the nose piece each time the valve is closed.

y. Insert a new O ring into the groove of the manifold mounting surface of the adapter body.

z. Install the cam lock reducing adapter and dust cap assembly onto the openable adapter nose piece.

58. Installation. Install the API openable adapter as follows:

a. Position the API openable adapter assembly on the manifold.

b. Install the retaining bolts, nuts and washers and torque them to 33 to 37 N.m (24 to 27 lbf.ft).

c. Open the tank outlet valves and allow fuel to flow into the openable adapter.

NOTE

If fuel leaks past the gland nut, tighten the nut slightly to stop the fuel leak, but do not over-tighten it, otherwise the fibre washer and the O ring may be damaged.

d. Close the tank outlet valves.

Non-return Valve

59. Removal. Remove the non-return valve in accordance with EMEI Vehicle G 743.

60. Disassembly. Disassemble the non-return valve as follows:

a. Remove the four square head pin retainers from the top and bottom of the valve (Figure 27), then drive the stop pin (spring anchor pin) from the valve body using a hammer and a drift.

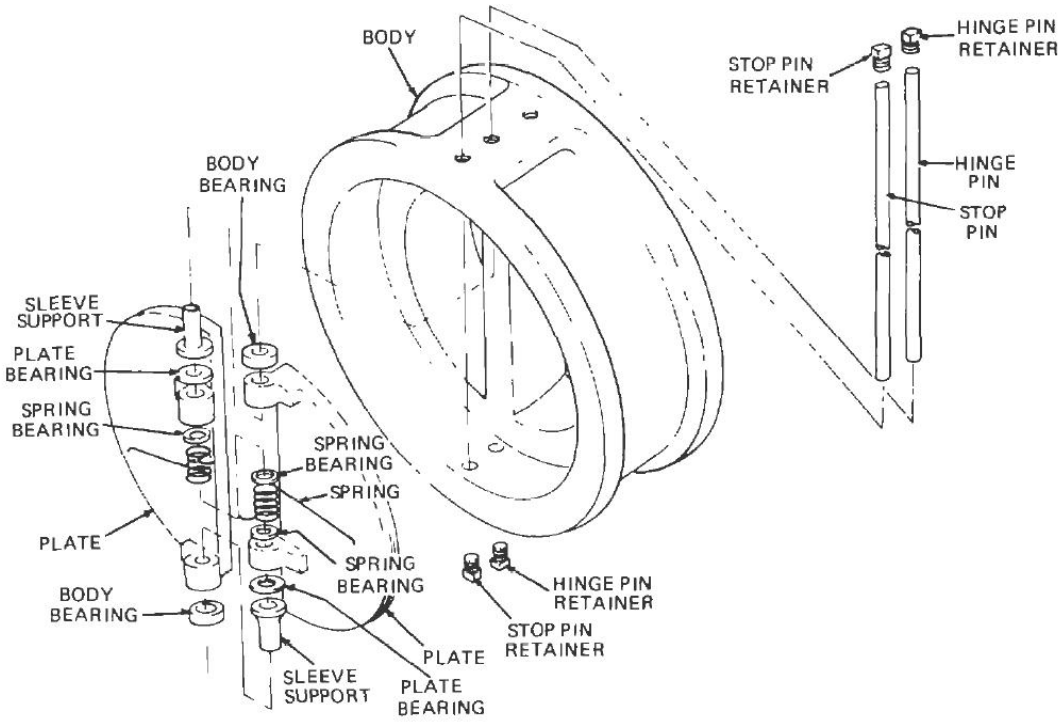

Figure 27 Non-return Valve – Exploded View

b. Remove the hinge pin from the valve body and remove the springs, the spring bearings, the plate bearings and the valve plates.

c. Remove the support sleeves and body bearings from the valve plates.

61. Cleaning and Inspection. Clean and inspect the non-return valve as follows:

a. Clean all the parts with a cleaning agent and then blow them dry with compressed air.

b. Check the condition of the seal on the valve plates and if worn or damaged replace the valve plates.

c. Check the condition of the valve body for worn or elongated stop pin or hinge pin holes and worn or pitted sealing surface and replace the valve body as necessary.

d. Check the hinge pin, stop pin and springs for wear or damage and replace them as necessary.

e. Check the condition of the support sleeves, the plate bearings and the spring bearings and replace them if worn or damaged.

62. Assembly. Assemble the non-return valve as follows:

a. Install the support sleeves in the outer hinge of the valve plates then position the body bearings over the support sleeves.

b. Place the valve plates in the valve body, aligning the hinges with the hinge pin holes then install the body bearings.

c. Insert the stop pin into the valve body, then install and tighten the pin retainers.

d. Insert the hinge pin into the valve body until the pin protrudes past the second hinge.

e. Install a spring bearing onto the end of the pin, then position one of the springs in the valve.

f. Place the hook of the spring over the stop pin and the leg of the spring on the valve plate.

g. Push the spring into position, then push or tap the hinge pin further into the valve body until the end of the pin protrudes past the spring.

h. Install the remaining spring bearing onto the pin then tap the pin into the valve body.

i. Install and tighten the hinge pin retainers.

63. Installation. Install the non-return valve in accordance with EMEI Vehicle G 743.

Hose Reel Isolation Valves

64. Remove, clean and inspect and install the hose reel isolation valves in accordance with EMEI Vehicle G 743.

Hose Nozzle

65. Removal. Remove the hose nozzle in accordance with EMEI Vehicle G 743.

66. Disassembly. Disassemble the hose nozzle as follows:

- **a.** Install the hose nozzle in a soft-jawed vice.
- **b.** Remove the screw securing the earth lead to the valve body and remove the earth lead (Figure 28).
- **c.** Remove the swivel assembly sleeve from the swivel outer body then remove the swivel outer body from the nozzle and discard the O ring.
- **d.** Position a screwdriver in the slot in the end of the valve stem located in the bore of the valve body.
- **e.** Hold the valve stem in position while removing the nut, the large washer, the valve disc and the small washer from the other end of the valve stem and remove the valve stem and spring from the bore of the valve body.
- **f.** Remove the circlip, thrust washer, Teflon washer, sleeve, tape bearing and O ring from the valve body and discard the O ring.
- **g.** Remove the cap from the top of the nozzle then lift out the spring and the upper and lower disc assemblies.
- **h.** Remove the spring retainer from the bottom of the nozzle body through the opening in the top of the nozzle body then remove the spring, the stem, the gland and the packing from the nozzle body.
- **i.** To disassemble the disc assemblies, clamp the disc holders (in turn) in a soft-jawed vice then remove the nut, the washer and the disc from the holder.
- **j.** Remove the holder from the vice.
- **k.** Unscrew the spout from the nozzle body then remove the check valve and strainer from the spout.
- **l.** Remove the split pin; pivot pin and lever from the nozzle body, then remove the nozzle body from the vice.
- **m.** Disassemble the check valve by pressing the fingers of the poppet in towards the centre of the spring cap then lift the spring cap away from the fingers.
- **n.** Remove the spring then withdraw the poppet from the valve body.
- **o.** Remove and discard the O rings.

67. Cleaning and Inspection. Clean and inspect the hose nozzle as follows:

- **a.** Clean all components then blow them dry with compressed air.
- **b.** Check the springs for wear, distortion or damage and replace the springs as necessary.
- **c.** Check the nozzle body for wear or damage and replace it as necessary.
- **d.** Check all other parts for wear or damage and replace them as necessary.
- **e.** Replace the discs and the thrust washer.

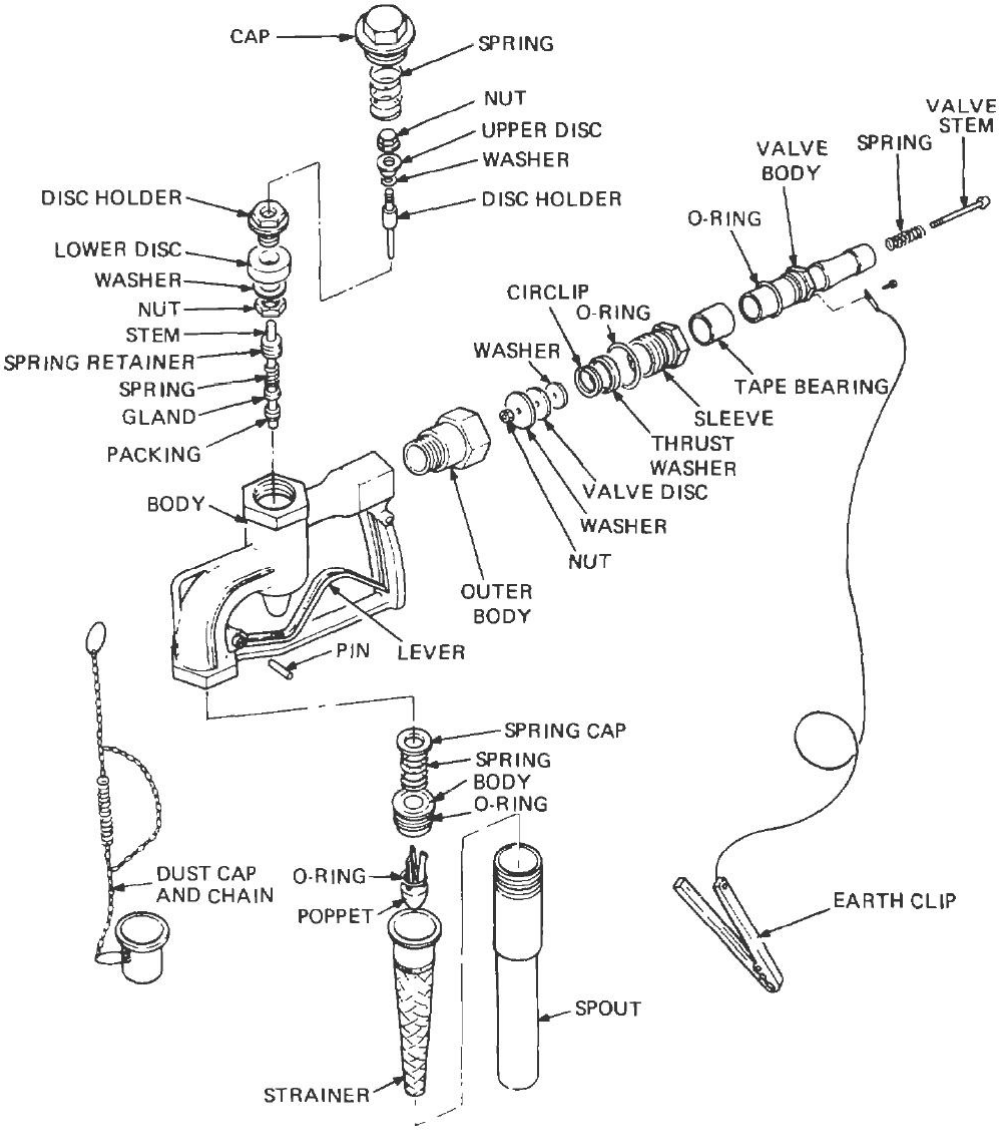

Figure 28 Hose Nozzle – Exploded View

68. Assembly. Assemble the hose nozzle as follows:

a. Install the lever, pivot pin and split pin into the nozzle body.

b. Position the stem in the nozzle body then install the packing into the nozzle body around the stem.

c. Insert the packing gland over the packing then install the spring and spring retainer.

d. Tighten the spring retainer securely.

e. In turn, position each of the disc holders in a soft-jawed vice and install the washer, the new disc and the nut and tighten the nut securely.

f. Install the lower disc into the nozzle body then install the upper disc into the lower disc.

g. Position the spring over the upper disc then install the cap.

h. Install a new O ring on the check valve poppet then insert the poppet into the check valve body.

i. Install the spring in the check valve body and position the spring cap over the spring.

j. Press the poppet fingers towards the centre of the spring cap to assist the spring cap to be installed over the lugs on the ends of the poppet fingers.

k. Release the fingers so that the lugs will retain the spring cap in position.

l. Install a new O ring on the check valve body.

m. Insert the strainer and the check valve into the threaded end of the spout then install the spout into the nozzle body.

n. Install a new O ring and a new tape bearing on the valve body.

o. Install a new O ring on the sleeve and slide the sleeve over the tape bearing.

p. Install a new Teflon thrust washer and a new steel thrust washer on the valve body, against the end of the sleeve.

q. Install a new circlip into the groove in the valve body to retain the thrust washers and sleeve on the valve body.

r. Check that there is no clearance between the sleeve and the Teflon thrust washer. If a clearance exists, remove the circlip, thrust washers and sleeve.

s. Install the spring on the valve stem then insert the valve stem into the bore of the valve body.

t. Hold the valve stem in position with a screwdriver then install the small washer, a new valve disc, the larger washer and the nut onto the threaded end of the valve stem and tighten the nut securely.

u. Install the sleeve and valve body assembly into the outer body then install the swivel outer body into the nozzle.

v. Position the nozzle assembly in a soft-jawed vice, then tighten the spout, the cap, and the swivel outer body onto the nozzle and tighten the sleeve into the swivel outer body.

w. Position the earth lead on the swivel valve body.

x. Install and tighten the screw securing the lead to the swivel valve body.

69. Installation. Install the hose nozzle in accordance with EMEI Vehicle G 743.

Hold-Back Valve

70. Removal. Remove the hold-back valve in accordance with EMEI Vehicle G 743.

71. Disassembly. Disassemble the hold-back valve as follows:

a. Match mark the two halves of the valve body.

b. Remove the four screws from the valve body and separate the two halves of the valve (Figure 29).

c. Remove the rubber valve, the valve plate and spring from the valve body.

d. Pry the O ring from the groove in the valve body and discard the O ring and rubber valve.

72. Cleaning and Inspection. Clean and inspect the hold-back valve as follows:

a. Clean the valve body spring and valve plate then blow them dry with compressed air.

b. Check the two halves of the valve body, the spring and the valve plate for wear, damage, rust or corrosion and replace them as necessary.

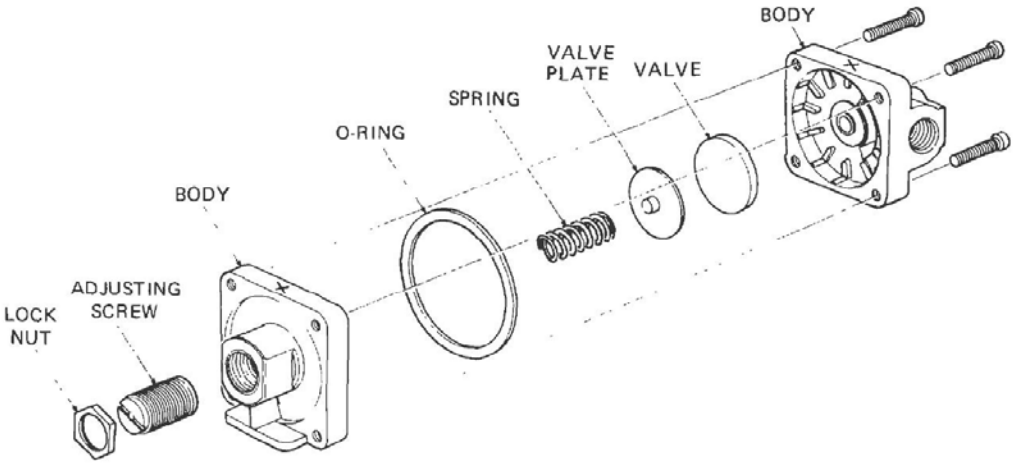

Figure 29 Hold-Back Valve – Exploded View

73. Assembly. Assemble the hold-back valve as follows:

a. Lubricate the spring, valve plate and rubber valve with XG-315.

b. Insert the spring into the bore of the valve body and onto the adjusting screw.

c. Position the valve plate and a new rubber valve (flat side onto the valve plate) over the spring.

d. Insert a new O ring into the groove in the valve body.

e. Position the two halves of the valve body together (align the match marks), install and tighten the four screws.

74. Installation. Install the hold-back valve in accordance with EMEI Vehicle G 743.

Poppet Valve

75. Removal. Remove the poppet valve in accordance with EMEI Vehicle G 743.

76. Disassembly. Disassemble the poppet valve as follows:

a. Place the poppet valve in a soft-jawed vice and remove the vent plug from the valve body. Note the port number from which the vent plug was removed.

b. Remove the connector, plunger and top spring from the top of the valve body (Figure 30).

c. Remove the plug, washer, bottom spring and the piston from the bottom of the valve body and discard the washer.

d. Remove and discard the O rings from the plunger and piston.

e. Remove the valve body from the vice.

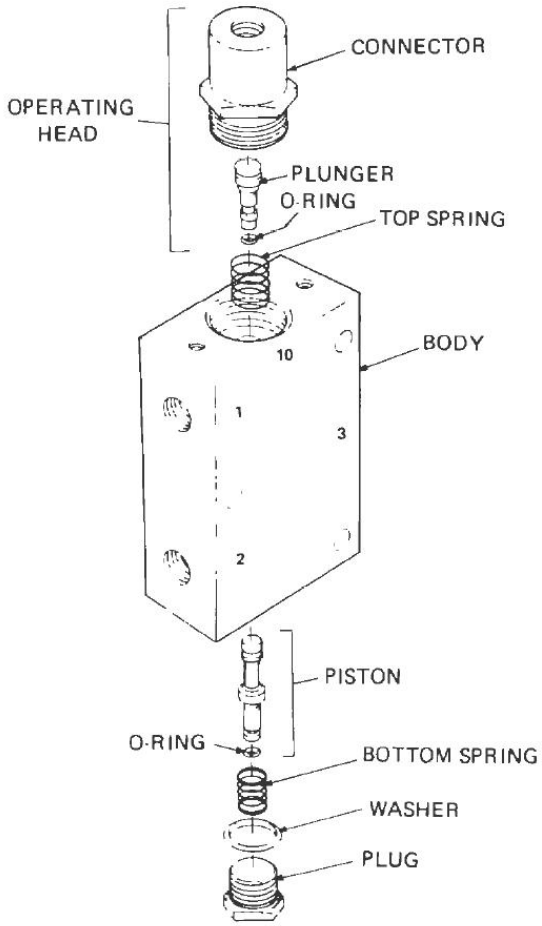

Figure 30 Poppet Valve – Exploded View

77. Cleaning and Inspection. Clean and inspect the poppet valve as follows:

a. Clean all components then blow them dry with compressed air.

b. Check the plunger and piston for wear or damage and replace them as necessary.

c. Check the top and bottom springs for wear or damage and replace them as necessary.

d. Check the condition of the bore of the valve body. If excessive wear, scoring or damage is evident, replace the complete valve assembly.

e. Check the vent plug for blockage or damage and replace it as necessary.

78. Assembly. Assemble the poppet valve as follows:

a. Using XG-315, lubricate the new O rings and install them onto the plunger and the piston.

b. Apply XG-315 to the piston then install it into the valve bore.

c. Install the bottom spring into the valve bore then place a new washer on the plug and install the plug into the valve body.

d. Apply XG-315 to the plunger then install the top spring, the plunger and the connector into the valve body.

e. Install the vent plug into the valve body port noted on disassembly.

f. Place the poppet valve assembly in a soft-jawed vice.

g. Securely tighten the connector, plug and vent plug then remove the valve assembly from the vice.

79. Installation. Install the poppet valve in accordance with EMEI Vehicle G 743.

Flow Control Valve

80. Removal. Remove the flow control valve in accordance with EMEI Vehicle G 743.

81. Disassembly. Disassemble the flow control valve as follows:

a. Place the valve assembly in a soft-jawed vice and slacken the locknut on the adjusting spindle, then remove the ferrule and adjusting spindle assembly from the valve body (Figure 31).

b. Remove the air line connectors from the valve body and valve seat.

c. Remove the valve seat, valve spring and the valve from the valve body and discard the O ring.

d. Remove the adjusting spindle from the ferrule and discard the O rings.

82. Cleaning and Inspection. Clean and inspect the flow control valve as follows:

a. Clean all parts then blow them dry with compressed air.

b. Check the position of the adjusting spindle, the valve and the valve spring and replace parts as necessary.

c. Check the condition of the bores of the valve body and the valve seat. If worn or damaged, replace the valve assembly.

83. Assembly. Assemble the flow control valve as follows:

a. Lubricate the valve and O rings with XG-315 then assemble new O rings onto the valve seat, the ferrule and the adjusting spindle.

b. Apply XG-315 to the valve then install the valve and valve spring in the valve seat.

c. Install the valve and valve seat assembly into the valve body.

d. Screw the adjusting spindle into the ferrule then install the ferrule and adjusting spindle assembly into the valve body.

e. Place the valve assembly in a soft-jawed vice and tighten securely both the valve seat and the ferrule.

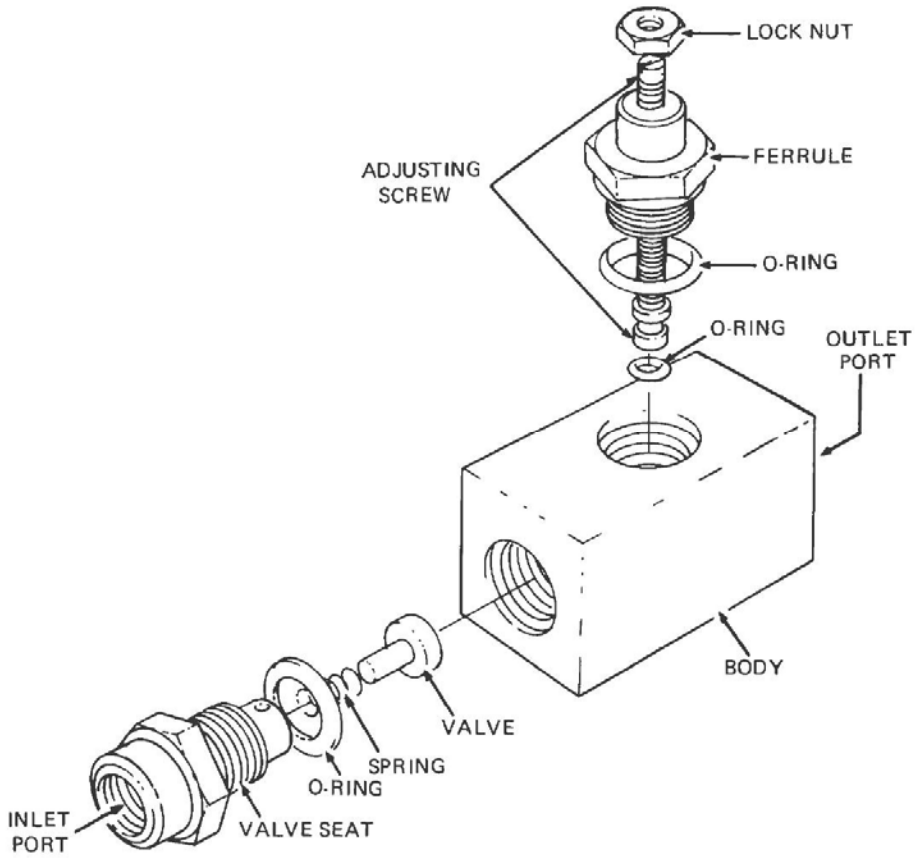

Figure 31 Flow Control Valve – Exploded View

f. Using a screwdriver, screw the adjusting spindle in (clockwise) until it bottoms, then back it out one complete turn.

g. Install the locknut then tighten it against the ferrule to lock the adjusting spindle in position.

h. Remove the valve assembly from the vice.

i. Install the air line connectors into the valve body and valve seat.

84. Installation. Install the flow control valve in accordance with EMEI Vehicle G 743.

Control Button Valve

85. Removal. Remove the control button valve as follows:

a. Remove the screws and nuts securing the control valve block (containing the defective control button valve) to the control box mounting.

b. Remove the four clamp rings securing the control button valve to the control valve block and separate the control button valves.

c. Disconnect the air lines from the control button valve and remove the valve from the control box.

86. Disassembly. Disassemble the control button valve as follows:

a. Remove the two clamp rings securing the top cover to the housing and lift the top cover from the housing (Figure 32).

b. If necessary, pull the transparent cap from the top cover.

c. Lift the red indicator from the piston, then lift the piston and guide assembly from the housing.

d. Remove the seals from the piston and guide assembly and discard the seals.

e. Remove the U-pin from the housing then remove the button and discard the O ring.

f. Remove the connectors from the side of the housing, taking note of the positions of the drilled and non-drilled connectors and discard the O rings.

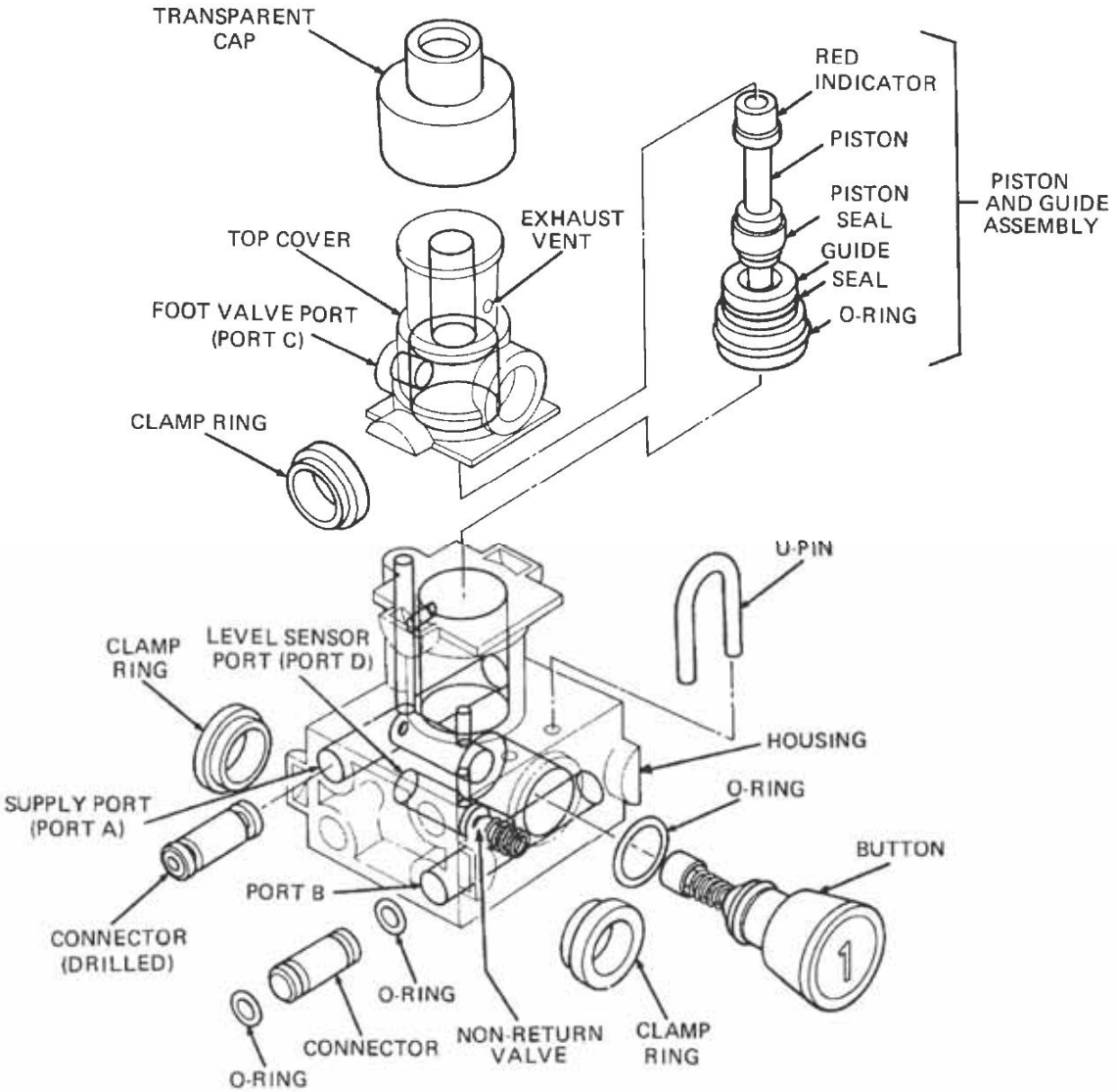

Figure 32 Control Button Valve – Exploded View

87. Cleaning and Inspection. Clean and inspect the control button valve as follows:

a. Clean all components then blow them dry with moisture-free compressed air.

b. Inspect the housing, the piston and the guide for excessive wear or scoring and replace parts as necessary.

88. Assembly. Assemble the control button valve as follows:

a. Apply rubber grease to the new seals, the pistons and the guide.

b. Install the seals onto the piston and guide then insert the piston and guide assembly into the housing.

c. Install the red indicator on the piston then position the top cover over the piston and onto the housing.

d. Install the two clamp rings, with the cones facing outward to secure the top cover to the housing.

e. If the transparent cover was removed, push the transparent cover onto the top cover.

f. Smear the button spring and shaft and the new O ring with rubber grease.

g. Install the O ring onto the button then insert the button into the housing.

h. Insert the U-pin into the housing to retain the button.

i. Lightly smear the connectors and the new O ring with rubber grease then position it onto the connectors.

j. Insert the connectors into the housing, into the same positions as previously noted (Para 86.f)

89. Installation. Install the control button valve as follows:

a. Install the control button valve into its original position in the valve block.

b. Align the connectors and push the block together.

c. Install the four clamp rings to secure the control button valves together then install the air lines into their correct positions.

d. Position the control valve block on the mounting bracket, then install and tighten the screws, nuts and washers.

e. Operate the controls to ensure that the control button valve is working correctly.

Pump Control Valve

90. Removal. Remove the pump control valve in accordance with EMEI Vehicle G 743.

91. Disassembly. Disassemble the pump control valve as follows:

a. Unscrew the exhaust vent from the outlet port body, then remove the plug, the inner and outer springs and the cap from the valve body (Figure 33).

b. Remove the four screws securing the two sections of the body together and separate them.

c. Remove the O ring, the slide, the slide springs, the spindle, the thrust washer and the spindle O ring and discard the O rings.

92. Cleaning and Inspection. Clean and inspect the pump control valve as follows:

a. Clean all parts then blow them dry with compressed air.

b. Inspect the valve assembly for wear or damage. If excessive wear or damage is evident, replace the valve assembly.

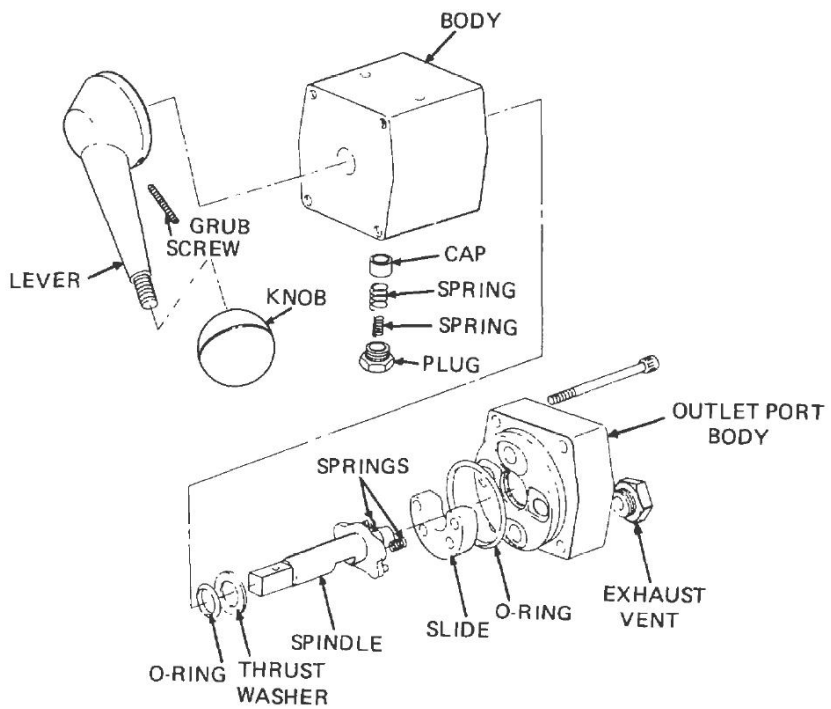

Figure 33 Pump Control Valve – Exploded View

93. Assembly. Assemble the pump control valve as follows:

a. Prior to reassembly, lubricate the internal components with waterproof grease.

b. Position the thrust washer and a new O ring on the spindle then insert the spindle in the valve body.

c. Position the valve body so that the outlet port body mounting face is uppermost.

d. Install the slide springs on the spindle and position the slide over the springs and locating lugs on the spindle.

e. Install a new O ring onto the spigot on the outlet port body, position the outlet port body on the valve body, taking care not to dislodge the slide springs from the slide then install and tighten the four retaining screws.

f. Install the exhaust vent into the outlet port body and tighten it securely.

g. Insert the cap and both the outer and inner springs into the valve body, then install the plug and tighten it securely.

h. Position the lever on the end of the spindle, but do not tighten the grub screw.

i. Check that the valve functions correctly by supplying air under pressure to the inlet port and checking for air leaks in the valve body, and that the air flows through the outlet ports as each port is selected, rectifying any leaks as necessary.

94. Installation. Install the pump control valve in accordance with EMEI Vehicle G 743.

Level Sensor

WARNING

The TRAM safety system (if fitted) is to be used at all times when working at heights on the fuel tank body.

95. Removal. Remove the level sensor in accordance with EMEI Vehicle G 743.

96. Disassembly. Disassemble the level sensor as follows:

a. Remove the four socket head bolts from the cover then lift the cover from the sensor body.

b. Remove the bolts from the adjusting cap, lift the cap from the cover and discard the O rings.

c. Remove the spring, pressure pad, diaphragm, valve pin and O rings from the top of the sensor body (Figure 34) and discard the O rings and the diaphragm.

d. Invert the sensor body and remove the ball valve.

e. Place the sensor body (top down) on the bench.

f. Remove the tube and connection from the base of the sensor body and discard the O ring.

g. Remove the bolts from the valve cover and remove the cover from the sensor body.

h. Remove the piston sleeve and spring from the sensor body and discard the O ring and seal.

i. Remove the valve base and the non-return valve and spring from the sensor body and discard the O ring.

97. Cleaning and Inspection. Clean and inspect the level sensor as follows:

a. Clean all parts then blow them dry with compressed air.

b. Inspect the sensor body for damage or blockage of the air passages and repair or replace the sensor body as necessary.

c. Inspect the valve components for wear or damage and replace them as necessary.

d. Check the spindle, spring collar and locating pin in the adjusting cap for wear or damage. If excessive wear or damage of these components is evident, replace the adjusting cap.

98. Assembly. Assemble the level sensor as follows:

a. Position the non-return valve and spring in the sensor body then install the valve base and a new O ring.

b. Insert the valve sleeve and butt it against the O ring on the valve base then insert the valve spring.

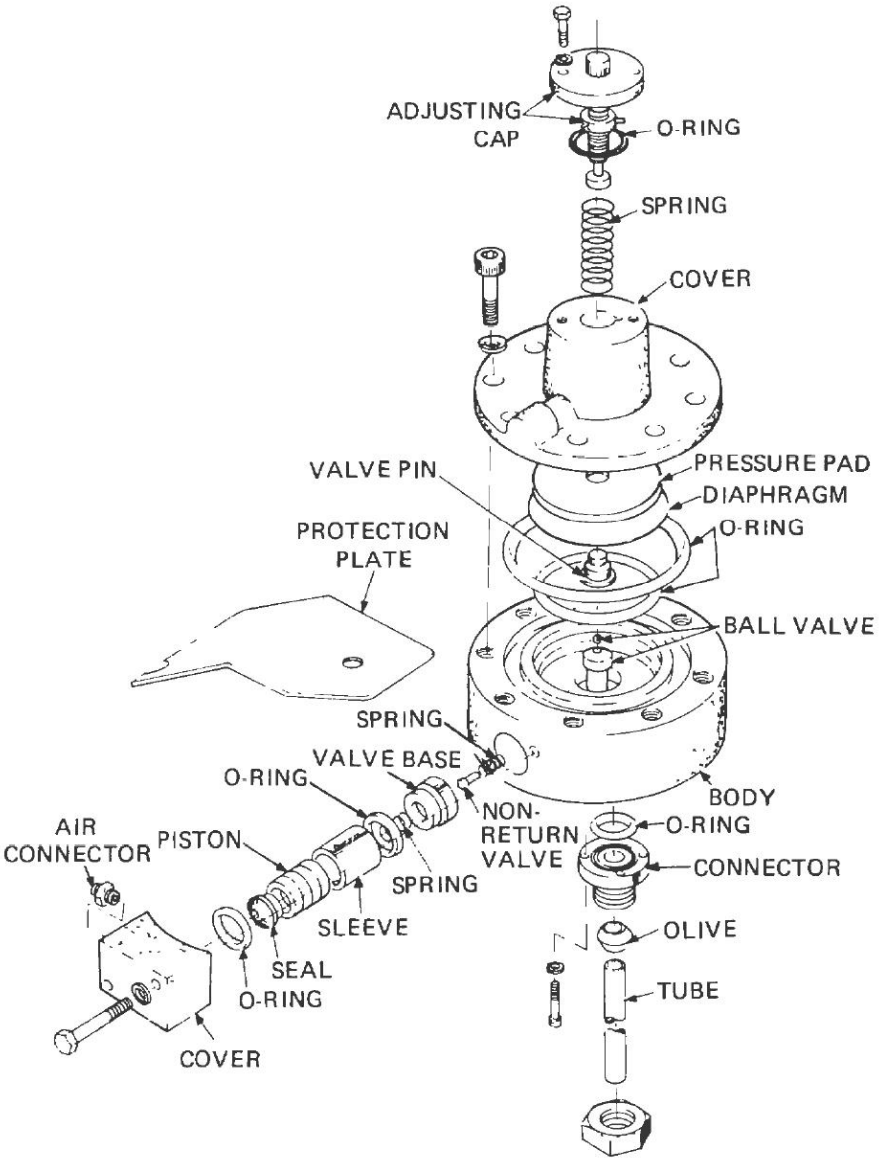

Figure 34 Level Sensor – Exploded View

c. Insert a new valve seal in the piston then install the piston and seal assembly into the sleeve and over the valve spring.

d. Insert a new O ring over the valve sleeve then install the valve cover over the valve assembly then install and tighten the retaining bolts.

e. Place the sensor body on its base and install the ball valve.

f. Insert two new O rings into the grooves in the top face of the sensor body, then position the valve pin over the ball valve.

g. Position a new diaphragm in the sensor body, then sit the pressure pad on the diaphragm.

h. Position the spring on the pressure pad then install the cover. Ensure the spring is aligned with the bore of the cover.

i. Install and tighten the four socket head retaining bolts to secure the cover.

j. Insert a new O ring in the groove on the adjusting cap.

k. Position the cap on the cover, aligning the locating pin in the spring collar with the groove in the cover then install the two retaining bolts, but do not tighten them.

l. Insert a new O ring in the tube connector then install the tube and the connector onto the base of the sensor body.

99. Installation. Install the level sensor in accordance with EMEI Vehicle G 743.

100. Calibration. Calibrate the level sensor in accordance with EMEI Vehicle G 743.

Vapour Transfer Vent

WARNING

The TRAM safety system (if fitted) is to be used at all times when working at heights on the fuel tank body.

101. Removal. Remove the vapour transfer vent in accordance with EMEI Vehicle G 743.

102. Disassembly. Disassemble the vapour transfer vent as follows:

a. Remove the six bolts and washers securing the cover to the vent body and remove the cover (Figure 35).

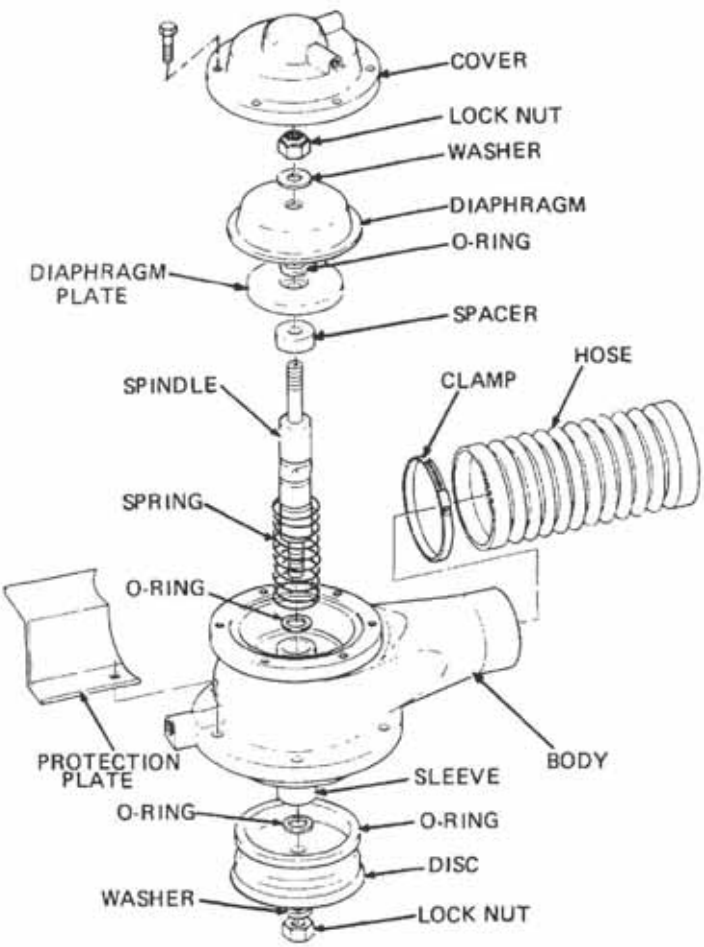

Figure 35 Vapour Transfer Vent – Exploded View

b. Position spanners on the nuts at each end of the spindle and, holding one spanner while turning the other, disassemble the vent as follows:

(1) If the nut at the bottom of the spindle is removed, remove the disc and O rings then remove the spindle, spring and O ring from the top of the vent body. Place the spindle in a soft-jawed vice and remove the nut, washer, diaphragm, O ring, diaphragm plate and spacer.

(2) If the nut at the top of the spindle is removed, remove the washer, diaphragm, O ring, diaphragm plate, spacer, spring and lower O ring. Place the spindle in a soft-jawed vice and remove the nut, disc and O rings.

c. Discard the diaphragm and all O rings.

103. Cleaning and Inspection. Clean and inspect the vapour transfer vent as follows:

a. Clean all parts then blow them dry with compressed air.

b. Inspect the vent body for damage and replace it as necessary.

c. Inspect the bore of the sleeve in the vent body for scoring or wear. The wear can be checked by inserting the spindle into the sleeve and checking the side clearance. If the side clearance is excessive, replace the sleeve.

NOTE

The sleeve can be removed by supporting the vent body in a press and pressing the sleeve from the body with the aid of an arbour.

d. Check the disc for wear or damage and replace it as necessary.

104. Assembly. Assemble the vapour transfer vent as follows:

a. If the sleeve was removed, press a new sleeve into the body, ensuring that the holes in the sleeve align with the orifice in the body.

b. Position the spacer, diaphragm plate and new O ring and a new diaphragm on the top end of the spindle.

c. Place the spindle in a soft-jawed vice, then install the washer and locknut and tighten it securely.

d. Remove the spindle from the vice and install new O rings on the spindle.

e. Apply rubber grease to the O rings then insert the spindle into the sleeve.

f. Install a new O ring onto the disc, position the disc on the spindle, then install the washer and nut onto the spindle and tighten it securely.

g. Position the diaphragm in the groove in the vent body then install the cover, ensuring that the diaphragm is correctly sandwiched between the cover and body.

h. Install the six bolts and washers into the cover and tighten them securely.

105. Installation. Install the vapour transfer vent in accordance with EMEI Vehicle G 743.

Pressure and Vacuum Vent

WARNING

The TRAM safety system (if fitted) is to be used at all times when working at heights on the fuel tank body.

106. Removal. Remove the pressure and vacuum vent in accordance with EMEI Vehicle G 743.

107. Disassembly. Disassemble the pressure and vacuum vent as follows:

a. Remove the circlip from the bottom of the pressure and vacuum vent (Figures 36 and 37).

b. Remove the lower ball cage complete with the ball, the lower valve seat, the vacuum valve spring and the O ring and discard the O ring.

c. Remove the screws securing the cover to the pressure and vacuum vent body and remove the cover and the pilot valve ball.

d. Remove the screws securing the gauze mesh to the pressure and vacuum vent body and remove the gauze mesh.

e. Remove the E-clip from the top of the pilot valve then remove the pilot valve, complete with the pressure and vacuum valves from the pressure and vacuum vent body.

f. Remove the pin from the bottom of the pressure valve and remove the pressure valve spring, the vacuum valve, the pilot valve spring and the pressure valve from the pilot valve.

g. Remove and discard the O ring from the pilot valve.

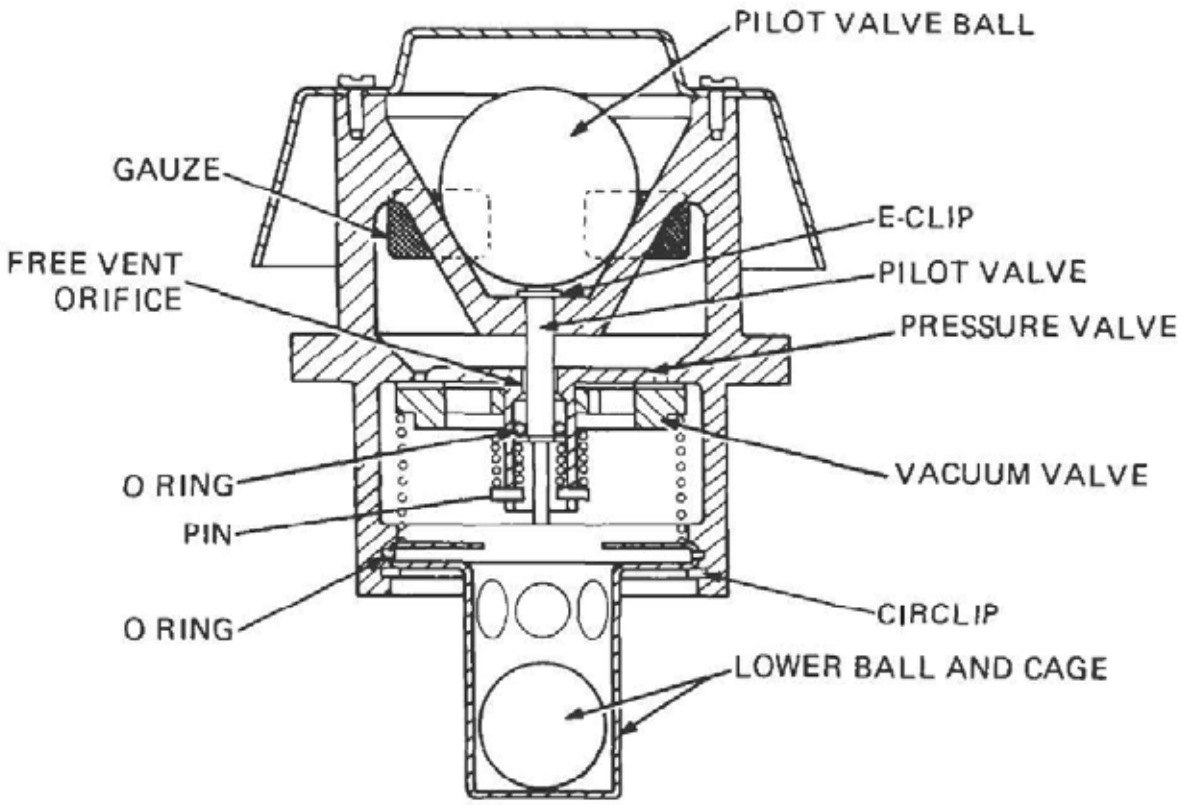

Figure 36 Pressure and Vacuum Vent – Sectional View

108. Cleaning and Inspection. Clean and inspect the pressure and vacuum vent as follows:

a. Clean all parts then blow them dry with compressed air.

b. Check the vacuum valve and pressure valve seats for wear and also check the vacuum valve rubbing surface of the pressure valve spigot for scoring or wear and replace the vacuum valve and/or the pressure valve as necessary.

c. Check the springs for wear, distortion or damage and replace them as necessary.

d. Check the pressure and vacuum vent body for damage or excessive wear on the vacuum valve seat and replace the pressure and vacuum vent body as necessary.

e. Check the gauze mesh for distortion or damage and replace it as necessary.

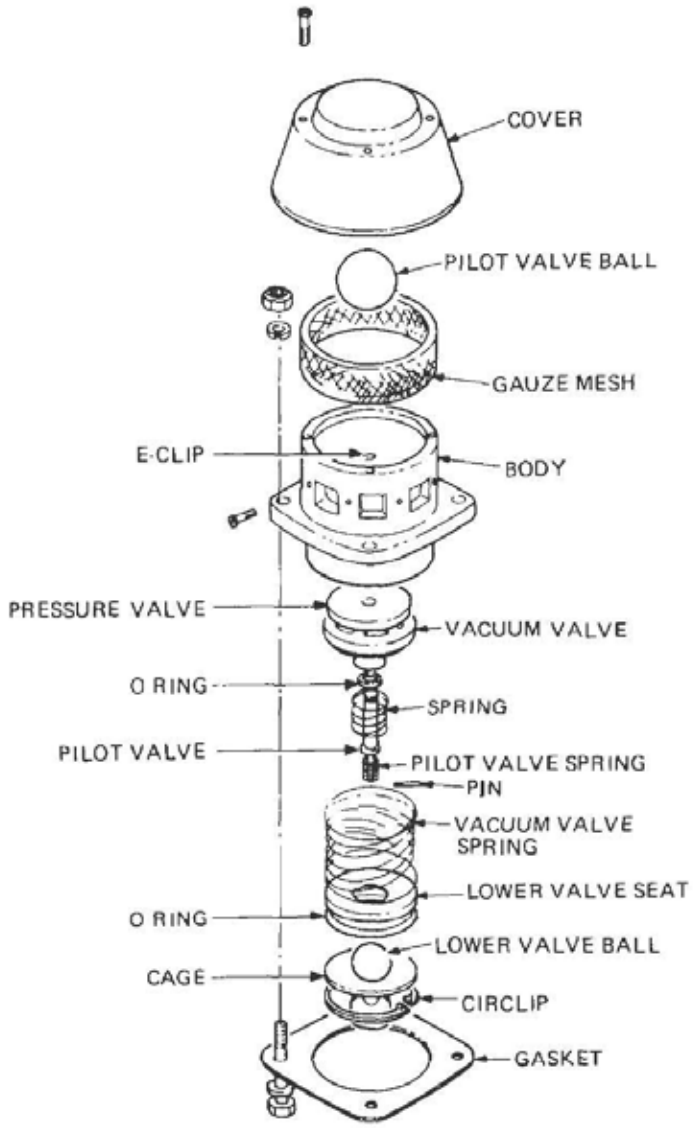

Figure 37 Pressure and Vacuum Vent – Exploded View

109. Assembly. Assemble the pressure and vacuum vent as follows:

a. Apply XG-315 to a new pilot valve O ring then install it onto the pilot valve.

b. Smear the pilot valve shank and the inside bore of the pressure valve spigot with XG-315, then insert the pilot valve into the bore of the pressure valve spigot.

c. Smear the outside surface of the pressure valve spigot with XG-315 then slide the vacuum valve onto the pressure valve spigot.

d. Insert the pilot valve spring into the bore of the pressure valve spigot and install the pressure valve spring over the spigot.

e. Compress the pressure valve spring and the pilot valve spring then insert the pin through the holes in the bottom of the pressure valve spigot. When installed, both ends of the pin should protrude from the pressure valve spigot to hold the pressure valve spring in position.

f. Install the valve assembly into the pressure and vacuum vent body then install the E-clip into the groove at the top of the pilot valve shank to secure the valve assembly in the pressure and vacuum vent body.

g. Insert a new O ring into the uppermost groove in the bottom of the pressure and vacuum vent body (Figure 38).

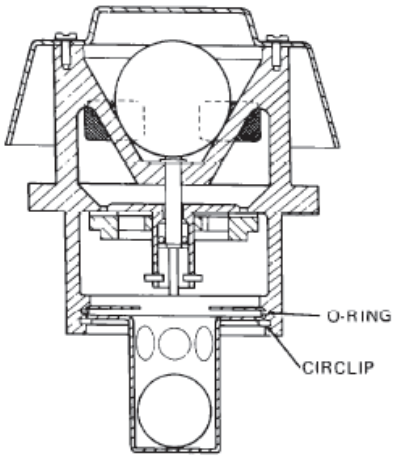

Figure 38 O ring Installation

h. Install the lower valve seat and the lower ball cage complete with the ball into the pressure and vacuum vent body, then insert the circlip to secure the valve seat and ball cage in position.

i. Place the gauze mesh in position around the top of the pressure and vacuum vent body.

j. Install the retaining screws to secure the gauze mesh in position.

k. Insert the pilot valve ball into the top of the pressure and vacuum vent body.

l. Position the cover over the top of the pressure and vacuum vent body then install and tighten the cover retaining screws.

110. Installation. Install the pressure and vacuum vent in accordance with EMEI Vehicle G 743.

Access Cover

WARNING

The TRAM safety system (if fitted) is to be used at all times when working at heights on the fuel tank body.

111. Removal. Remove the access cover in accordance with EMEI Vehicle G 743.

112. Disassembly. Disassemble the access cover as follows:

a. Remove the nuts and washers securing the pressure and vacuum vent to the cover and remove the vent and discard the gasket.

b. Remove the bolts and nuts from the locking lever and the over-arm hinges then remove the locking lever and the over-arm and inspection hatch assembly from the access cover.

c. Remove the bolt and nut from the over-arm and remove the inspection hatch and the spring.

d. Remove and discard the inspection hatch seal.

113. Cleaning and Inspection. Clean and inspect the access cover as follows:

a. Clean the cover, over-arm, inspection hatch and locking lever and blow them dry with compressed air.

b. Check the access cover for damage, particularly around the combing and inspection hole sealing surfaces. If damage is evident, replace the access cover.

c. Check the condition of the inspection hatch, the spring, the over-arm, the locking lever and the locking lever roller and pin and replace parts as necessary.

114. Assembly. Assemble the access cover as follows:

a. Install a new seal in the inspection hatch then position the spring and the over-arm on the inspection hatch.

b. Install the retaining bolt together with a new locknut to secure the over-arm, spring and hatch together.

c. Position the inspection hatch and over-arm assembly on the access cover, align the hinge bolt holes, then install the hinge bolt and a new locknut.

d. Position the locking lever on the access cover, then install then hinge bolt with a new locknut.

e. Position a new gasket on the pressure and vacuum vent flange on the access cover and then install the pressure and vacuum cover.

f. Install the four nuts and washers and tighten them securely.

g. Install a new combing seal around the outer flange of the access cover.

115. Installation. Install the access cover in accordance with EMEI Vehicle G 743.

Hydraulic Pump

WARNING

Before removing the hydraulic pump, ensure that the hydraulic fluid is sufficiently cool to avoid burns.

116. Removal. Remove the hydraulic pump in accordance with EMEI Vehicle G 743.

117. Disassembly. Disassemble the hydraulic pump as follows:

a. Match mark the front and rear covers to the body of the pump, then remove the nine nuts and washers which secure the front cover, body and rear cover together.

b. Remove the front cover then remove the two seals and the circlip from the cover (Figure 39) and discard both seals.

c. Remove and discard the front gasket and thrust plate.

d. Remove the drive gear and idler gear.

e. Remove and discard the rear thrust plate then slide the body away from the rear cover.

f. Remove and discard the back-up seal, balance seal and rear gasket.

g. If necessary, the dowels may be driven out of the front and rear covers and the studs removed from the body and rear cover.

h. Using a bush puller, remove the two bushes from the front cover then remove the two bushes from the rear cover.

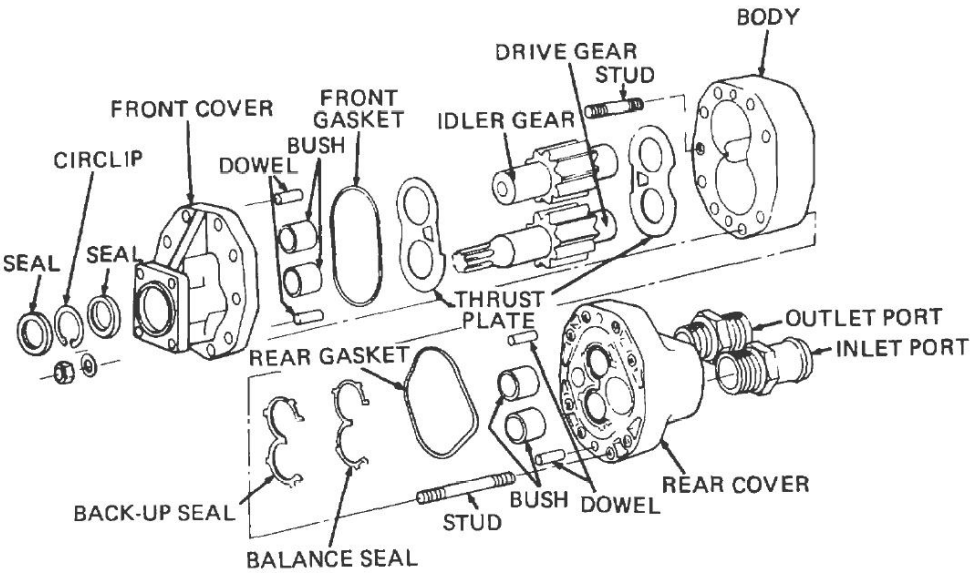

Figure 39 Hydraulic Pump – Exploded View

118. Cleaning and Inspection. Clean and inspect the hydraulic pump as follows:

a. Clean all components, ensuring that no gasket residue is left on the front cover, body or rear cover.

b. Check the sealing surfaces of the front cover, body and rear cover for nicks, burrs and scoring and replace them as necessary.

c. Check the bushes for nicks, burrs and scoring as well as elongation and replace them as necessary.

d. Check the gear teeth and shaft of the idler gear for damage or signs of excessive wear and replace them if necessary.

e. Check the gear teeth, shaft and splines of the drive gear for damage or signs of excessive wear and replace them if necessary.

f. Check the inlet and outlet port connectors for fractures or damage and replace them as necessary.

g. Check the studs and dowels for damage or signs of excessive wear and replace them as necessary.

119. Assembly. Assemble the hydraulic pump as follows:

NOTE

Always use new seals and gaskets during reassembly

a. Lubricate the four bushes with hydraulic fluid (OM-65) then press two bushes into the housings in the rear cover and two into the housings in the front cover using an adapter and press.

b. Install any dowels removed during the disassembly procedure.

c. Install any studs removed during the disassembly procedure, ensuring that the single short stud is installed into the pump body, while the eight long studs are installed into the rear cover.

d. Install the rear gasket, balance seal and back-up seal respectively in the grooves provided in the rear cover.

e. Slide the body over the studs and onto the rear cover.

f. Install the new rear thrust plate into the body so that the bronze face is toward the gears.

NOTE

Ensure the window in the rear thrust plate is positioned correctly (Figure 39).

g. Lubricate the idler gear and drive gear with OM-65 then install the gears in their respective bushes in the rear cover (Figure 39).

h. Lubricate the sealing surfaces of the two seals then install the seals and circlip into the front cover.

i. Fit the front gasket into the groove in the front cover.

j. Install the new front thrust plate into the front cover so that the bronze face is toward the gears.

NOTE

Ensure the window in the front thrust plate is positioned correctly (Figure 39).

k. Fit the front cover assembly to the body and rear cover assembly, carefully aligning the two gears with their mounting bushes and the securing studs with the mounting holes in the front cover.

l. Fit the nine washers and nuts to the studs, and torque them to 55 to 65 N.m (40 to 50 lbf.ft).

120. Installation. Install the hydraulic pump in accordance with EMEI Vehicle G 743.

121. Testing. Test the hydraulic pump as follows:

a. Install a 70 000 kPa (10 000 psi) pressure gauge and a 90 L/min. (20 gal/min.) flow meter in series with the hydraulic line between the hydraulic pump and the relief valve and interface assembly and tighten all connections.

b. Start the truck engine and set the engine speed to 1 000 rpm then engage the PTO.

c. Operate the pump for approximately ten minutes and check that during this period the pressure indicated does not exceed a maximum pressure of 19 000 kPa (2 760 psi) and the flow rate is approximately 51 L/min. (11.2 gal/min.).

d. Check for any leaks around the pump and rectify them as necessary.

e. Release the throttle, disengage the PTO and shut down the engine.

WARNING

Before disconnecting the pressure and flow rate meters, ensure that the hydraulic fluid is sufficiently cool to avoid burns.

f. Remove the hydraulic line input from the test meters then remove the meters.

g. Connect the hydraulic line and tighten it securely.

h. Check for leaks and rectify them as necessary.

i. Check the fluid level in the oil reservoir, if necessary, top up with OM-65.

Hydraulic Motor

122. Removal. Remove the hydraulic motor as follows:

NOTE

To remove the hydraulic motor, it is necessary to first remove the fuel pump and dual pressure relief valve, complete with the inlet/outlet plumbing (Para 23).

a. Clean the hydraulic motor and hose connections then blow them dry with compressed air.

b. Close the gate valve at the oil reservoir outlet then slacken the hose connection at the filter.

c. Place a receptacle beneath the hydraulic motor, then remove the case drain hose and the elbow from the end of the motor and insert plastic plugs into the hose and the port in the motor.

d. Tag the pump pressure supply and return hoses to ensure correct location at reassembly.

e. Remove the retaining bolts securing the flanges of the pressure supply and return hoses to the pump (Figure 40), discard the O rings then plug the hoses and the ports in the motor with plastic plugs.

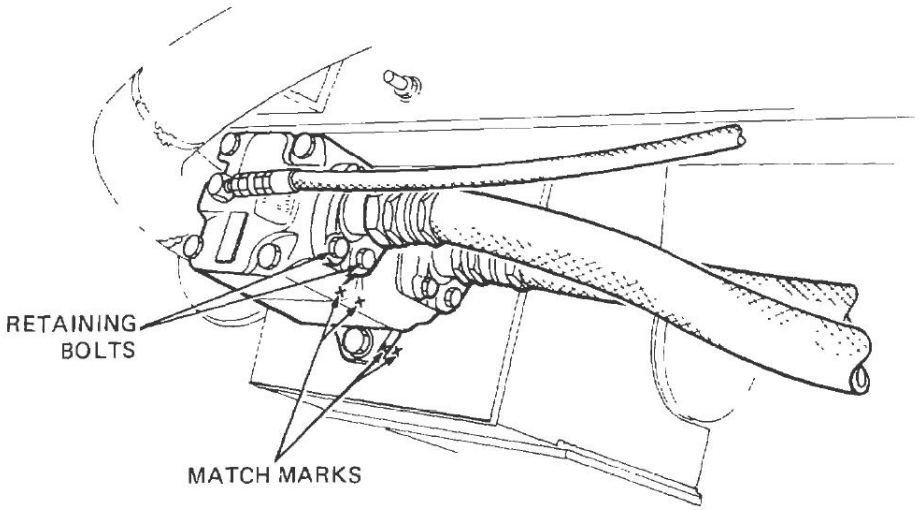

Figure 40 Hydraulic Motor

f. Match mark the two halves of the motor and the motor flange to the mounting bracket (Figure 40).

g. Slacken the two grub screws securing the Fenner coupling to the drive shaft on the motor using an Allen key.

h. Remove the coupling then remove the Woodruff key from the shaft.

i. Suitably support the motor and remove the two bolts securing the motor to the mounting bracket.

j. Remove the motor from the mounting bracket to a clean working area.

123. Disassembly. Disassemble the hydraulic motor as follows:

NOTE

Because the pressure plates, bush, rotor, vanes, ring and adapter come as a complete assembly (cartridge kit) only, the motor should not be disassembled beyond the replacement of the cartridge, adapter, shaft, seal or bearing (Figure 41).

a. Remove the four bolts securing the two halves of the motor together.

b. Separate the cover from the body and discard the back-up ring and the O ring.

c. Remove the cartridge assembly from the body.

d. Remove the hub adapter from the body and discard the O rings and back-up rings.

e. Remove the lock ring and withdraw the shaft from the body.

f. Remove the washer then press the seal and wiper from the body and discard the seal and wiper.

g. Remove the snap ring then press the bearing from the shaft.

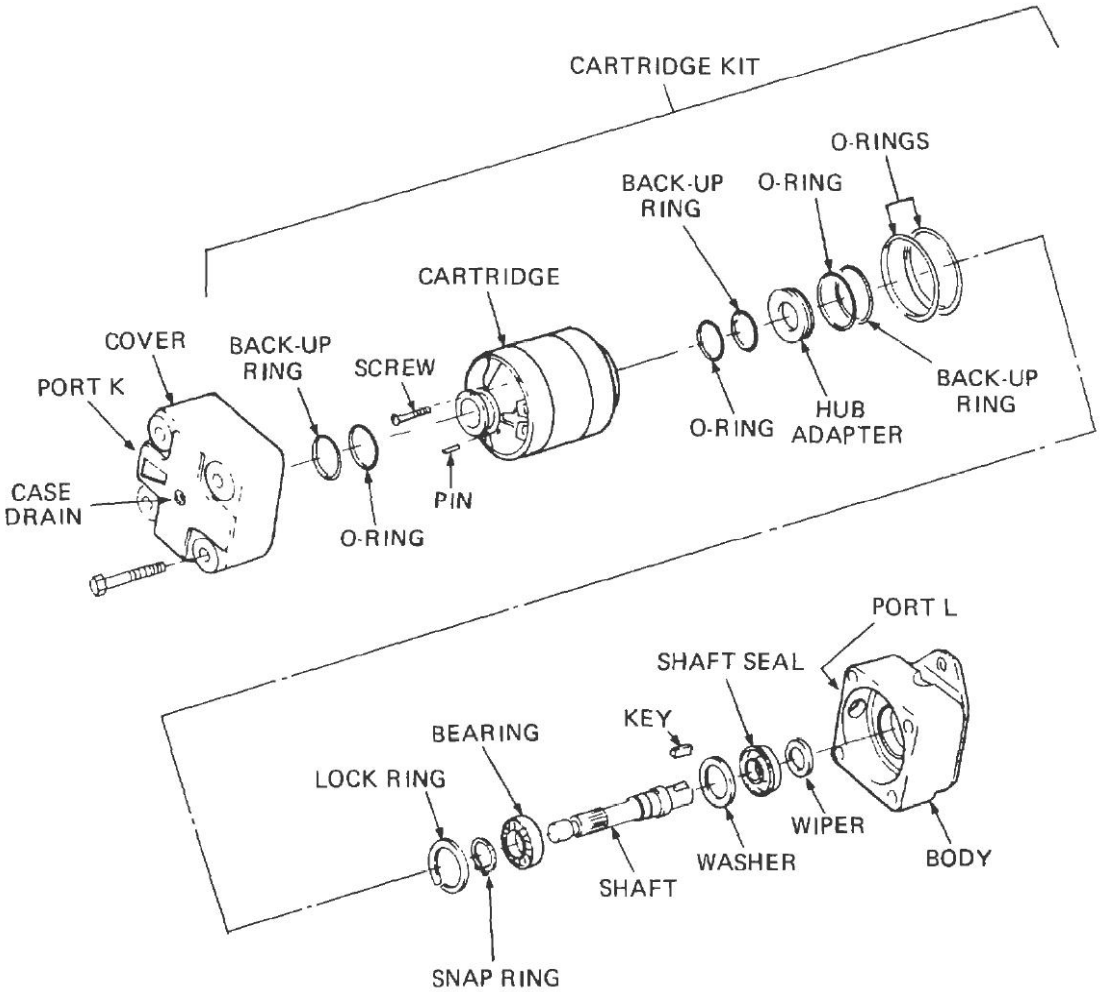

Figure 41 Hydraulic Motor – Exploded View

124. Cleaning and Inspection. Clean and inspect the hydraulic motor as follows:

CAUTION

Do not spin the bearing with compressed air as damage to the bearing may result.

a. Clean the bearing and blow it dry with compressed air.

b. Inspect the bearing for pitting or damage and replace as necessary.

c. Clean the cover, body and shaft then blow them dry with compressed air.

d. Inspect the body and cover for wear or damage or erosion in or around the ports, check the shaft for bend, twist, wear or damage and replace parts as necessary.

e. Check the bush and the splines within the cartridge for wear or damage and replace the cartridge as necessary.

f. Check the condition of the two cartridge locating pins in the cover and ensure that they fit neatly into the cover without excessive side play. If necessary replace the pins and/or the cover.

125. Assembly. Assemble the hydraulic motor as follows:

a. Install a new wiper and shaft seal into the body, ensuring that the sealing lip of the seal is facing toward the inside of the motor.

b. Press the bearing onto the shaft until it butts against the shoulder then install the snap ring.

c. Smear the sealing lip of the seal and the seal running surface on the shaft with clean OM-65 then install the shaft into the body.

d. Install the lock ring into the body to secure the shaft in place.

e. Install a new O ring and back-up ring onto the hub of the rear pressure plate then smear them with clean OM-65.

f. Install a new O ring and back-up onto the hub adapter.

g. Install the hub adapter over the O ring and back-up ring on the hub of the rear pressure plate.

h. Install a new O ring and back-up ring onto the hub of the front pressure plate.

i. Ensure that the two locating pins are correctly installed in the cover.

j. Immerse the cartridge assembly in clean OM-65 for several minutes to ensure it is completely lubricated internally.

k. Remove the cartridge from the fluid and position it over the shaft and into the body, ensuring that the hub adapter is correctly seated in the body.

l. Install new O rings into the body and cover mating surfaces.

m. Position the cover over the cartridge (aligning the locating pins) and push the cover against the mating surface of the body.

n. Align the match marks on the cover and body then install the four bolts and torque them to 130 to 145 N.m (95 to 105 lbf.ft).

o. Plug the ports in the motor with plastic plugs to prevent the ingress of dust or dirt into the motor during installation.

126. Installation. Install the hydraulic motor as follows:

a. Position the motor in the mounting bracket, aligning the match mark on the flange with that on the bracket.

b. Install the two retaining bolts and torque them to 95 to 105 N.m (69 to 76 lbf.ft).

c. Ensure that the pressure supply and return hose connections are clean then remove the plugs from the hoses and ports.

d. Install new O rings and reconnect the hoses to the motor.

e. Torque the retaining bolts to 55 to 60 N.m (40 to 44 lbf.ft).

f. Ensure the case drain hose connection is clean then apply thread sealing tape to the external threads on the elbow.

g. Remove the plug from the motor cover and install the elbow.

h. Remove the plug from the hose, reconnect the hose and tighten the connection securely.

i. Insert the Woodruff key into the drive shaft then slide the Fenner coupling into position.

j. Tighten the grub screws with an Allen key to lock the coupling onto the shaft.

k. Install the fuel pump and dual pressure relief valve, complete with inlet/outlet plumbing in accordance with Para 27.

l. Remove and discard the oil filter.

m. Fill a new oil filter with clean, fresh OM-65 and install the filter on the filter housing.

n. Tighten the hose connection at the filter.

o. Open the gate valve at the oil reservoir outlet then check that there is sufficient fuel in the tank to operate the pump.

p. Start the engine, engage the PTO and operate the fuel pump to ensure that the hydraulic motor is functioning correctly and to bleed air from the hydraulic system.

q. Switch off the pump, disengage the PTO and shut down the engine.

r. Check for leaks and rectify them as necessary.

s. Check the hydraulic fluid level in the oil reservoir, if necessary, top up with OM-65.

Oil Reservoir

127. Removal. Remove the oil reservoir as follows:

a. Close the gate valve at the base of the reservoir.

b. Clean the hose connections and the area around the hose connections on the hydraulic pump then blow them dry with compressed air.

WARNING

Before removing the hydraulic hose to drain the reservoir, ensure that the hydraulic fluid is sufficiently cool to avoid burns.

c. Position a receptacle (81 litres minimum) beneath the hydraulic pump (PTO mounted).

d. Disconnect the hydraulic fluid supply hose at the pump, plug the port in the pump with a plastic plug, then direct the hose into the receptacle.

e. Open the gate valve at the base of the reservoir to allow the hydraulic fluid to drain into the receptacle.

f. Once the fluid has drained from the reservoir, remove the plug from the pump, then reconnect the supply hose to the inlet port of the pump and tighten the screw clamp securely.

g. Remove the receptacle and dispose of the contents in accordance with local waste disposal instructions.

h. Disconnect the hydraulic pump supply hose at the gate valve and plug the hose with a plastic plug.

i. Disconnect and plug the hydraulic fluid return hoses at the oil filter and at the base of the reservoir.

j. Remove the nuts and washers from the end of the reservoir securing straps and remove the straps.

k. Remove the bolt, nut and washer from the bracket at the base of the reservoir on the right-hand side of the truck (Figure 42).

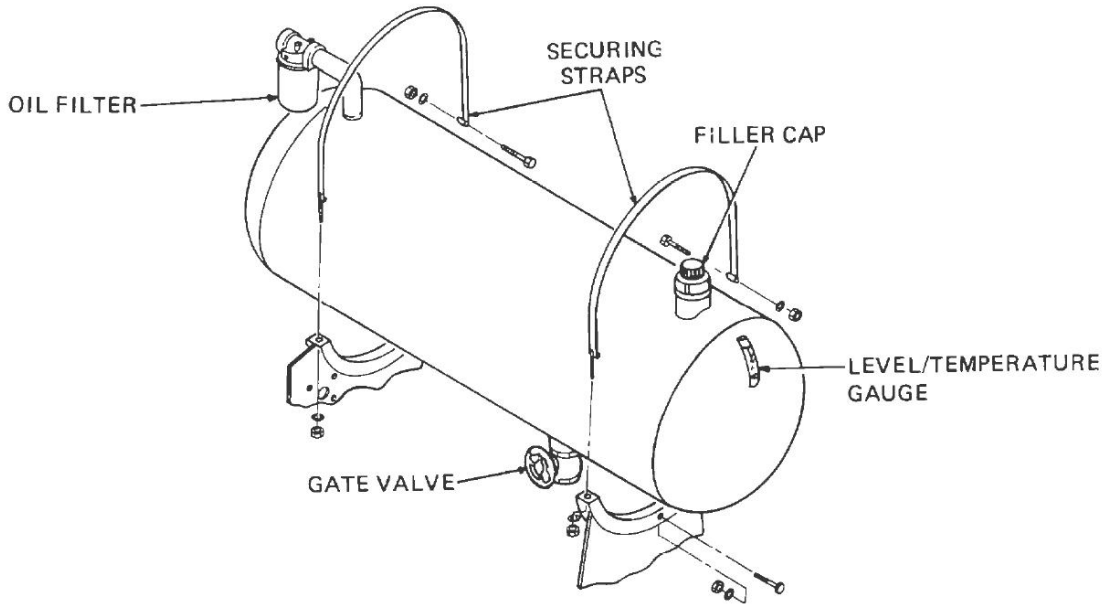

Figure 42 Hydraulic Oil Reservoir

l. Position overhead lifting equipment above the reservoir, secure slings around the reservoir and to the lifting equipment, then lift the reservoir up and clear of the truck.

m. Place the reservoir on stands and remove the slings and lifting equipment.

128. Disassembly. Disassemble the oil reservoir as follows:

a. Remove and discard the oil filter then unscrew the oil filter adapter (Figure 42).

b. Remove the large screw cap, together with the filler cap and strainer assembly from the top of the reservoir.

c. Remove the filler cap from the large screw cap, then remove the six screws and withdraw the strainer from the large screw cap and discard the gasket (Figure 43).

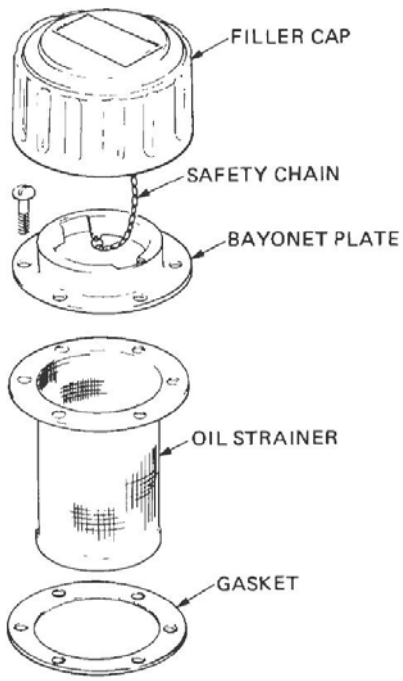

Figure 43 Filler Cap and Strainer Assembly

d. Remove the suction filter element from inside the reservoir and discard the element.

e. Remove the gate valve and the drain plug (if fitted) from the base of the reservoir.

f. Remove the cover from the level/ temperature gauge, unscrew the bolts and remove the gauge.

129. Cleaning and Inspection. Clean and inspect the oil reservoir as follows:

a. Clean the oil reservoir with a cleaning agent then flush out the reservoir with clean, fresh OM-65, to remove any contaminants in the reservoir.

b. Plug all reservoir openings with plastic plugs until ready for installation.

c. Inspect the reservoir for cracks and fractures particularly around the inlet and outlet ports and repair them as necessary.

d. Clean then inspect the filler cap and strainer assembly, the filter adapter and the gate valve for wear or damage and replace them as necessary.

e. Check the condition of the level/temperature gauge and replace it as necessary.

130. Assembly. Assemble the oil reservoir as follows:

a. Position the level/temperature gauge on the reservoir, install and tighten the two retaining bolts, then install the cover.

b. Install a new suction filter element into the reservoir then assemble the filler cap and strainer assembly, together with a new gasket, into the large screw cap.

c. Install the six screws and tighten them securely, then screw the assembly into the reservoir.

d. Apply thread sealing tape to the thread on the fluid return port at the top of the reservoir then install the oil filter adapter and elbow.

e. Ensure that the filter adapter extends past the end of the reservoir and is parallel to the central line of the reservoir.

f. Apply thread sealing tape to the thread of the reservoir outlet port, then install the gate valve and tighten it securely.

g. If previously removed, install and tighten the drain plug.

131. Installation. Install the oil reservoir as follows:

a. Before installing the reservoir, check the condition of the packing strips on the mounting bracket and replace the packing as necessary.

b. Position the overhead lifting equipment over the reservoir and install the slings.

c. Lift the reservoir into position on the truck, ensuring that it is correctly orientated then remove the slings and the lifting equipment.

d. Install the retaining bolt, nut and washer into the bracket at the base of the reservoir and torque it to 20 to 23 N.m (15 to 17 lbf.ft).

e. Position the straps over the reservoir, then install the retaining nuts and tighten them securely.

f. Remove the plugs from the gate valve and the pump supply hose, then connect the supply hose to the gate valve and tighten the clamp securely.

g. Remove the plugs from the fluid return hoses, the reservoir and the oil filter adapter.

h. Reconnect the hoses to their correct positions and tighten them securely.

i. Fill a new oil filter with clean, fresh OM-65 and install the filter on the filter adapter.

j. Tighten the filter two-thirds of a turn by hand after the sealing gasket contacts the adapter.

k. Fill the reservoir with approximately 81 litres of clean, fresh OM-65.

l. Open the gate valve at the base of the reservoir, then start the engine, engage the PTO and operate the hydraulic pump to bleed air from the system.

m. Check for oil leaks at the reservoir fittings and rectify them as necessary.

n. Disengage the PTO and shut down the engine.

o. Check the fluid level in the oil reservoir, if necessary, top up with OM-65.

Air Operated Directional Control Valve

132. Removal. Remove the air operated directional control valve as follows:

WARNING

Before disconnecting the hydraulic hoses from the directional control valve, ensure that the hydraulic fluid is sufficiently cool to avoid burns.

a. Clean the directional control valve and the air line and hydraulic hose connections with a cleaning agent, then blow them dry with compressed air.

b. Tag and disconnect the air lines from the back of the valve (Figure 44).

c. Tag and disconnect and plug the hydraulic hoses.

d. Remove the four nuts, bolts and washers securing the valve assembly to the mounting bracket and remove the valve assembly.

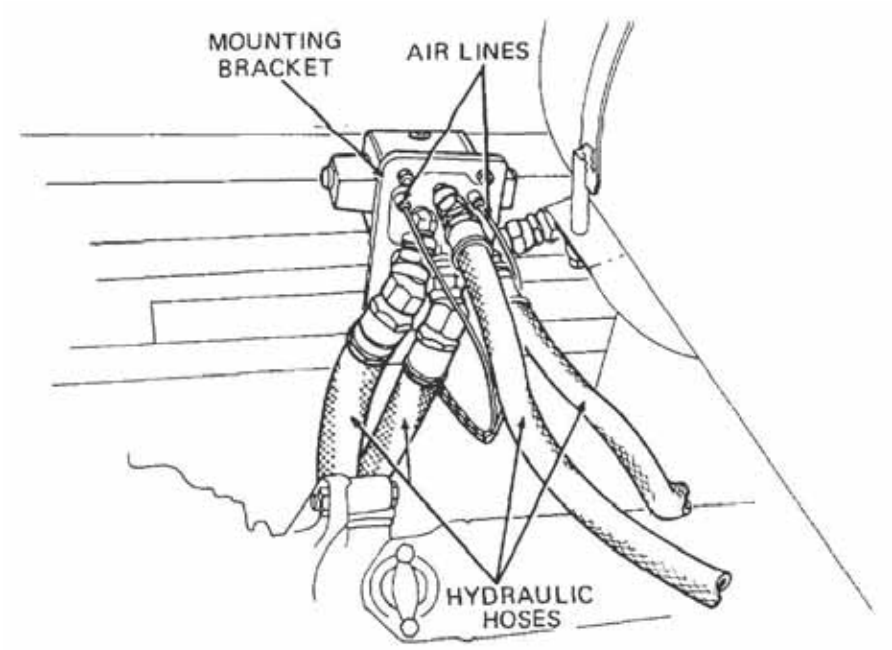

Figure 44 Air Operated Directional Control Valve

133. Disassembly. Disassemble the air operated directional control valve as follows:

a. Remove the screws securing the identification plate to the valve body then remove the identification plate and gasket and discard the gasket (Figure 45).

b. Match mark the sub-plate to the valve body.

c. Remove the four socket head screws securing the sub-plate to the valve body, remove the sub-plate and discard the O rings.

d. Remove the screws securing the end covers to the valve body, remove the end covers and gaskets and discard the gaskets.

e. Remove the pistons and plungers from the end covers and discard the O rings.

f. Remove the retaining ring guide, O rings, washer, spacer, spring and washers from each end of the valve body, then remove the spool and push pin assembly.

g. Remove the push pins from the spool and discard the retaining rings and the O rings.

h. Using an Allen key, remove the plug from the valve body.

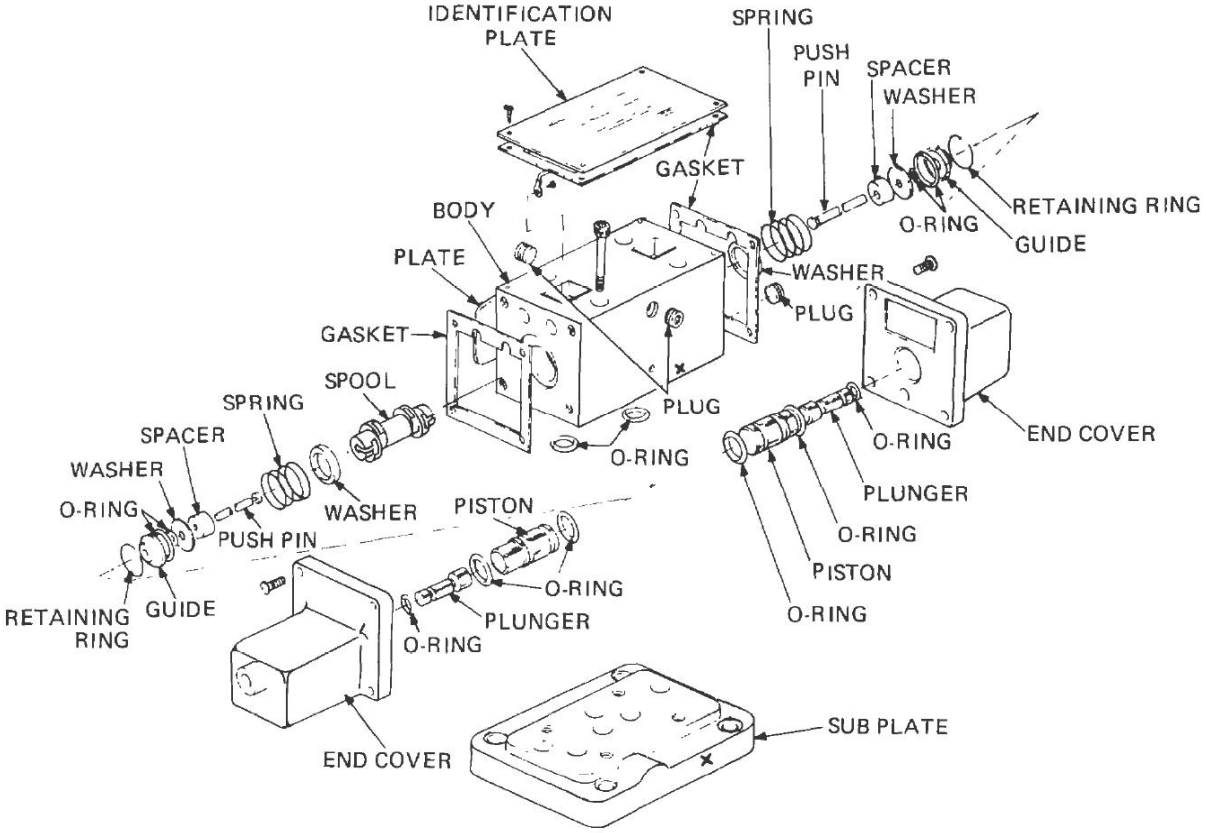

Figure 45 Air Operated Directional Control Valve – Exploded View

134. Cleaning and Inspection. Clean and inspect the air operated directional control valve as follows:

a. Clean all parts and blow them dry with clean, moisture-free air.

b. Inspect the spool and the bore of the valve body for scoring or wear.

c. Insert the spool into the bore of the valve body and check the side clearance, if excessive, replace the spool and the valve body.

d. Check the end covers, pistons and plungers for damage, wear or scoring and replace parts as necessary.

e. Check the sub-plate for damage, if necessary remove the hydraulic hose connections and replace the sub-plate.

f. Check the condition of the springs, push pins and push pin guides and replace worn or damaged parts as necessary.

135. Assembly. Assemble the air operated directional control valve as follows:

a. Assemble the push pins and the spool.

b. Lubricate the spool and push pin assembly and the bore of the valve body with clean OM-65.

c. Insert the spool and push pin assembly into the bore of the valve body.

d. Into each end of the valve body insert the washer, spring, spacer, washer, new O rings (small and large) and the push pin guide.

e. Install new retaining rings into the groove at each end of the valve body.

f. Install new O rings onto the plungers and pistons.

g. Smear the plungers, pistons, O rings and the bore of the end covers with rubber grease then insert the plungers and pistons into the bores of the end covers.

h. Position a new gasket and an end cover on one end of the valve body, then install and tighten the retaining screws. Repeat this procedure for the other end of the valve body.

i. Position the new O rings in the recesses in the valve body sub-plate mounting face, then position the sub-plate on the valve body, ensuring that the match marks are aligned.

j. Install and tighten the four socket head screws.

k. Position the identification plate, together with a new gasket on the valve body, then install and tighten the retaining screws.

l. Install the plugs into the valve body and tighten them securely.

136. Installation. Install the air operated directional control valve as follows:

a. Position the valve assembly on the mounting bracket with the air line ports located towards the top.

b. Install the bolts, nuts and washers and tighten them securely.

c. Ensure that the hydraulic hose connections are clean, then remove the plastic plugs and reconnect the hydraulic hoses to their correct positions and tighten the hose connections securely.

d. Reconnect the air lines to the valve assembly and tighten the connections securely.

e. Start the truck engine, engage the PTO and check that the fuel pump operates in both directions (i.e. load and discharge).

f. Shut down the controls, disengage the PTO and shut down the engine.

Relief Valve and Interface Assembly

137. Removal. Remove the relief valve and interface assembly as follows:

WARNING

Before removing the relief valve and interface assembly, ensure that the hydraulic fluid is sufficiently cool to avoid burns.

a. Clean the valve assembly, hose connections and the area around the valve assembly then blow them dry with compressed air (Figure 46).

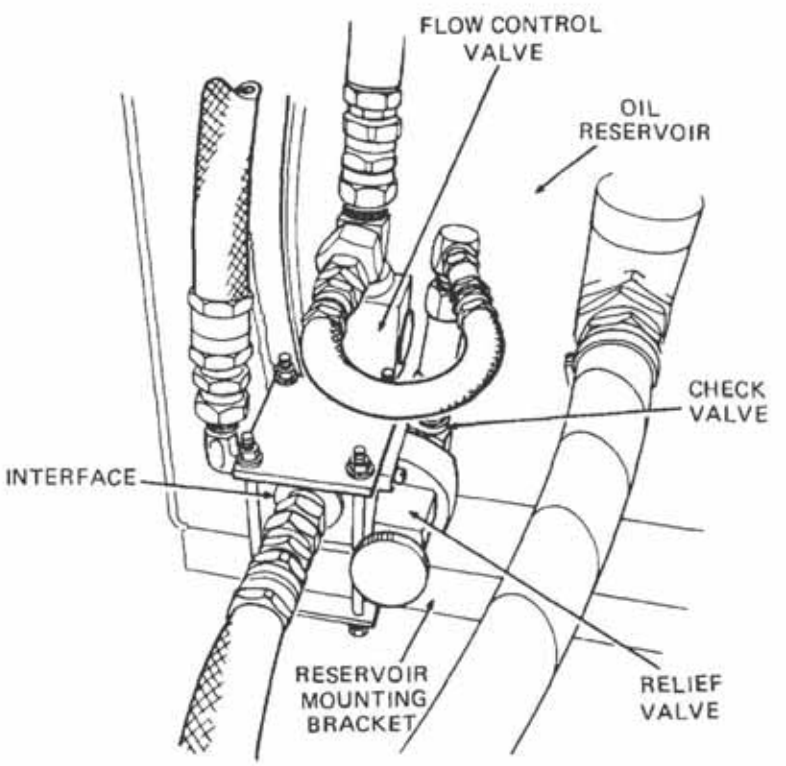

Figure 46 Relief Valve and Interface Assembly

b. Crack loose the pressure hoses at the valve assembly to allow any residual fluid (which may be under pressure) to drain off.

c. Disconnect and plug the hoses with plastic strips.

d. Support the valve assembly then remove the nuts and washers from the clamping bracket that secures the valve assembly to the reservoir mounting bracket.

e. Remove the clamping bracket and the valve assembly, complete with check valve and flow control valve, from the truck.

f. Remove the check valve, flow control valve, hose connection and elbows from the relief valve and interface assembly.

NOTE

The check valve and flow control valve are non-repairable and are serviced by replacement.

138. Disassembly. Disassemble the relief valve and interface assembly as follows:

a. Match mark the relief valve and interface to ensure correct positioning at reassembly.

b. Remove the four socket head bolts from the relief valve and separate the relief valve from the interface (Figure 47).

c. Slacken the locknut at the adjusting screw on the relief valve then remove the adjusting screw and locknut by turning the knurled knob in a counterclockwise direction. Note the number of turns taken to remove the adjusting screw to use when calibrating at installation.

d. Remove the retainer then remove the washers and shim, the plunger, spacer, spring and poppet from the valve body.

e. Remove the connector and seat from the other end of the valve body (It will be necessary to use a hammer and soft drift to remove the seat).

f. Remove the spring, the piston and the seat from the interface (Use a hammer and soft drift to remove the piston seat).

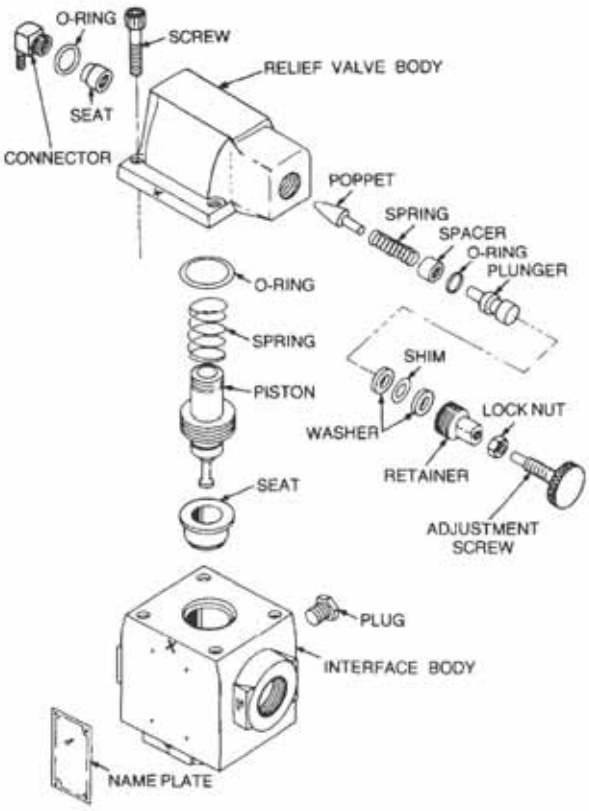

Figure 47 Relief Valve and Interface Assembly – Exploded View

139. Cleaning and Inspection. Clean and inspect the relief valve and interface assembly as follows:

a. Clean all parts and blow them dry with clean, moisture-free air.

b. Discard all O rings.

c. Check that the piston fits snugly into both the interface housing and the relief valve housing with no significant side movement.

NOTE

Excessive side movement or clearance will allow pressurized fluid to flow past the piston and back to the reservoir, by-passing the orifice and poppet valve and rendering the pressure relief valve system inoperative.

d. Examine the fluid passages for signs of erosion and replace parts as necessary.

e. Check the piston and the poppet springs for wear or damage and replace them as necessary.

f. Inspect the piston and seat and the poppet seat for wear or damage and replace parts as necessary.

140. Assembly. Assemble the relief valve and interface assembly as follows:

a. Install the valve and piston seats using a hammer and soft drift.

b. Ensure that the seat butts firmly against the shoulders and that the orifice in the poppet valve seat faces away from the piston bore.

NOTE

If the poppet valve seat is not installed in this position, a whistling noise will be emitted when the valve is operating.

c. After installing the valve and piston seats, flush the housing out with clean OM-65.

d. Lubricate the piston and the piston bore in the interface housing with clean OM-65 then assemble the piston and spring into the housing.

e. Install the poppet, spring, spacer, plunger washers and shim into the valve body.

f. Coat the retainer threads with OM-65 then install and tighten the retainer.

g. Apply OM-65 to the threads of the adjusting screw then install the adjusting screw together with the locknut into the relief valve.

h. Screw the adjusting screw into the housing by turning the knurled knob in the clockwise direction, the same number of turns noted when removing the adjusting screw.

i. Position a new O ring in the recess in the interface then position the relief valve on the interface, aligning the match marks.

j. Install and torque the retaining bolts to 12.6 N.m (9 lbf.ft.).

k. Install the check valve connector into the relief valve and tighten it securely.

l. Install the hose connectors and elbows to their original positions on the valve assembly and tighten them securely.

m. Ensure that the check valve is installed with the arrow (indicating the direction of free flow) pointing away from the relief valve.

n. Install the flow control valve to the relief valve and interface assembly and tighten them securely.

141. Installation and Calibration. Install and calibrate the relief valve and interface assembly as follows:

a. Place the relief valve assembly in its normal position on the truck.

b. Install the clamping bracket over the interface and the reservoir mounting bracket.

c. Install and tighten the nuts and washers to secure the valve assembly to the mounting bracket.

d. Apply thread sealing tape to the external threads of the hose connectors, then remove the plug from each hose and its corresponding valve connector in turn and reconnect the bases to the valve assembly, except for the check valve hose.

e. Install an 8 000 kPa (1 160 psi) pressure gauge to the elbow on the check valve then connect the check valve hose to the gauge (Figure 48).

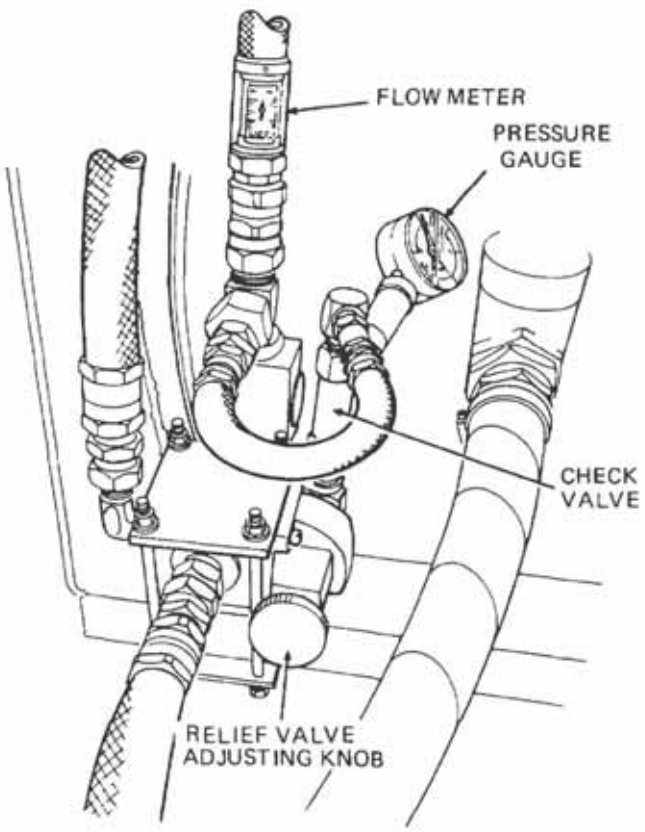

Figure 48 Installation of Pressure Gauge and Flow Meter

f. Install a flow meter in the hydraulic circuit between the hydraulic motor and the flow control valve (Figure 48).

g. Check the level of hydraulic fluid in the oil reservoir, if necessary, top up with OM-65.

h. Position a strobe tachometer (or equivalent) over the fuel pump drive shaft and Fenner coupling to monitor the fuel pump rpm.

i. Connect a fuel supply source to the fuel pump, open the appropriate valves then start the truck engine and engage the PTO.

j. Using the hand throttle and the tachometer, set the engine speed to 900 rpm.

k. Operate the pump control lever then turn the knurled knob on the relief valve to obtain a pump speed of 800 rpm ± 16 rpm.

l. To set the relief valve opening pressure, slowly close the flow control valve, using a spanner, to simulate a pump stall situation and raise the pressure within the relief valve.

m. If necessary, adjust the relief valve adjusting screw at the knurled knob to raise the pressure to 10 345 to 10 690 kPa (1 500 to 1 550psi).

NOTE

When the pressure within the relief valve reached, the poppet within the relief valve opens, causing the interface piston valve to open and allow fluid to vent to the oil reservoir.

n. Open the flow control valve to allow the relief and interface valves to reset then slowly close the flow control valve while watching the pressure gauge.

o. When the indicated pressure reaches 10 345 to 10 690 kPa (1 500 to 1 550 psi), the pressure should drop suddenly as the relief and interface valves open, if not, re-adjust the relief valve.

p. Once the relief valve is set, adjust the flow control valve to obtain a pump speed of 800 rpm ± 16 rpm.

NOTE

The fluid flow should be 45.5 L/min (10 gal/min).

q. Increase the engine speed to 2 000 rpm (using the hand throttle) and check that the pump speed does not increase above 1 100 rpm, if it does, close the flow control valve to reduce the pump speed to 1 100 rpm.

r. Reduce the engine speed to 900 rpm and re-check the pump rpm, if necessary, re-adjust the relief valve to obtain the correct pump rpm.

s. Place the pump control lever in neutral, disengage the PTO and shut down the engine.

t. Close off the valves which were opened for the calibration procedure and disconnect the fuel supply source.

WARNING

Before removing the pressure gauge and the flow meter, ensure that the hydraulic fluid is sufficiently cool to avoid burns.

u. Crack loose the pressure hose connection at the pressure gauge and flow meter to allow any residual fluid (which may be under pressure) to drain off.

v. Remove both the pressure gauge and the flow meter from the relief valve assembly.

w. Reconnect the hydraulic hose to the interface.

x. Tighten the hose connection securely.

FAULT FINDING

142. System fault finding for the Truck, Tank, Fuel, Heavy, MC3 – Mack is contained in Tables 3, 4 and 5.

Table 3 Fault Finding – Hydraulic System

Symptom	Probable Cause	Action
No fluid flow – no pressure	PTO is not engaging.	Repair it.
	PTO to the pump splined connection is damaged.	Repair or replace the pump and/ or the PTO as necessary.
	Relief valve is incorrectly adjusted.	Adjust the relief valve to the correct setting.
	Check valve is jammed open.	Replace it.
	Balance hole (orifice) in the interface piston is plugged.	Remove the piston and clean it out. If necessary drain the system, replace the filter and refill it with clean OM-65.
	Poppet in the relief valve is not seating.	Back off the adjusting knob several turns while running the pump to dislodge any foreign matter which may be caught on the seat. Check the condition of the seat, spring and poppet if malfunctioning still persists.
Erratic fluid pressure	Foreign matter in the system.	Drain, flush and refill the system with clean OM-65. Replace the filter.
	Worn poppet and seat in the relief valve.	Replace the poppet and seat and check the calibration.
	Piston sticking in the interface or the relief valve housing.	Remove and clean the piston. Remove burrs by light lapping. Check the freedom of movement on reassembly. Replace it if necessary.
	Interface or relief valve is damaged or operating incorrectly.	Repair and calibrate it.
Excessive noise or chatter	Distorted relief valve spring	Replace the spring.
	Worn poppet or seat in the relief valve.	Replace worn parts.
	Relief valve setting is too close to system operating pressure.	Calibrate the relief valve pressure.
Fluid overheated	System pressure is too high.	Calibrate the flow control and relief valve setting.

Table 4 Fault Finding – Fuel System

Symptom	Probable Cause	Action
No fuel output	Defective fuel pump.	Repair it.
	Defective hydraulic system.	Repair it.
Tank will not load (bottom fill with pump)	Defective fuel pump.	Repair it.
	Defective hydraulic system.	Repair it.

Table 5 Fault Finding – Air System

Symptom	Probable Cause	Action
Control button(s) will not stay on	Defective control button valve.	Repair it.
Level sensor fails to shut off loading operation	Defective control button valve.	Repair it.
No fuel pump directional control	Defective air operated directional control valve.	Repair it.

END

Distribution List: **Vehicle G 54.0 – Code 4** (Maint Level)
(Sponsor: LV SPO, Mdm/Hvy B Vehicles)
(Authority: TRAMM)