TRUCK, FUEL TANKER, HEAVY, MC3 – MACK

FUEL TANK

TECHNICAL DESCRIPTION

This instruction is authorised for use by command of the Chief of Army. It provides direction, mandatory controls and procedures for the operation, maintenance and support of equipment. Personnel are to carry out any action required by this instruction in accordance with EMEI General A 001.

TABLE OF CONTENTS

Page No

Introduction 3
Associated Publications 3
Item Identification Locations 3
General Information 4
Arrangement of the Equipment 4
Tank 6
PTO 7
Hydraulic Pump 7
Hydraulic Motor 7
Fuel Pump and Dual Pressure Relief Valve 7
Oil Reservoir 7
Control Box 7
Hydraulic Circuit Control Valves 8
Fuel Circuit Control Valves 9
Air Circuit Control Valves 10
ENGINE EMERGENCY SHUT DOWN SYSTEMS 11
MK1 Original build State 11
Emergency Shutdown 12
MK1 Upgrade to the Safety Systems 12
Rollover Sensor 13
Battery Isolation Switch 13
Earth Lead and Spike 13
Hose Reels 13
Hose Reel Isolation Valves 14
Hose Stowage Tubes 14
Work Lamps 14
Fire Extinguishers 14
General Circuit Description 14
TRAM Safety System (if Fitted) 17
TRAM Interlock (if Fitted) 17
Detailed Technical Description 18
Tank 18
PTO 18
Hydraulic Pump 18
Hydraulic Motor 19
Fenner Coupling 19
Fuel Pump and Dual Pressure Relief Valve 20
Hydraulic Circuit Control Valves 22
Hydraulic Circuit 24
Fuel Circuit Control Valves 28
Hose Nozzles 32
Pressure and Vacuum Vent 33
Scully Overfill Detection Socket 34
Scully Optical Probe 35
Fuel Circuit 35
Bottom-loading Procedures 37
Bottom-loading using the Tanker's Pump 38
Bottom-loading using an External Pump and Scully Overfill Detection Socket 38
Bottom-loading using an External Pump without Scully Overfill Detection Socket 38
Air Circuit Control Valves 38
Air Circuit 49
Emergency Shutdown 52
TRAM Safety System (if Fitted) 53
TRAM Interlock (if Fitted) 55

LIST OF FIGURES

Page No

Figure 1 Fuel Tanker – LH View 4
Figure 2 Fuel Tanker – RH View 5
Figure 3 Tank – Plan View 6
Figure 4 Access Cover, Level Sensor, Scully Optical Probe and Vapour Transfer Vent 7
Figure 5 Control Box – Compartment Valves and Pump Control 8
Figure 6 Scully Overfill Detection Socket 9
Figure 7 Outlet Gate 10
Figure 8 Shuttle Valve Assembly 11
Figure 9 Junction Box Assembly 11
Figure 10 Original Build - Emergency Shutdown 12
Figure 11 Engine Strangler 12
Figure 12 Rollover Sensor 13
Figure 13 Earth Lead and Spike 13
Figure 14 Hose Reel 14
Figure 15 LHF Valve Fitted 14
Figure 16 Simplified Fuel Tanker Circuits 16
Figure 17 TRAM Installation 17
Figure 18 Tram Interlock Roller Valve 17
Figure 19 Hydraulic Pump – Exploded View 18
Figure 20 Hydraulic Motor – Exploded View 19
Figure 21 Fenner Coupling – Exploded View 20

Figure 22 Fuel Pump – Exploded View 20
Figure 23 Rotor and Vane Configuration 21
Figure 24 Dual Pressure Relief Valve – Exploded View 21
Figure 25 Dual Pressure Relief Valve – Operation 22
Figure 26 Relief Valve and Interface Assembly 22
Figure 27 Flow Control Valve – Exploded View 23
Figure 28 Check Valve – Exploded View 23
Figure 29 Air Operated Directional Control Valve – Exploded View 24
Figure 30 Fluid Flow – Fuel Pump Disengaged 25
Figure 31 Fluid Flow – Fuel Pump Engaged 26
Figure 32 Fluid Flow – Increased Line Pressure (Stalled Motor or Pump) 27
Figure 33 Tank Foot Valve – Exploded View 28
Figure 34 Tank Outlet Valve – Exploded View 29
Figure 35 Fuel Pump Inlet/Outlet Valve – Exploded View 30
Figure 36 Vacuum Break Valve – Exploded View 31
Figure 37 Non-return Valve – Exploded View 31
Figure 38 Hose Nozzle – Exploded View 32
Figure 39 Pressure and Vacuum Vent – Normal Operation 33
Figure 40 Pressure and Vacuum Vent – Pressure Operation 33
Figure 41 Pressure and Vacuum Vent – Vacuum Operation 34
Figure 42 Pressure and Vacuum Vent – Roll Over Situation 34
Figure 43 Scully Overfill Detection Socket – Exploded View 35
Figure 44 Scully Optical Probe – Exploded View 36
Figure 45 Fuel Circuit – Using Tanker's Pump 37
Figure 46 Fuel Circuit – Using Scully Overfill Detection Socket 39
Figure 47 Control Button Valve – Exploded View 40
Figure 48 Air Distribution – All Control Valves Off 41
Figure 49 Air Distribution – Emergency Valve On 41
Figure 50 Air Distribution – Emergency and Load Valves On 42
Figure 51 Air Distribution – Loading Compartment No 1 42
Figure 52 Poppet Valve – Exploded View 43
Figure 53 Flow Control Valve – Exploded View 44
Figure 54 Pump Control Valve – Exploded View 45
Figure 55 Shuttle Valve – Exploded View 45
Figure 56 Vapour Transfer Vent – Exploded View 46
Figure 57 Non-return Valve – Exploded View 46
Figure 58 Level Sensor Valve – Exploded View 47
Figure 59 Inversion Valve – Exploded View 48
Figure 60 Shuttle Valve Assembly 48
Figure 61 Loading Compartment No 1 without Scully Overfill Detection Socket 50
Figure 62 Loading Compartment No 1 using Scully Overfill Detection Socket 51
Figure 63 Air Circuit – Discharging Compartment No 3 52
Figure 64 TRAM General Arrangements 53
Figure 65 Tram Components 54
Figure 66 Tram Trolley 55
Figure 67 Tram Interlock Wiring Diagram 56

LIST OF TABLES

Page No

Table 1 Item Identification Locations 3

INTRODUCTION

1. This EMEI contains a Technical Description of the fuel tank fitted to the Truck, Fuel Tanker, Heavy, MC3 - Mack. For further information on the cab/chassis or repair and servicing information of the cab/chassis, refer to EMEI Vehicle G 70 decade.

Associated Publications

2. Reference may be necessary to the latest issue of the following documents:

a. Complete Equipment Schedule (CES) 11665 – Truck, Fuel Tanker, Heavy, MC3 – Mack;

b. EMEI Vehicle G 70 Decade – Truck, Cargo, Heavy, MC3 – Mack;

c. EMEI Vehicle G 740 – Truck, Fuel Tanker, Heavy, MC3 – Mack – Data Summary;

d. EMEI Vehicle G 743 – Truck, Fuel Tanker, Heavy, MC3 – Mack – Light Grade Repair;

e. EMEI Vehicle G 744 – Truck, Fuel Tanker, Heavy, MC3 – Mack – Medium and Heavy Grade Repair;

f. EMEI Vehicle G 747-2 – Additional Front Mudflaps;

g. EMEI Vehicle G 747-3 – Passengers Grab Handle;

h. EMEI Vehicle G 747-4 – Fitting of Class 3 Flammable Liquid Sign;

i. EMEI Vehicle G 747-6 – Replacement Cabin Map Light;

j. EMEI Vehicle G 747-7 – Hose Reel Isolation Valves;

k. EMEI Vehicle G 747-8 – Stainless Steel Low-Point Drains;

l. EMEI Vehicle G 747-9 – Non-Slip Ladder Rungs and Tread Plates;

m. EMEI Vehicle G 747-14 – Installation and Removal of Self Protection System – Vehicle Interface Kit on Valir Hardened Cab Variant;

n. EMEI Vehicle G 747-15 – Fitting of a Walkway Fall Restraint System;

o. EMEI Vehicle G 747-17 – Installation and Removal of Force Protection Counter Measures System Vehicle Installation Kit Upgrade on Valir Hardened Cab Variant; and

p. EMEI Vehicle K 016-1 – Total Restraint Access Module (TRAM) Safety System Technical Manual.

Item Identification Locations

3. The item identification locations are described in Table 1.

Table 1 Item Identification Locations

Serial	Item	Location
1	Chassis number	Right-hand rear frame, above intermediate axle
2	Chassis nameplate	Left-hand door inside cab
3	Engine number	Right-hand top of timing gear housing
4	Front axle number	Left rear of axle housing
5	Transmission number	Left-hand side
6	Transfer case	Right-hand rear
7	Intermediate axle number	Right-hand front of carrier housing
8	Rear axle number	Right-hand front of carrier housing
9	Injection pump identification	Side of the pump
10	Power take-off (PTO)	Right-hand side
11	Hydraulic pump	Lower side of pump
12	Fuel tank	Left-hand forward area

GENERAL INFORMATION

Arrangement of the Equipment

4. The fuel tanker utilises an aluminium three-compartment storage tank for the transportation of bulk fuel. Figures 1, 2 and 3 illustrate the location of the various sub-assemblies and components that make up the fuel tank equipment.

5. Viewed from the left-hand side of the tanker (Figure 1) the following sub-assemblies and components can be identified:

- **a.** the tank;
- **b.** the hydraulic motor (behind the fuel pump);
- **c.** the fuel pump and relief valve;
- **d.** the control box;
- **e.** the directional control valve (air operated);
- **f.** the oil reservoir;
- **g.** the two hose reels;
- **h.** the various tank outlet and sampling valves;
- **i.** the emergency shutdown switch;
- **j.** the dry chemical fire extinguishers;
- **k.** the two hose stowage tubes;
- **l.** the left-hand work lamp;
- **m.** the hose reel lock;
- **n.** the nozzle retainer;
- **o.** the hose nozzle;
- **p.** the air open-able adapter;
- **q.** the two toolboxes (front and rear);
- **r.** the oil filter;
- **s.** the control box;
- **t.** the outlet valve; and
- **u.** the Scully overfill detection socket.

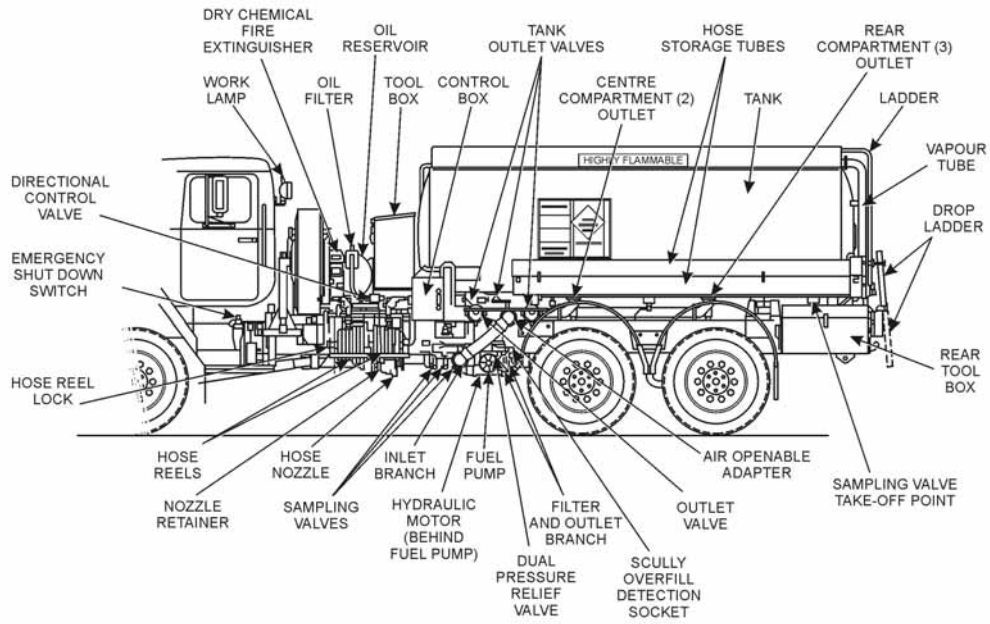

Figure 1 Fuel Tanker – LH View

6. Figures 1 and 2 also illustrate the ladder and drop ladder fitted to the rear of the tanker to provide access to the tank walkway. A vapour tube is also fitted to the rear for tank venting purposes.

7. Viewed from the right-hand side of the tanker (Figure 2) the following sub-assemblies and components can be identified:

- **a.** the PTO;
- **b.** the hydraulic pump;
- **c.** the battery isolation switch;
- **d.** the earth lead and earth spike;
- **e.** the two hose reels;
- **f.** the centre compartment sampling valve take-off point;
- **g.** the oil reservoir;
- **h.** the nozzle retainer;
- **i.** the reel crank handle;
- **j.** the hose nozzle;
- **k.** the hose reel lock;
- **l.** the tank rear mounting;
- **m.** the three hose stowage tubes; and
- **n.** the right-hand work lamp.

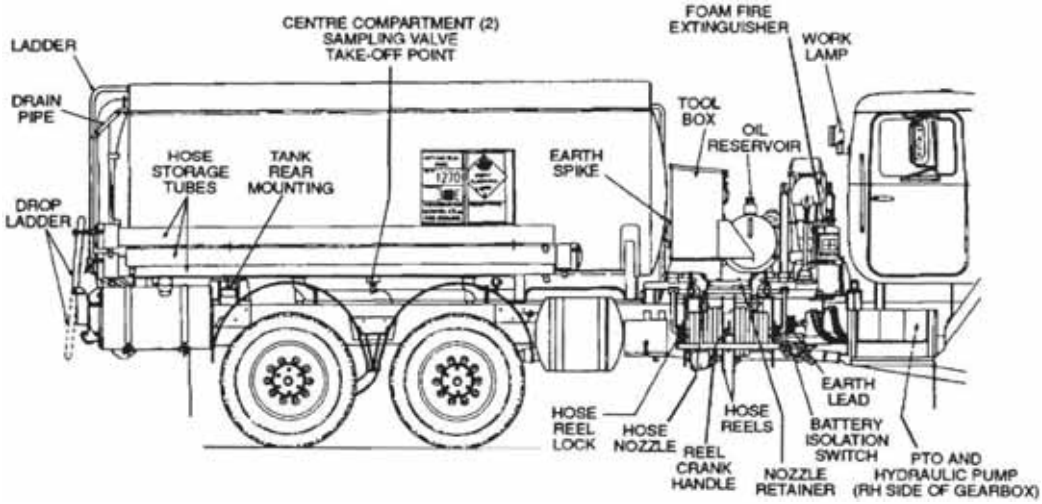

Figure 2 Fuel Tanker – RH View

8. The plan view of the tank (Figure 3) illustrates the layout of the tank walkway, which includes the following:

- **a.** the three access covers, each fitted with a fill hatch, a dip hatch, an inspection hatch and a pressure and vacuum vent;
- **b.** the manhole cover;
- **c.** the three level sensors;
- **d.** the vapour transfer vent;
- **e.** the earth point;
- **f.** the two lifting eyes;
- **g.** the work lamp;
- **h.** the drain pipe;
- **i.** the vapour tube;
- **j.** the roll over combing;
- **k.** the junction box; and
- **l.** the Scully optical probe.

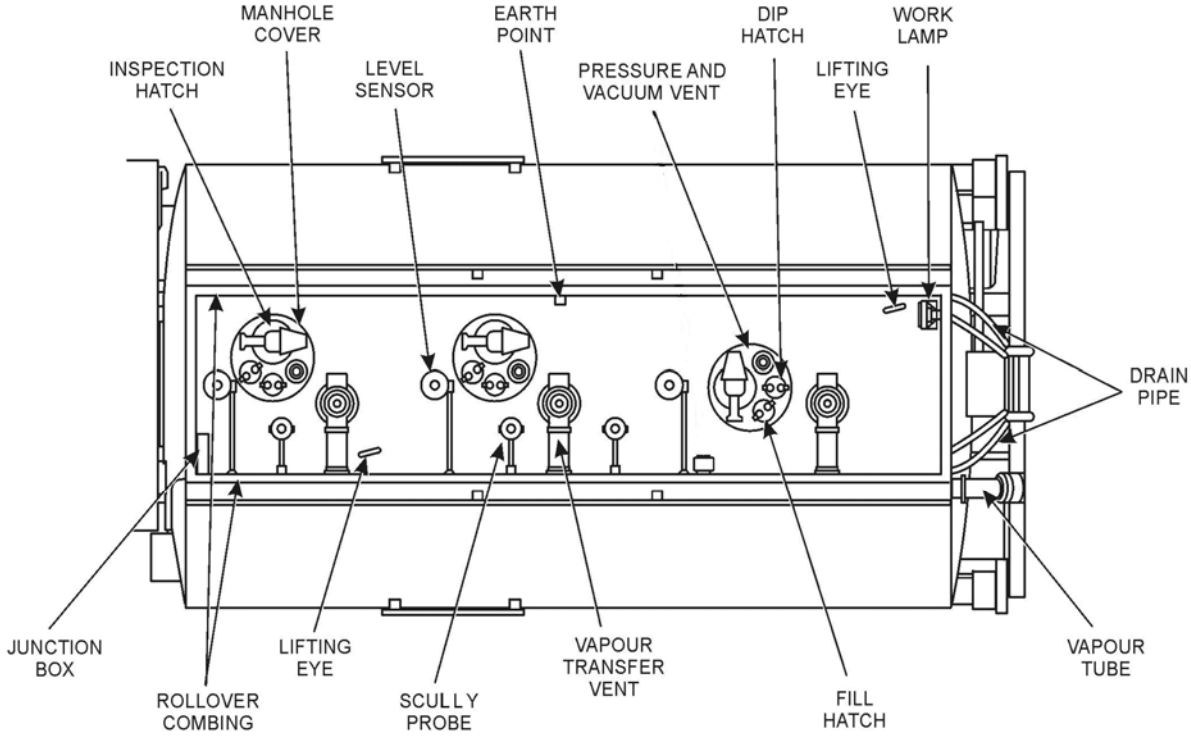

Figure 3 Tank – Plan View

Tank

9. Each of the three compartments within the tank is completely self-contained and is calibrated individually. The maximum safe fill level for each compartment is indicated on that compartment's dipstick (Figure 4). The tank approximate capacity is as follows:

a. the front compartment – 2 860 litres;

b. the centre compartment – 3 580 litres;

c. the rear compartment – 4 940 litres; and

d. the design limit loading (all compartments full) – 11 380 litres.

NOTE

Dipsticks of individual tanks are not to be used in other compartments or tanks.

10. Each compartment may be top-filled by an external pressure source or filling arm, bottom-filled by an external pressure source or by using the integral fuel pump. The access hole at the top of each compartment facilitates top-filling as well as providing access for internal tank inspection. An earth point is provided on top of the tank for use during top-filling.

11. Incorporated in each compartment access cover is an inspection hatch (also used for top-filling with a filling arm), a dip hatch for level checking, a fill hatch for top-filling by an external pressure source and a pressure and vacuum vent for tank pressure and vacuum protection (Figure 4).

12. Each compartment utilises a level sensor, a Scully optical probe and a vapour transfer vent (Figure 4). The level sensor, which operates only during bottom-filling, automatically shuts off the corresponding tank foot valve when a compartment teaches its safe fill level. The Scully optical probe monitors each compartment and loading is automatically stopped when the safe fill level is reached. The vapour transfer vent ensures that the tank compartment is ventilated during the loading and discharge operations.

13. The walkway on the top of the tank (which is coated in a non-slip surface) is drained by two pipes, one in each rear corner and connected into the hollow ladder rails. A roll over combing completely surrounds the walkway to provide protection for the tank top fittings in the event of the fuel tanker overturning.

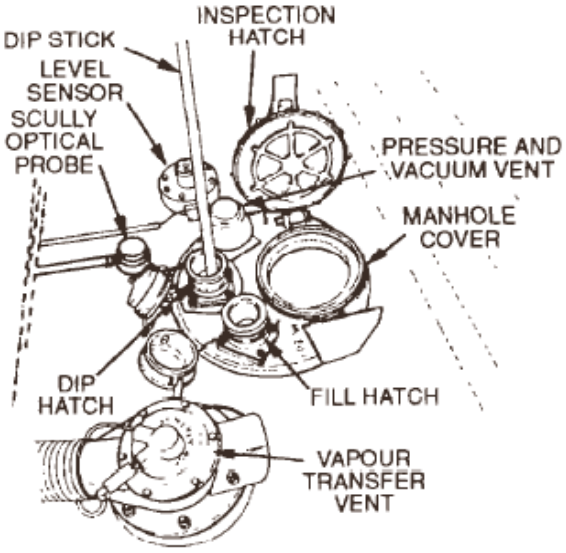

Figure 4 Access Cover, Level Sensor, Scully Optical Probe and Vapour Transfer Vent

PTO

14. The PTO is a Powauto AH225BRll gear-driven single speed model, mounted on the right-hand side of the truck gearbox. The PTO drives the hydraulic pump, when it's actuated by the dash mounted ON/OFF control.

Hydraulic Pump

15. A Powauto CFS15 hydraulic pump is flange mounted directly onto the drive-end of the PTO. The pump is a two gear; constant displacement design which draws hydraulic fluid from the oil reservoir and it provides the pressurised hydraulic fluid to drive the hydraulic motor.

Hydraulic Motor

16. The hydraulic motor is a Vickers 26M fixed displacement vane type, which provides drive for the fuel pump. The hydraulic motor is installed on the same mounting bracket as the fuel pump. Drive for the motor is provided by the hydraulic pump via the hydraulic hoses.

Fuel Pump and Dual Pressure Relief Valve

17. An Alfons Haar FP80–1135 fuel pump is fitted to the left-hand side of the truck, just below the tank outlets. The purpose of the fuel pump is to pump fuel either into or from the tank compartments as required. The pump drive is provided by the hydraulic motor via a Fenner coupling.

18. A dual pressure relief valve is mounted on the top of the fuel pump. Any build-up in pressure in the pump outlet line is dumped back through the valve to the inlet side of the pump, thereby reducing the outlet pressure.

Oil Reservoir

19. The oil reservoir is mounted on a support frame, which is bolted to the hose reel mounting brackets on each side of the truck. The reservoir capacity is 81 litres, with a side-mounted gauge to indicate the fluid level and the temperature. The reservoir is also fitted with a drain plug and an outlet (gate) valve. Oil filtering is provided by a cartridge type filter mounted on the oil reservoir.

Control Box

20. The control box (Figure 5) is located on the left-hand side of the truck and houses the controls for the tank loading and discharging operations. The controls operate as follows:

a. **Pump Control Lever.** This lever controls the direction of rotation of the hydraulic motor and, therefore, the fuel pump for loading and discharging fuel.

b. Load and Discharge Button Valves. These valves open the vapour transfer vents in each tank compartment. In addition, operating the discharge button valve inhibits the level sensors during discharging.

c. Flow Controls. Button valves 1, 2 and 3 open the appropriate tank compartment foot valves as well as activating the appropriate level sensor valves. The emergency button E controls the air supply to the overall circuit and can be used to shut down the pumping operations in an emergency.

Figure 5 Control Box – Compartment Valves and Pump Control

Hydraulic Circuit Control Valves

21. Oil Reservoir Outlet Valve. This valve is a hand operated bronze gate type valve, located on the base of the reservoir. The valve permits the flow of hydraulic fluid within the hydraulic circuit and provides a means of preventing fluid loss in the event of a hose failure.

22. Relief Valve and Interface Assembly. The relief valve and interface assembly provides a pressure relief system for the hydraulic circuit in the event of a failure, such as a seized pump or motor.

23. Flow Control Valve. A ball type flow control valve is located in the hydraulic line between the interface and the air operated directional control valve. The valve is adjusted to maintain the hydraulic motor speed between 2 800 to 3 100 rpm (engine speed 1 150 to 2 000 rpm).

24. Check Valve. This valve is incorporated between the relief valve and the flow control valve output to monitor the fluid pressure within the line. The check valve aids the relief valve and interface assembly in directing fluid to the hydraulic motor, via the air operated directional control valve, or dumping it directly to the oil reservoir in the event of increased line pressure.

25. Air Operated Directional Control Valve. This valve controls the direction of rotation of the hydraulic motor. The valve directs the pressurised hydraulic fluid supplied by the PTO hydraulic pump, to one of the two lines connecting the motor and the valve, with the second line acting as the fluid return. The line selection is controlled by air pressure from the pump control valve in the control box. If the NEUTRAL position is selected the pressurised hydraulic fluid is directed back to the oil reservoir.

Fuel Circuit Control Valves

26. Tank Foot Valves. Each tank compartment is fitted with an air operated foot valve in the inlet/outlet line. The valves are used during bottom-loading and discharging operations and are controlled by the compartment controls located in the control box. The system can also be manually overridden in the event of air failure. When the foot valves are open, fuel is available at the tank outlet valves.

27. Tank Outlet Valves (API Valve). Fuel from the tank foot valves flows to the tank outlet valves, which are located on the left-hand side of the truck. The outlet valves are a hand operated, spring-loaded piston valve. The valve can also receive fuel in the closed position for the purpose of purging the lines into the tank.

28. Fuel Pump Inlet/Outlet Valves. The fuel pump inlet branch is fitted with a hand operated butterfly valve. The outlet from the fuel pump is directed to the required tank outlet valve, as well as to the four hose reels. A hand operated butterfly valve is located in the outlet valve, while a non-return valve is installed in the fuel line to the hose reels.

29. Vacuum Break Valve. A ball valve and vacuum break valve are also incorporated after the fuel pump. The vacuum break valve is installed in the fuel pump outlet line on top of a ball type valve. These valves are used to break the vacuum which occurs as the fuel lines are purged of residual fuel on the completion of operations.

30. Non-Return Valve. A non-return valve is incorporated in the fuel line to the hose reels to prevent hydraulic shocks being transmitted back to the fuel pump when the hose nozzles are shut off.

31. Hose Reel Isolation Valves. An isolating ball valve is fitted to each of the four hose reel inlet pipes to provide a means of isolating a faulty hose reel.

32. Sampling Valves. Each tank compartment is fitted with a hand operated ball type sampling valve beneath the tank, which is connected to an identical type of valve located on the left-hand side of the truck. The sampling valves are non-repairable and are serviced by replacement.

33. Pressure and Vacuum Vent. Each access cover is fitted with a pressure and vacuum vent, which protects the tank against excessive pressure or vacuum in normal operation. In the event of the tanker rolling over, steel balls within the vent seal the tank, preventing fuel spillage.

34. Scully Overfill Detection Socket. The Scully overfill detection socket (Figure 6) provides automatic and continuous checking of the compartment fill level. The loading dock's male overfill detection plug must be fitted to the truck's female Scully overfill detection socket before loading can begin. When the compartment's safe fill level is reached product loading is automatically stopped.

Figure 6 Scully Overfill Detection Socket

35. Scully Optical Probes. One Scully optical probe is located in each of the tanker's three compartments and are wired to the Scully overfill detection socket. Each probe is calibrated to the compartment's safe fill level. As the liquid level rises in the compartment during loading, the optical lens on the Scully probe is covered. Light is excluded, activating a signal to the loading dock via the Scully overfill detection socket to stop loading.

Air Circuit Control Valves

36. Hold Back Valve. A hold back valve is incorporated between the secondary air reservoir and the fuel control air circuit to prevent any leakage from the fuel control air circuit draining the secondary air reservoir.

37. Control Button Valves. Six control button valves are located in the control box (Figure 5) and are used for loading and discharging operations.

38. Poppet Valves. Poppet valves are used as a switch, distributing air within the fuel control circuit as directed by the control buttons.

39. Flow Control Valve. The flow control valve remains shut until the air pressure, supplied via the E control button overcomes the internal spring pressure. At this point, the flow control valve opens and supplies air to the pump control valve.

40. Pump Control Valve. Air is supplied to the pump control valve via the flow control valve. If the pump control valve is in either the LOAD or DISCHARGE position, air is directed to the vapour transfer vent on each tank compartment as well as to the air operated directional control valve, which controls the rotation of the hydraulic motor. In the NEUTRAL position, no air flows within the circuit.

41. Air Operated Directional Control Valve. This valve controls the direction of rotation of the hydraulic motor by supplying pressurised hydraulic fluid to the motor as directed by the pump control valve. The pump control valve is connected to the air operated directional control valve by two air lines. In the LOAD and DISCHARGE positions, air pressure is applied to the control valve, moving a spool within the valve in the appropriate direction, thereby controlling the flow of hydraulic fluid to the motor. In the NEUTRAL position, no air pressure is applied to the control valve.

42. Shuttle Valves. Shuttle valves are used to direct air into a common line from either of two lines. In the fuel tank air circuit, shuttle valves are used in the vapour transfer vent lines and the air operated directional control valve lines.

43. Vapour Transfer Vents. Each tank compartment incorporates a vapour transfer vent to ensure proper tank ventilation during both loading and discharging fuel. Each vent is fitted with a non-return valve in the exhaust line.

44. Level Sensor Valves. Each tank compartment incorporates a level sensor to shut off the corresponding tank foot valve when the compartment reaches its safe fill level.

45. Outlet Gate. Before hoses can be connected to the tank outlet valves the outlet gate must be raised (Figure 7). This action depresses the plunger of the roller gate valve and air is directed in sequence to the inversion valve, Clippard valve, shuttle valve assembly, vapour vents and the junction box.

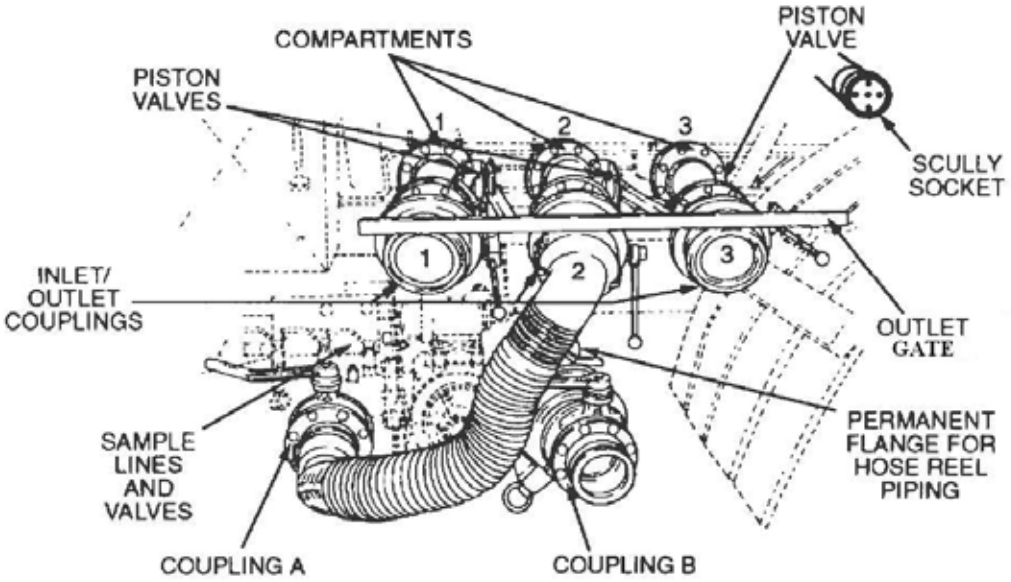

Figure 7 Outlet Gate

46. Inversion Valve. An inversion valve is mounted on the right-hand inner chassis rail behind the second tank saddle support. By directing supply air to the inversion valve, the truck's parking brake is activated (if not already applied).

47. Clippard Valve. The Clippard valve, located inside the Scully truck socket, halts the air flow until the loading dock overfill detection plug is connected to the Scully overfill detection socket. Once connected, the Clippard valve plunger is depressed, the outlet port is opened allowing air to the shuttle valves, the vapour vents and the pilot/spring valves located in the junction box.

48. Shuttle Valve Assembly. Three shuttle valves are mounted on a plate attached to the front tank saddle (Figure 8). Air pressure supplied via either the Clippard valve or the control box is directed to the tank foot valves.

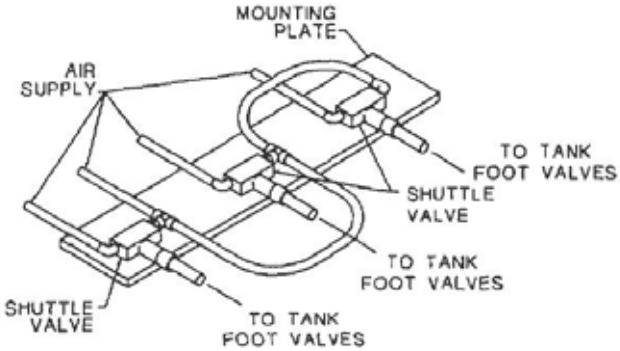

Figure 8 Shuttle Valve Assembly

49. Pilot/Spring Valves. Two pilot/spring valves are fitted inside the junction box assembly (Figure 9) located at the front of the tank walkway. The pilot/spring valves have the following multi purpose functions:

a. they isolate the control panel air system from the Scully air system,

b. they energise the brake switch which activates a signal to the loading dock to commence loading, and

c. they allow air to exhaust once loading is completed.

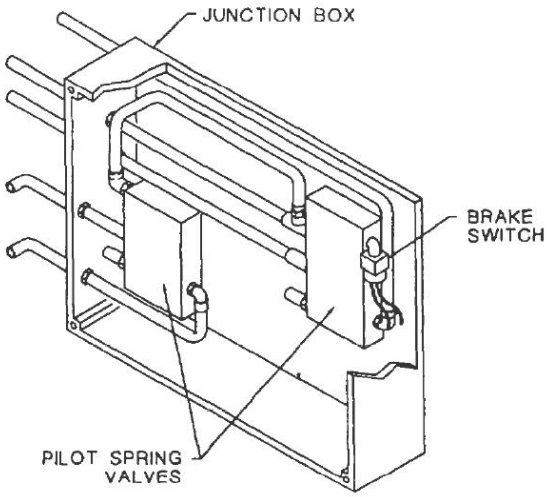

Figure 9 Junction Box Assembly

50. The valves, operated by air pressure, are activated when the Scully overfill detection socket is connected to the loading bay.

ENGINE EMERGENCY SHUT DOWN SYSTEMS

MK1 Original build State

51. The original configuration comprises of a Dynatard Shutdown Switch and an Emergency Engine Shut Down Switch (Figure 10). These two systems do not isolate electrical power to the vehicle.

Emergency Shutdown

52. The fuel tanker is fitted with two engine emergency shutdown systems, the engine strangler and the engine Dynatard shutdown. Both emergency shutdown system switches are located on the left-hand side, beneath the cab door (Figure 10).

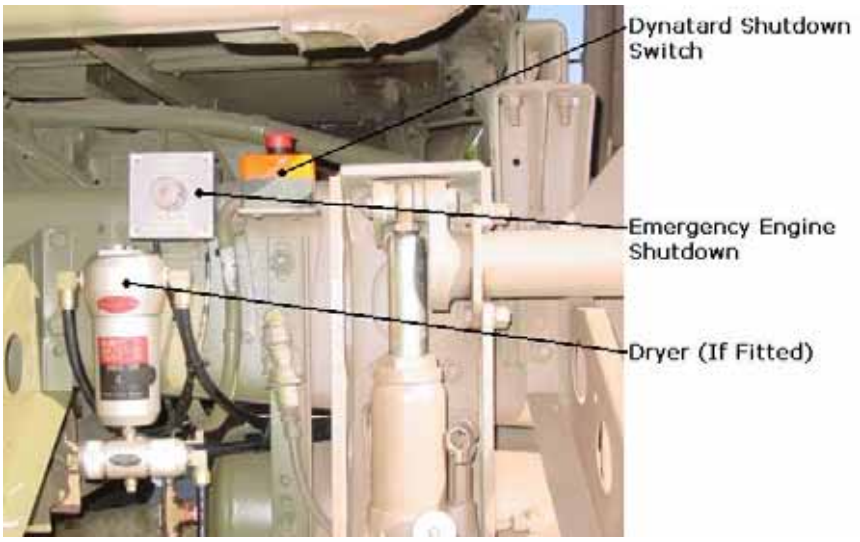

Figure 10 Original Build - Emergency Shutdown

53. Engine Dynatard Shutdown. The engine Dynatard shutdown (Figure 10) is the standby system which can be used in the event of failure in the primary system. This shutdown does not isolate electrical power to the vehicle.

54. Engine Strangler. To comply with safety requirements for BLFT, a pneumatically operated engine strangler has been fitted as shown in Figure 11.

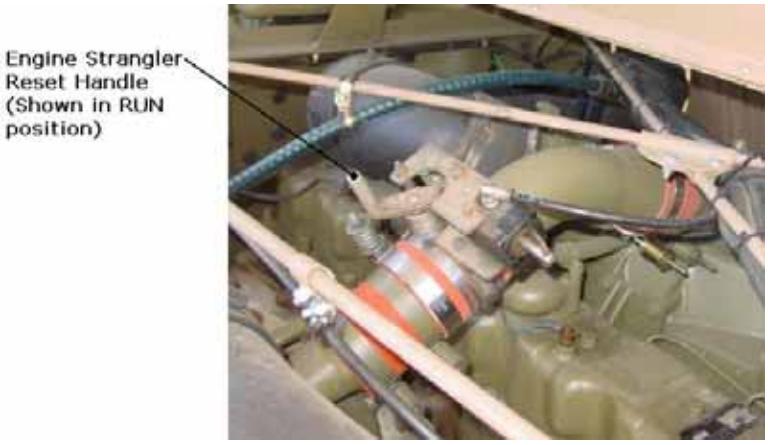

Figure 11 Engine Strangler

MK1 Upgrade to the Safety Systems

55. During the upgrade process the Dynatard shutdown switch is removed and replaced with a Rollover Sensor. The electrical system is also modified; so that if any of the two systems are activated, it will isolate power to the vehicle completely. If this occurs the isolation switch will need to be reset prior to the vehicle being able to be restarted.

NOTE

Once operated, the strangler needs to be reset before the vehicle will start.

Rollover Sensor

56. To comply with safety requirements for Bulk Liquid Fuel Tankers (BLFT) a rollover sensor has been fitted and is located on the chassis under the LHS of the cab (Figure 12). The rollover sensor is only required for new or rebuilt trucks after October 1999. The rollover sensor minimises the risk of electrically ignited fires by activating the battery isolation switch thus isolating the electrical power to the batteries. When tilted past 45º, the rollover sensor trips the battery isolation switch and activates a solenoid in the strangler control box to activate the engine strangler.

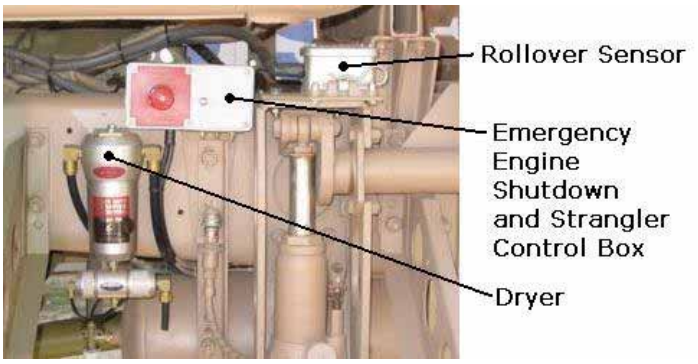

Figure 12 Rollover Sensor

Battery Isolation Switch

57. The battery isolation switch is located on the right-hand side of the fuel tanker, beneath the earth lead. In the OFF position, this switch isolates the fuel tanker electrical system except for the work lamp circuits.

Earth Lead and Spike

58. An earth lead and spike are provided to electrically earth the fuel tanker prior to loading or discharging fuel (Figure 13).

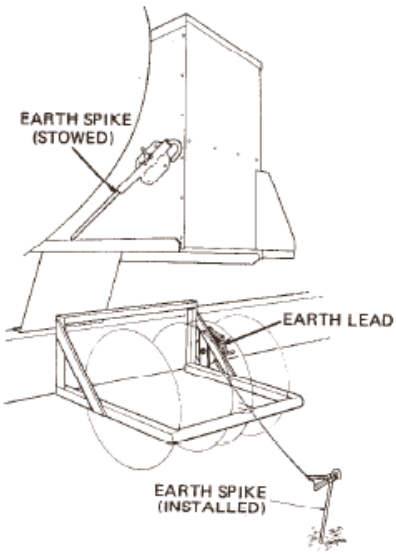

Figure 13 Earth Lead and Spike

Hose Reels

59. The fuel tanker is fitted with four hose reels, two on the left-hand side and two on the right-hand side. Each ree1 is fitted with a 10 metre PVC hose. Each hose is fitted with a nozzle which is held in the nozzle retainer when not in use. A locking device and crank handle is fitted to each hose reel (Figure 14). All plumbing from the fuel pump to the hose reels is manufactured from stainless steel.

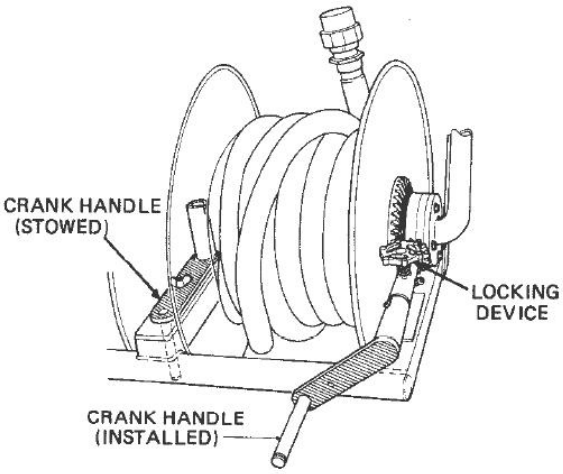

Figure 14 Hose Reel

Hose Reel Isolation Valves

60. The hose reel inlet pipes are fitted with isolation ball valves (Figure 15) which are located on both the left and right front and rear hose reel pipe assemblies (Para 2.j). They are used to isolate a faulty hose reel when required.

Figure 15 LHF Valve Fitted

Hose Stowage Tubes

61. Five hose stowage tubes are fitted to the fuel tanker, two on the left-hand side (Figure 1) and three on the right-hand side (Figure 2) of the tank. Each tube houses a 3 600 mm delivery hose, and is drained by a soft-rubber evacuator valve.

Work Lamps

62. Three work lamps are fitted to the fuel tanker, one on either side of the cab rear, and the third on the top of the fuel tank (Figures 1, 2 and 3). The lamps can be used when the electrics have been isolated.

Fire Extinguishers

63. In addition to the normal cab-mounted fire extinguisher, three other fire extinguishers are provided on the fuel tanker. Two 4.5 kg dry chemical extinguishers are mounted on the left-hand side of the truck (Figure 1). A nine litre foam extinguisher is fitted to the right-hand side of the truck (Figure 2), adjacent to the de-ditching tools.

General Circuit Description

64. The simplified fuel tanker circuit diagram (Figure 16) illustrates the relationships between the air, hydraulic and fuel circuits on the fuel tanker.

65. When the PTO is engaged, it drives the hydraulic pump which draws hydraulic fluid from the oil reservoir. Depending on the position of the pump control lever in the control box, the pressurised hydraulic fluid from the hydraulic pump will take one or two paths as follows:

a. With the pump control lever in NEUTRAL, no air pressure is applied to the air operated directional control valve and the internal spring pressure centres the valve spool. This spool directs all the hydraulic fluid back to the oil reservoir.

b. With the pump control lever in either the LOAD or DISCHARGE position, air pressure is applied to the air operated directional control valve to move the valve spool in the appropriate direction, thereby allowing pressurised hydraulic fluid to flow to the hydraulic motor. The direction of the motor rotation is dependant on the function required (i.e. loading or discharging fuel). Fluid return to the oil reservoir from the motor is via the air operated directional control valve.

66. Drive from the hydraulic motor is coupled to the fuel pump via a Fenner coupling.

67. The fuel pump permits fuel to be pumped from or into the tanker as follows:

a. In the discharge function, fuel is gravity fed through the air operated tank foot valves to the hand operated tank outlet valves. The tank outlet valve allows fuel to flow via a flexible hose into the inlet branch butterfly valve and then into the fuel pump. Fuel is pumped under pressure to the four hose reels, via a non-return valve, and to the outlet branch butterfly valve via a 500 micron filter.

b. In the load function, fuel is drawn in through the outlet branch butterfly valve and filter by the fuel pump. It is then pumped under pressure to the desired tank outlet valve via a flexible hose and one butterfly valve. With the appropriate tank outlet valve and tank foot valve open, fuel is pumped into the tank compartment until the level sensor indicates that the safe fill level has been reached. At this point, the tank foot valve shuts thereby preventing the tank overfilling.

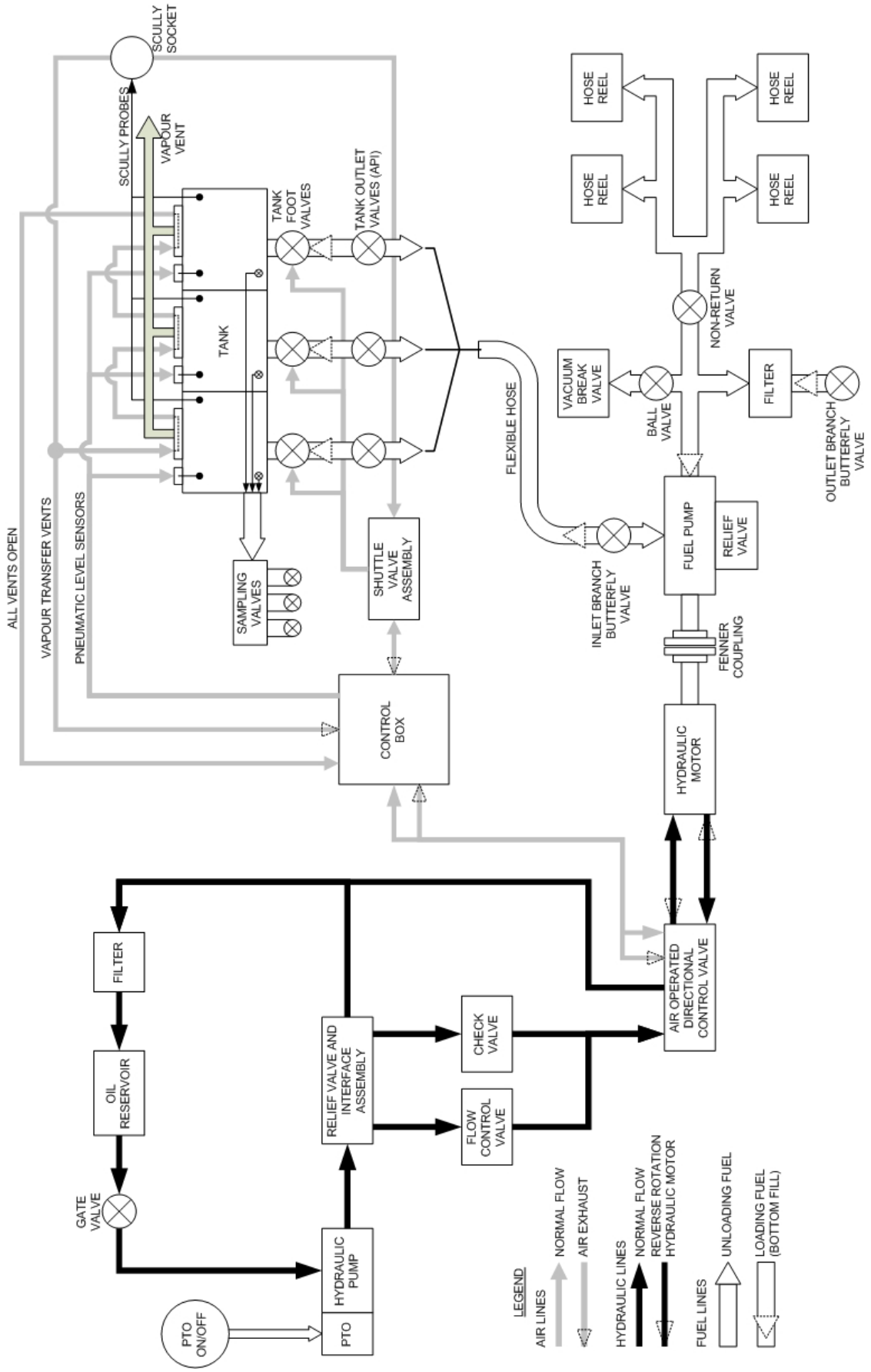

Figure 16 Simplified Fuel Tanker Circuits

TRAM Safety System (if Fitted)

68. The TRAM Safety System is a mobile anchor point that moves along the fixed rail on top of the fuel tank (Figure 17).

Figure 17 TRAM Installation

TRAM Interlock (if Fitted)

69. The TRAM Interlock unit is a pneumatic/electric system (Figures 18 and 67) which activates a light and/or audible alarm (mounted on the dash of the vehicle) to warn the operator that the TRAM Arm is not in the 'lay down' position.

Figure 18 Tram Interlock Roller Valve

DETAILED TECHNICAL DESCRIPTION

Tank

70. The tank, which comprises three individual compartments, is constructed from aluminium alloy. The rear compartment, being the largest of the three, is divided by a central support baffle.

71. Access to the top of the tank is via the rear mounted ladder. Entry to each tank compartment is via the appropriate access cover, utilising the step welded to the internal compartment baffle or bulkhead. Each bulkhead and the centre baffle are fitted with cleaning rings to facilitate the change of product.

72. Incorporated in each compartment access cover is an inspection hatch, a dip hatch, a fill hatch and a pressure and vacuum vent. The dip hatch and the fill hatch each have a 1 800 mm aluminium tube connected between the access cover and a bracket welded to the bottom of the tank. The dip sticks are housed within the dip tubes, while the fill tubes are incorporated to provide an even fuel distribution when utilising an external pressure source for top loading. The pressure and vacuum vents provide tank protection during normal operations.

73. Each compartment is fitted with a vapour transfer vent, which transfers fuel vapours to a channel on the left-hand side of the tank walkway during the loading and discharging operations. This channel, which is fitted with a pressure and vacuum vent, is connected to the vapour tube on the rear of the fuel tanker.

74. Each compartment is fitted with a Scully optical probe which, when connected to the loading bay via the Scully overfill detection socket, monitors the safe fill level of the compartment being bottom loaded. The optical probe provides automatic halting of the product loading when the safe fill level is reached.

PTO

75. The PTO is actuated by compressed air which is controlled by an ON/OFF control located on the truck dashboard. When the switch is placed in the ON position, compressed air is directed to the PTO where it actuates a piston which operates a gear selector fork. This selector fork, in turn, engages the selector gear which transfers the drive from the adapter gear, driven from the truck gearbox, to the PTO driven gear. This gear is splined to the output shaft which transfers the drive to the hydraulic pump. The PTO is lubricated by oil from the truck gearbox.

Hydraulic Pump

76. The hydraulic pump (Figure 19) is flange mounted directly onto the drive output end of the PTO. The pump drive gear is splined to the PTO drive shaft. The drive gear and idler gear shafts are both mounted in bushes. When operating, hydraulic fluid is drawn from the reservoir through the pump inlet port. The rotation of the gears forces the fluid out the outlet port under pressure. The hydraulic fluid also provides lubrication for the working components of the pump.

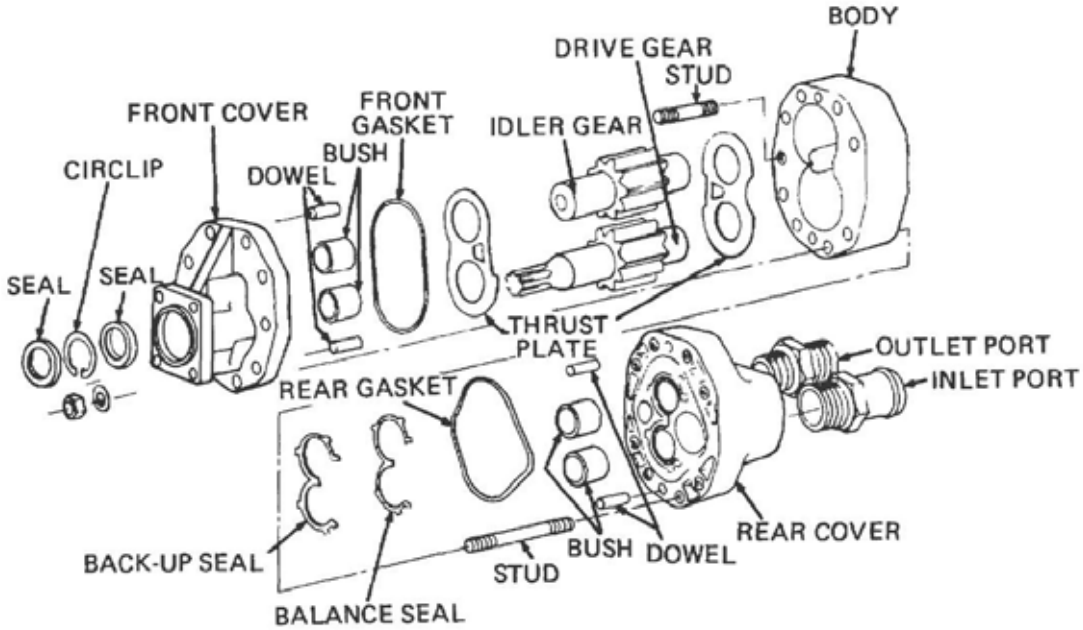

Figure 19 Hydraulic Pump – Exploded View

Hydraulic Motor

77. The hydraulic motor (Figure 20) is capable of intermittent or continuous operation in either direction. The direction of rotation is controlled by applying pressurised hydraulic fluid to the motor ports as follows:

a. Port K – anticlockwise rotation (fuel discharge).

b. Port L – clockwise rotation (fuel loading).

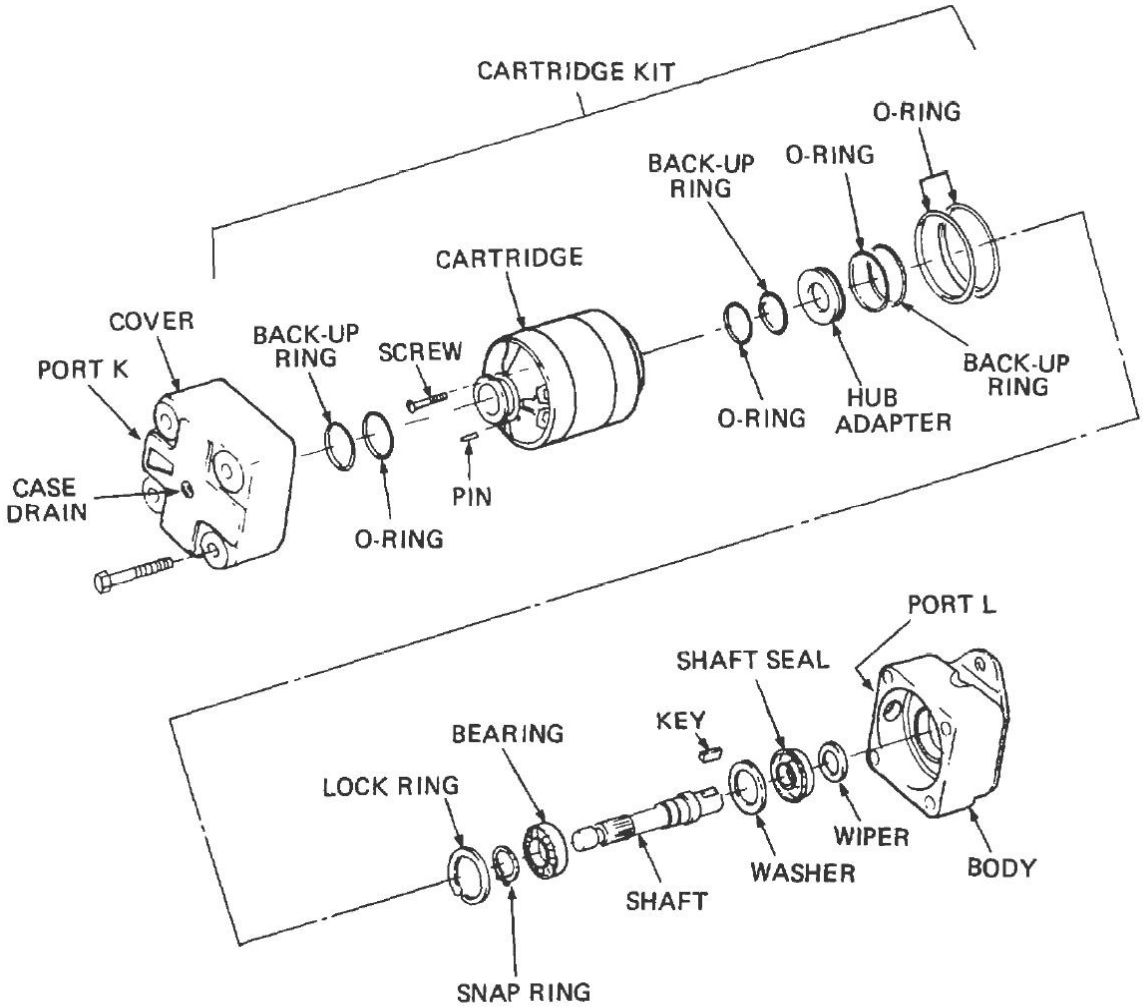

Figure 20 Hydraulic Motor – Exploded View

78. In the fuel discharge function, the pressurised hydraulic fluid entering port K causes the rotor and vane assembly inside the cartridge to rotate. This rotation is transferred to the motor output shaft via the splined connection between the rotor and the shaft. The hydraulic fluid that slips past the vanes in the motor lubricates the bearing and the bush within the motor before returning to the oil reservoir via port L, or the unrestricted drain line (case drain) connected to the motor cover.

79. In the fuel loading function, the pressurised hydraulic fluid entering port L causes the rotor and vane assembly inside the cartridge to rotate in the opposite direction to the fuel discharge function. This rotation is transferred to the motor shaft via the splined connection between the rotor and the shaft. The hydraulic fluid that slips past the vanes in the motor lubricates the bearing and the bush within the motor, before returning to the oil reservoir via port K or the unrestricted drain line (case drain) connected to the motor cover.

Fenner Coupling

80. The Fenner coupling, (Figure 21) transfers the drive from the hydraulic motor to the fuel pump. The coupling comprises two steel flanges which are secured to the motor and pump shafts by contracting split bushes. The two flanges are interconnected by a flexible rubber coupling insert, and require no lubrication or regular maintenance.

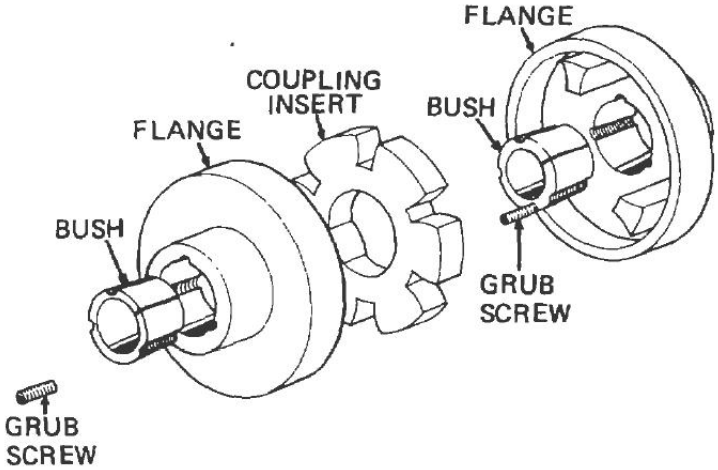

Figure 21 Fenner Coupling – Exploded View

Fuel Pump and Dual Pressure Relief Valve

81. The fuel pump is a vane type pump which receives drive from the hydraulic motor via the Fenner coupling. The coupling is keyed to the pump shaft which forms part of the pump rotor (Figure 22).

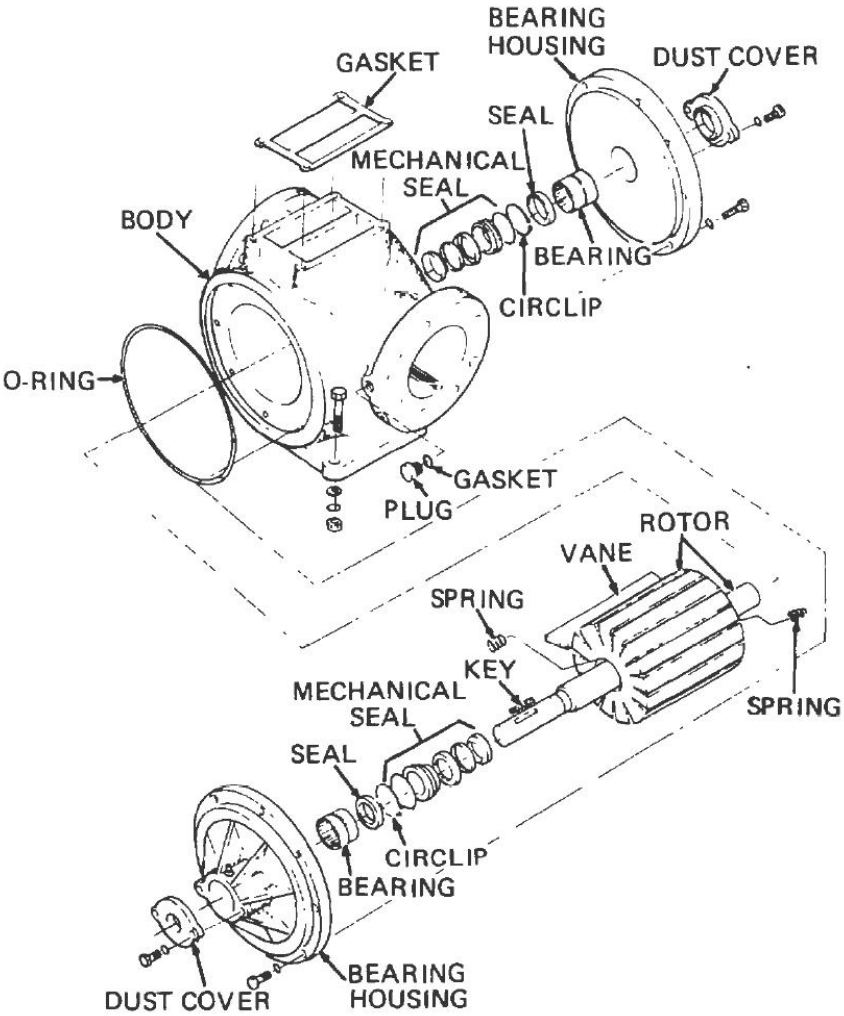

Figure 22 Fuel Pump – Exploded View

82. The vanes are orientated in the rotor (Figure 23) so as to allow the pump to pump fluid in the required direction (i.e. loading or discharging).

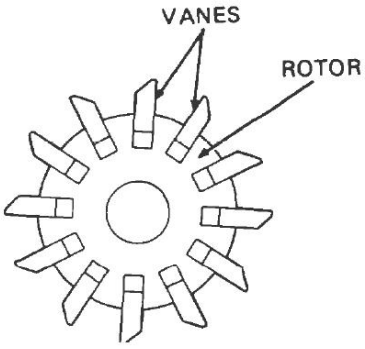

Figure 23 Rotor and Vane Configuration

83. The pump shaft is supported by needle roller bearings in each of the bearing housings. Two grease seals and two mechanical seals provide the necessary sealing for the pump body and bearing housings.

84. The dual pressure relief valve is installed on top of the fuel pump and provides protection for the pump in either direction of rotation. An exploded view of the dual pressure relief valve is shown in Figure 24.

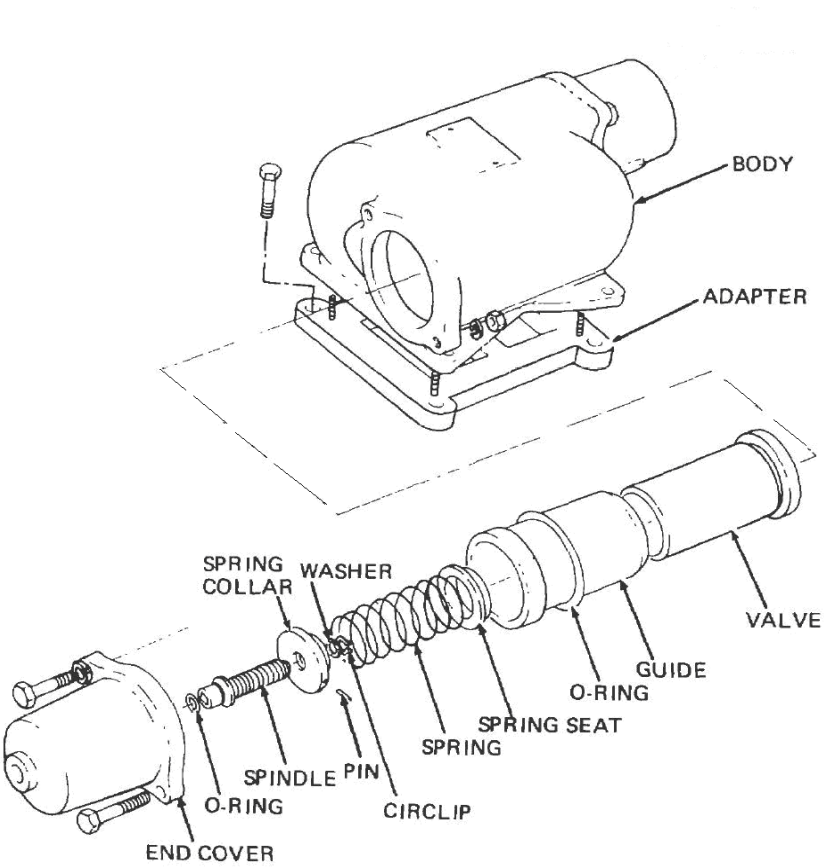

Figure 24 Dual Pressure Relief Valve – Exploded View

85. Operation of the dual pressure relief valve is shown (Figure 25). When pressure increases in the outlet line, fuel is forced up chamber A, unseating piston A, which allows the fuel to be dumped back to the pump inlet via chamber B. Any fuel trapped beneath the piston, escapes via the orifice in each side of the piston. When the fuel has been dumped, piston spring pressure closes the piston until an increase in outlet line pressure repeats the cycle.

86. When the fuel pump is operating in the reverse direction pressure protection is provided by piston B.

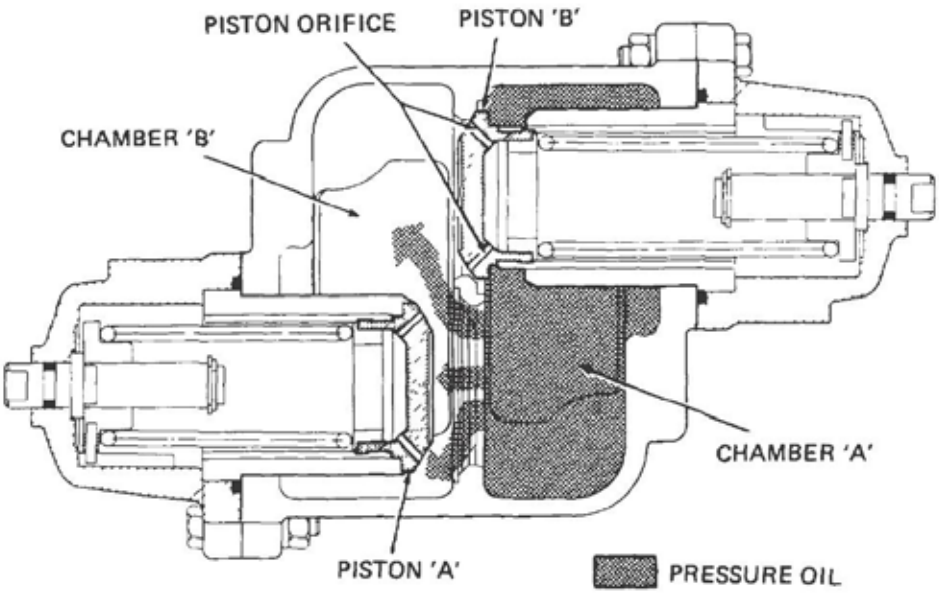

Figure 25 Dual Pressure Relief Valve – Operation

Hydraulic Circuit Control Valves

87. Relief Valve and Interface Assembly. The relief valve and interface assembly are shown (Figure 26). A detailed description of the operation of the relief valve and interface assembly is contained within the hydraulic circuit description (Para 92).

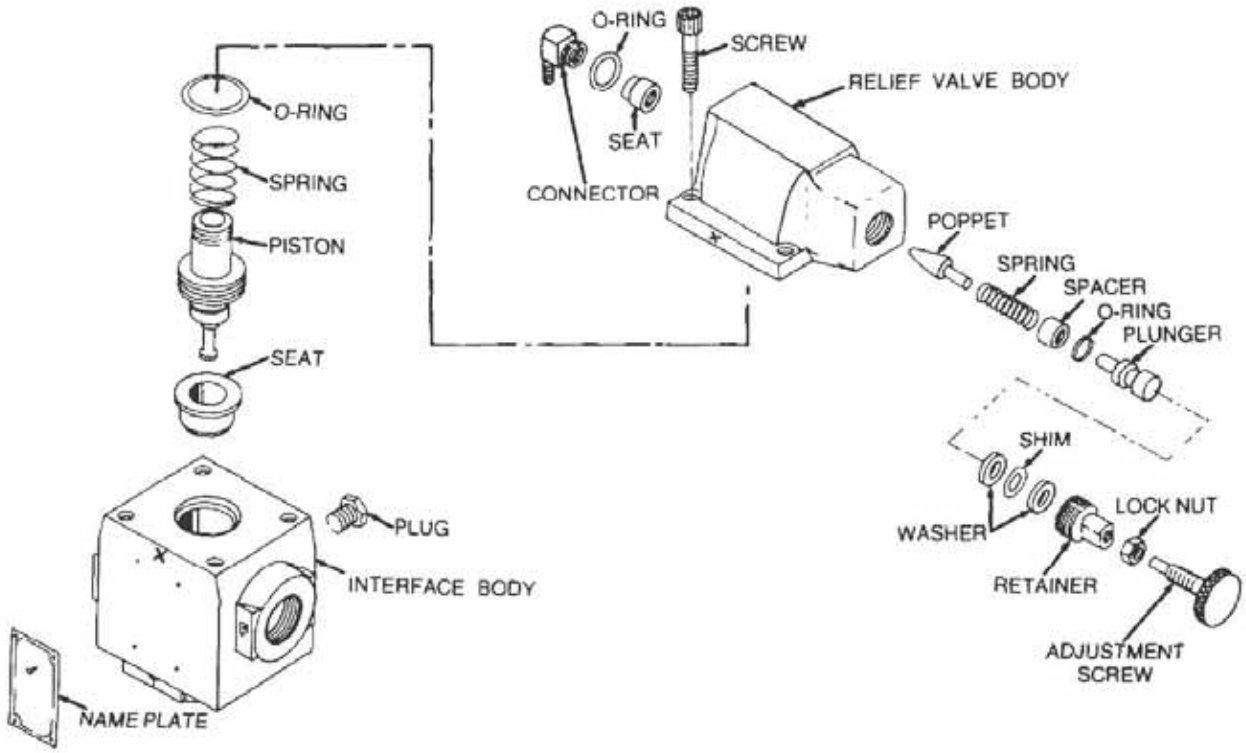

Figure 26 Relief Valve and Interface Assembly

88. Flow Control Valve. An adjustable ball type flow control valve is installed between the interface assembly and the hydraulic motor. This valve controls the flow of pressurised hydraulic fluid to the motor, providing an effective motor speed control (Figure 27).

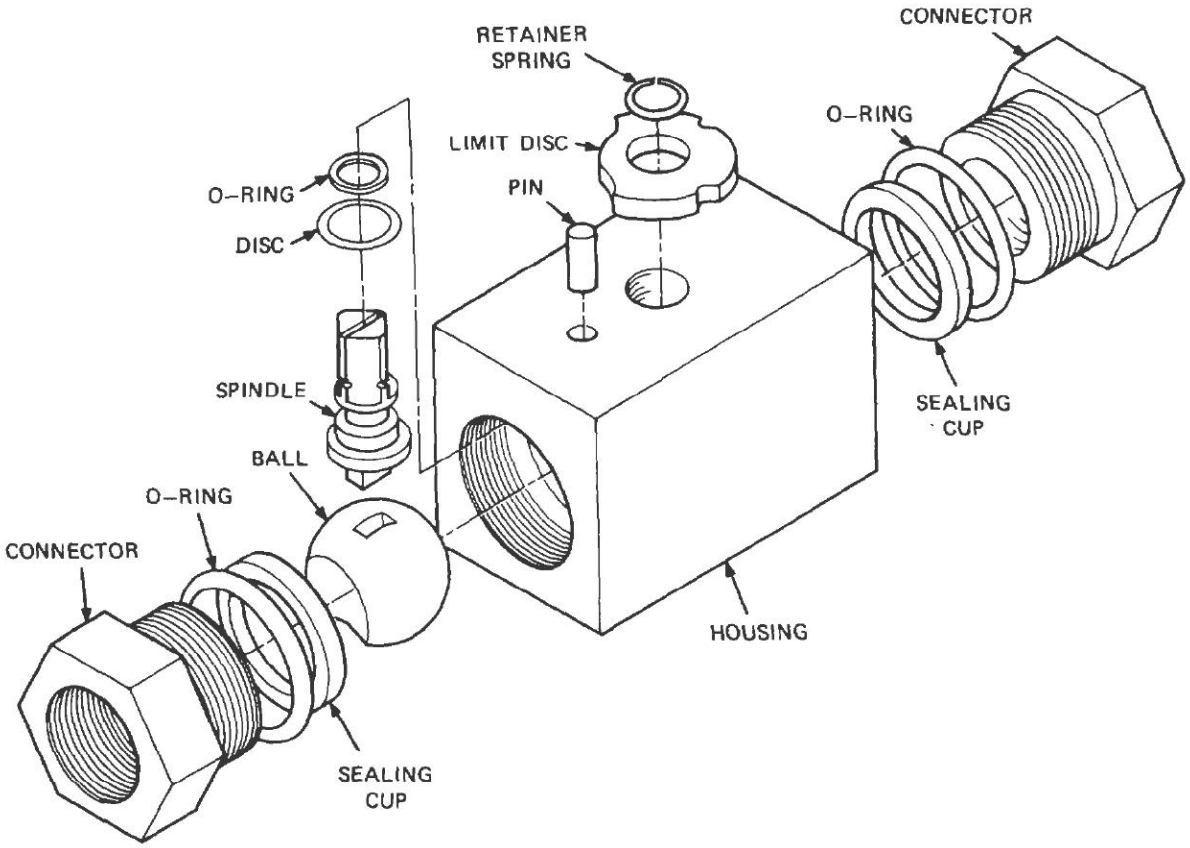

Figure 27 Flow Control Valve – Exploded View

89. Check Valve. The check valve (Figure 28) monitors the fluid pressure across the flow control valve and ensures a constant fluid pressure in the line to the hydraulic motor. Free flow through the check valve occurs at a pressure differential of 34 Kpa (5 psi).

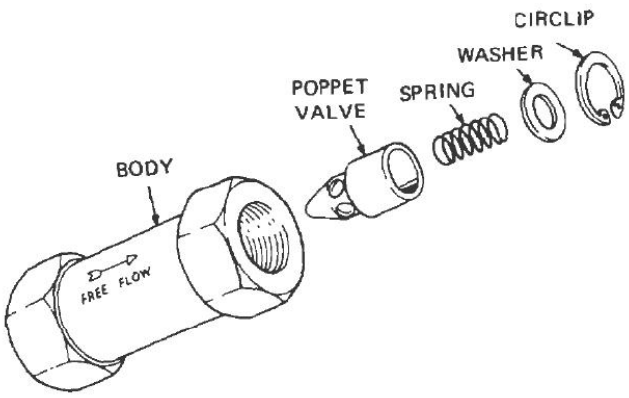

Figure 28 Check Valve – Exploded View

90. Air Operated Directional Control Valve. The air operated directional control valve (Figure 29) is controlled by the pump control valve as follows:

a. In the NEUTRAL position, no air is applied to the control valve and the internal spring pressure centres the valve spool, which directs all pressurised hydraulic fluid back to the oil reservoir.

b. In the LOAD or DISCHARGE position, air is directed to the control valve to move the valve spool in the appropriate direction, thereby allowing pressurised hydraulic fluid to flow to the hydraulic motor. Fluid return to the oil reservoir from the motor is via the air operated directional control valve.

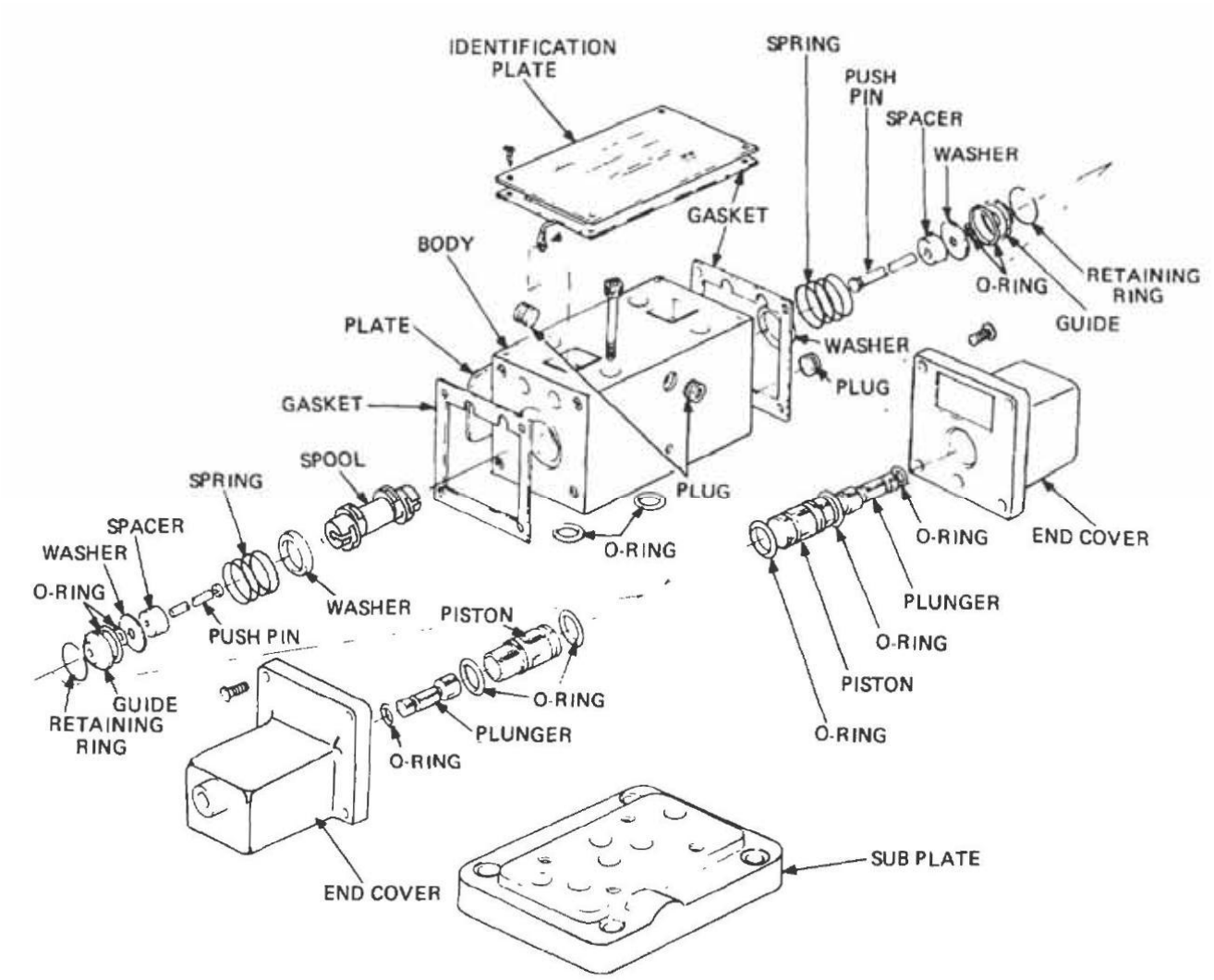

Figure 29 Air Operated Directional Control Valve – Exploded View

91. The air operated directional control valve directs the flow of fluid within the hydraulic circuit either to the motor or the oil reservoir.

Hydraulic Circuit

92. With the PTO engaged and the pump control lever in NEUTRAL, pressurised hydraulic fluid flows through the interface to the air operated directional control valve. As no air pressure is applied to the valve in the NEUTRAL position, the valve spool is centred by internal spring pressure and the pressurised hydraulic fluid flows around the spool and out the tank port to the oil reservoir (Figure 30).

93. With the PTO engaged and the pump control lever is in either the LOAD or DISCHARGE position, air pressure is applied to one of the two air ports on the air operated directional control valve, depending on the position selected. The air pressure moves the valve spool in the appropriate direction, which directs the pressurised hydraulic fluid to the motor (Figure 31). The fluid return line is also opened by the spool, and the hydraulic fluid from the motor is directed back to the oil reservoir.

94. The check valve monitors the fluid pressure across the flow control valve. Any increase in pressure, which may be caused by a stalled motor or pump for example, is reflected back to the relief valve. The increased pressure forces fluid to flow through the orifice in the piston (Figure 32) forcing the relief valve poppet off its seat and dumping fluid back to the oil reservoir through the piston centre drilling. The flow of the fluid through the orifice in the piston creates a low pressure in chamber B. The higher pressure in chamber A overcomes this lower pressure and the piston spring pressure, thereby forcing the piston off its seat. This action dumps the fluid from the high pressure line directly to the oil reservoir thereby relieving the pressure in the line to the motor.

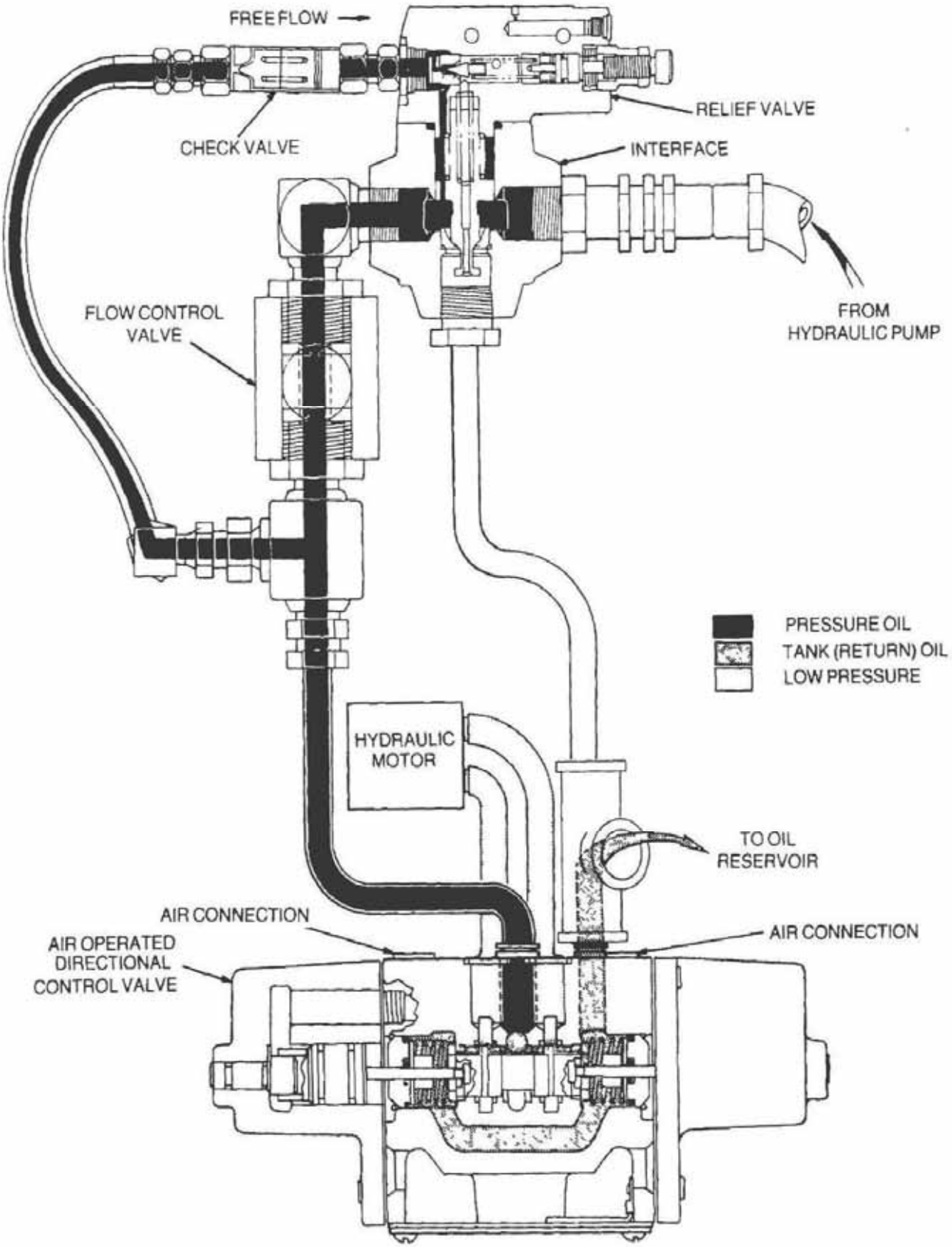

Figure 30 Fluid Flow – Fuel Pump Disengaged

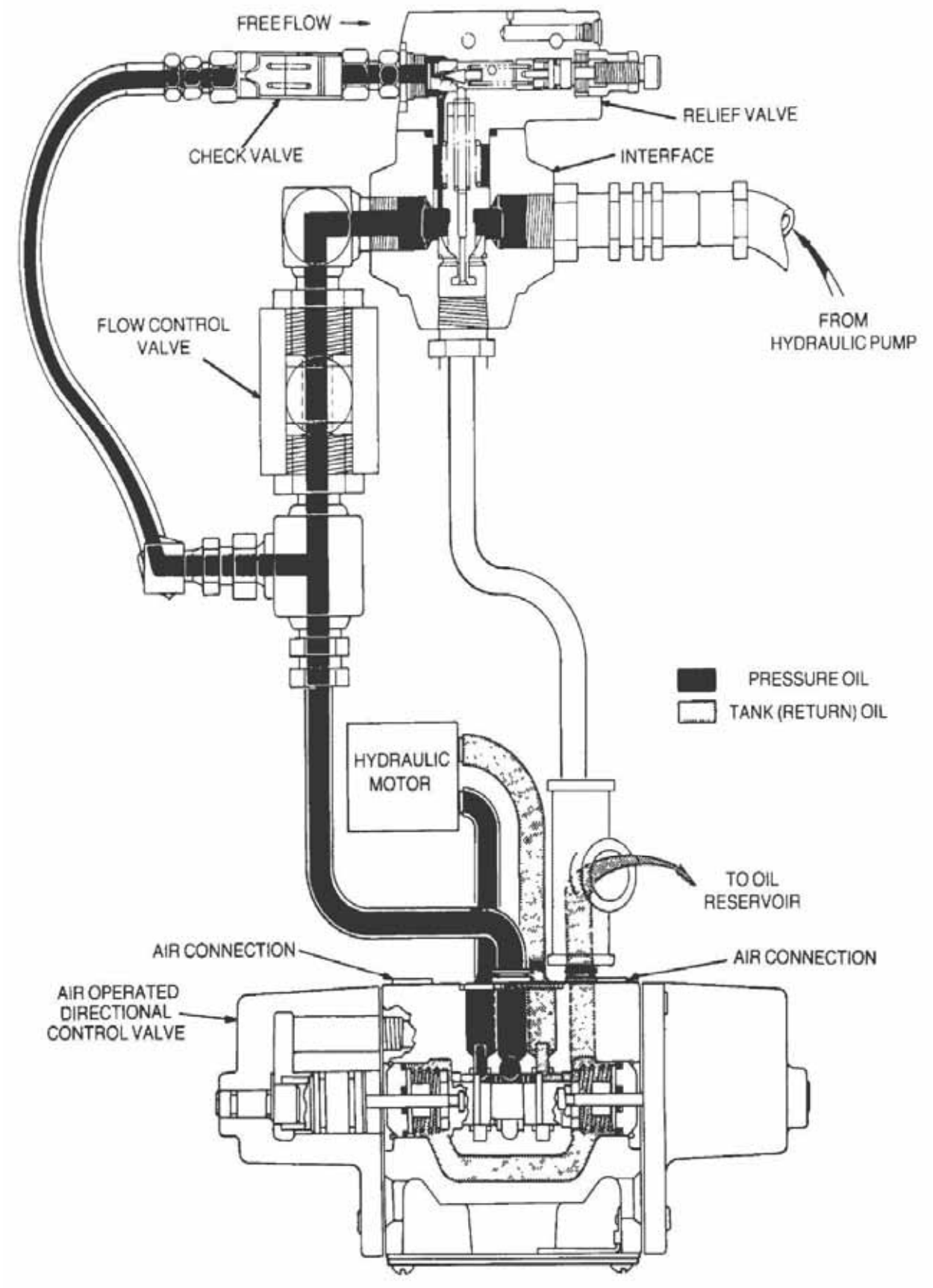

Figure 31 Fluid Flow – Fuel Pump Engaged

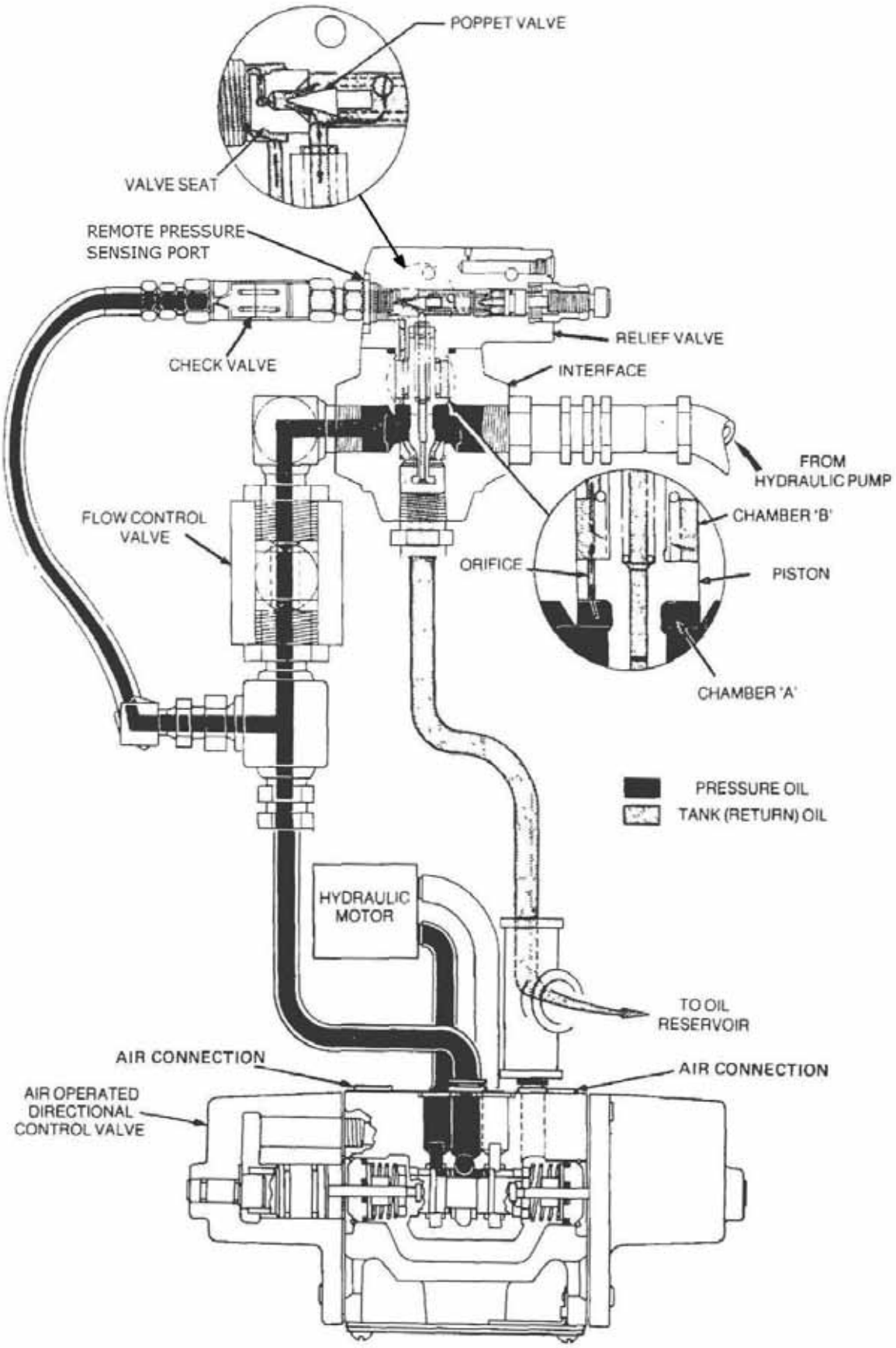

Figure 32 Fluid Flow – Increased Line Pressure (Stalled Motor or Pump)

Fuel Circuit Control Valves

95. Tank Foot Valves. The tank foot valves (Figure 33) control the flow of fuel into and out of each tank compartment. Air pressure, supplied via the appropriate tank control button, enters the cylinder cover and acts on the air piston, forcing the piston rod and pushrod up. This action forces the valve piston up into the dashpot, thereby allowing fuel to flow through the valve. When the air pressure is removed, the valve spring forces the valve piston back down in the dashpot, effectively closing the valve.

WARNING

The automatic shutoff safety systems are bypassed when the compartment foot valve is manually opened. Ensure the tank outlet valves are shut before manually opening the foot valves and only use this method to empty a compartment. Never use it to fill a compartment. Damage to equipment or injury to personnel may occur.

96. In case of an air system failure, the tank foot valve can be manually opened from the bottom using a special tool which is supplied with each tanker.

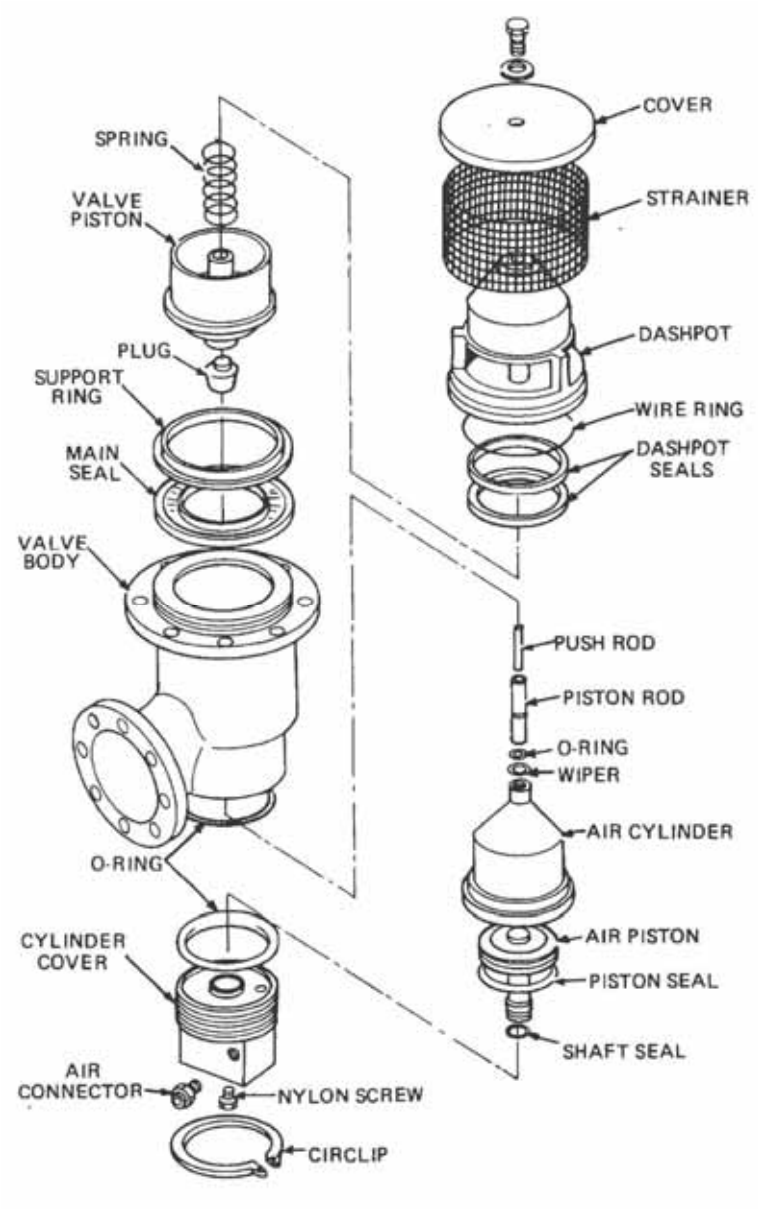

Figure 33 Tank Foot Valve – Exploded View

97. Tank Outlet Valves (API Valve). The API valves (Figure 34) control the flow of fuel. The valves, which are hand operated and spring-loaded, are held open by the over-centre self locking mechanism. The internal spring will close the valve once the control handle has been moved past the over-centre point.

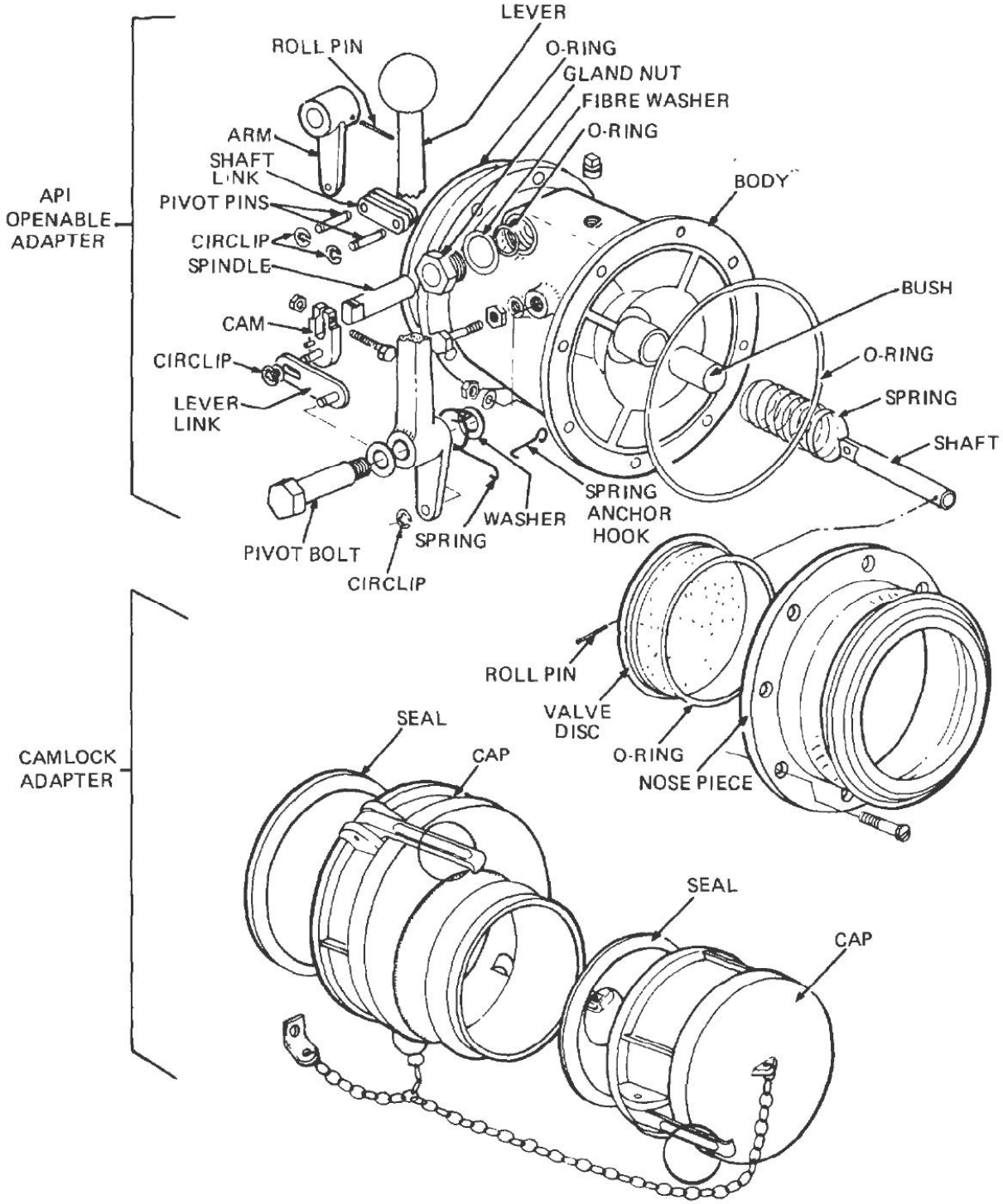

Figure 34 Tank Outlet Valve – Exploded View

98. Fuel Pump Inlet/Outlet Valve. The fuel pump inlet and outlet valves are hand operated butterfly valves. An O ring installed in the periphery of the disc provides the valve sealing surface when shut (Figure 35).

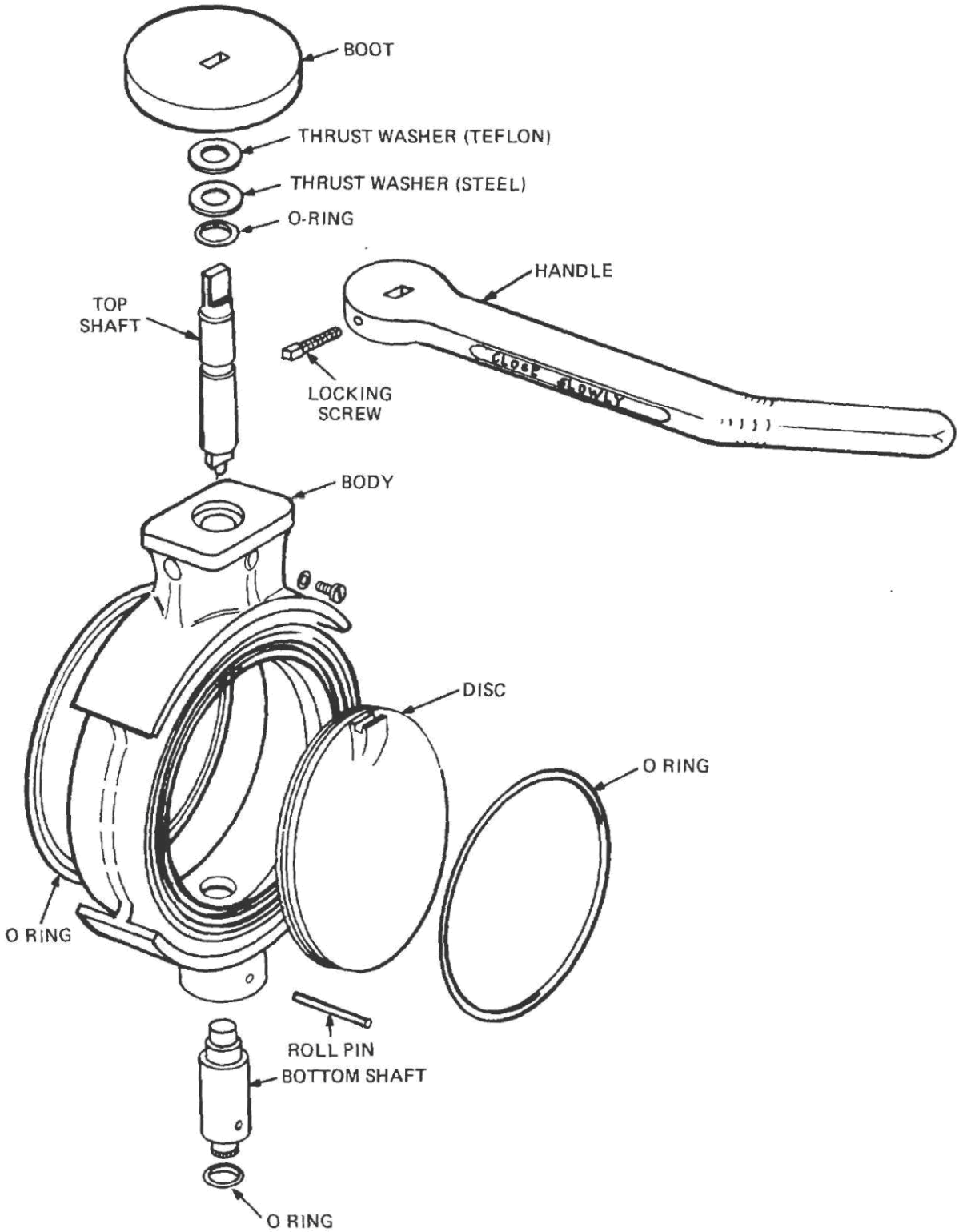

Figure 35 Fuel Pump Inlet/Outlet Valve – Exploded View

99. Vacuum Break Valve. The vacuum break valve (Figure 36) is used to break the vacuum in the fuel lines which tends to occur as the fuel lines are purged of residual fuel. The vacuum break valve return spring is set to open when the line pressure reaches equals 64.75 mm Hg (8.6 Kpa).

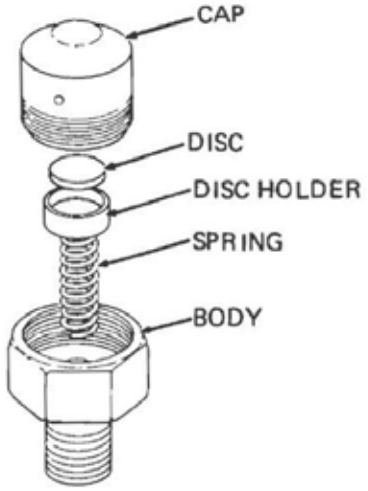

Figure 36 Vacuum Break Valve – Exploded View

100. Non-return Valve. The non-return valve (Figure 37) employs two spring-loaded plates hinged on a central vertical pin. When fuel is being pumped through the valve, the plates are held open by the flow of fuel. When the fuel flow decreases, the plates are rapidly closed by the torsion springs without the requirement of reverse fuel flow.

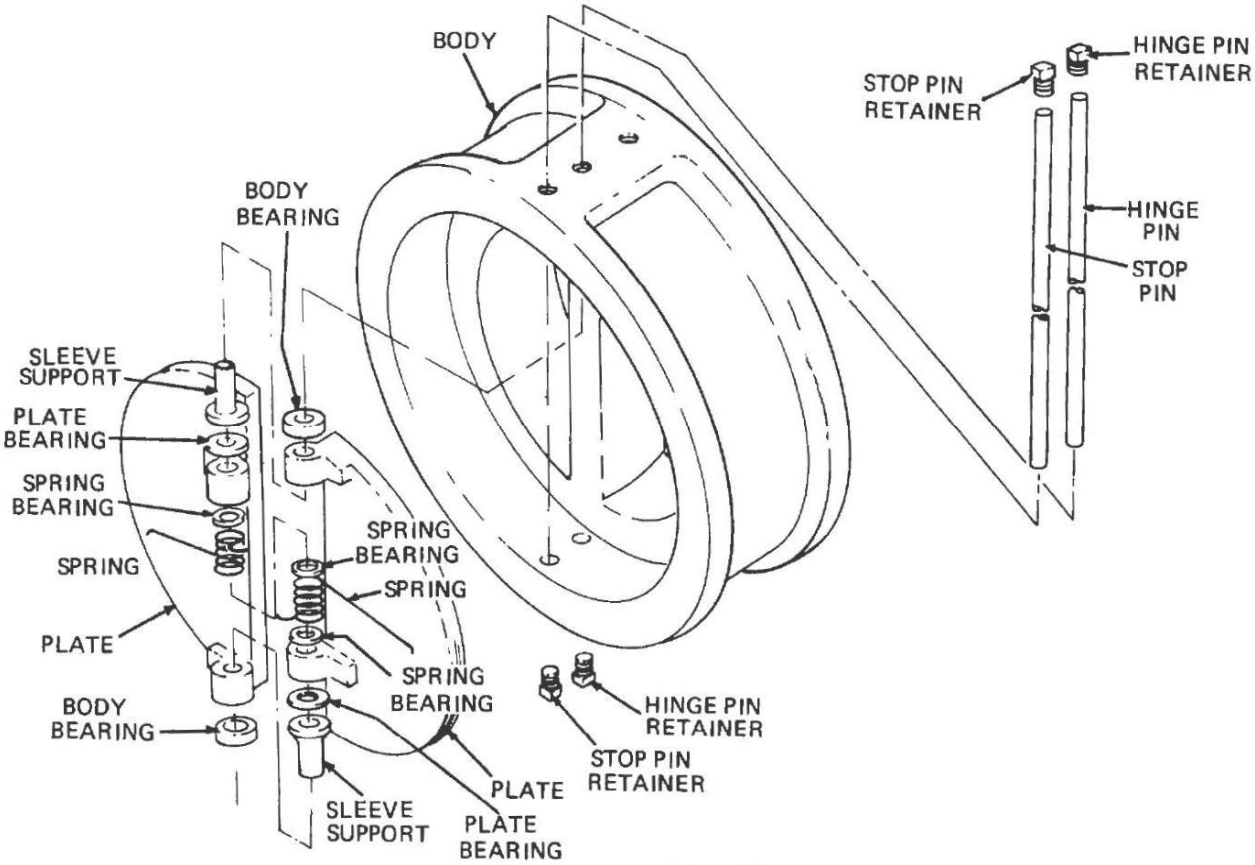

Figure 37 Non-return Valve – Exploded View

101. Hose Reel Isolation Valves. The hose reel isolation valves are hand operated ball valves fitted to the hose reel supply pipe. Operation of the isolation valve allows the isolation of a faulty hose reel. This reduces unacceptable maintenance downtime as well as the safety and environmental implications as a result of uncontrolled product spills from a faulty hose reel.

Hose Nozzles

102. Each hose nozzle (Figure 38) has a check valve in the spout, a two-stage valve in the body and a one-way valve in the swivel section of the hose input.

103. Fuel from the fuel pump forces the valve disc and associated washers off the valve body in the swivel section of the hose input and flows into the nozzle body. Squeezing the nozzle lever up forces the stem and (upper) disc holder up the body, raising the upper disc off the (lower) disc holder providing an initial pressure release and allowing fuel to flow down the spout to the check valve. Squeezing the nozzle lever further up moves the stem further up the body forcing the lower disc off its seat and allowing fuel to flow at the maximum rate.

104. The check valve, which opens at 55 Kpa (8 psi), is incorporated in the nozzle spout to prevent fuel seepage when the nozzle is not in use.

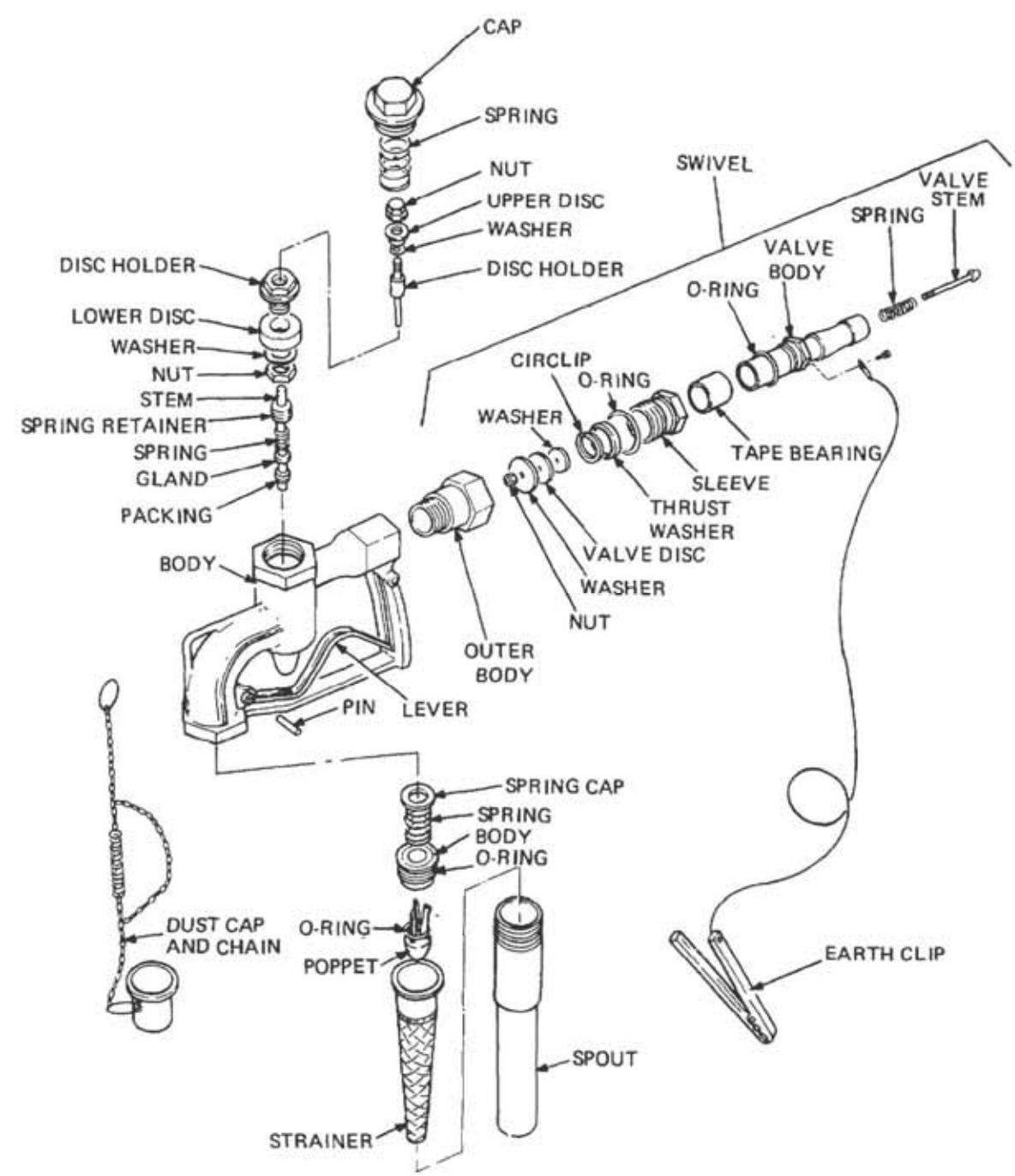

Figure 38 Hose Nozzle – Exploded View

Pressure and Vacuum Vent

105. In normal operation, the two steel balls in the vent are positioned as shown (Figure 39), and the internal spring pressures hold the pressure and vacuum valves shut. A small amount of free venting is provided by the orifice in the pressure valve.

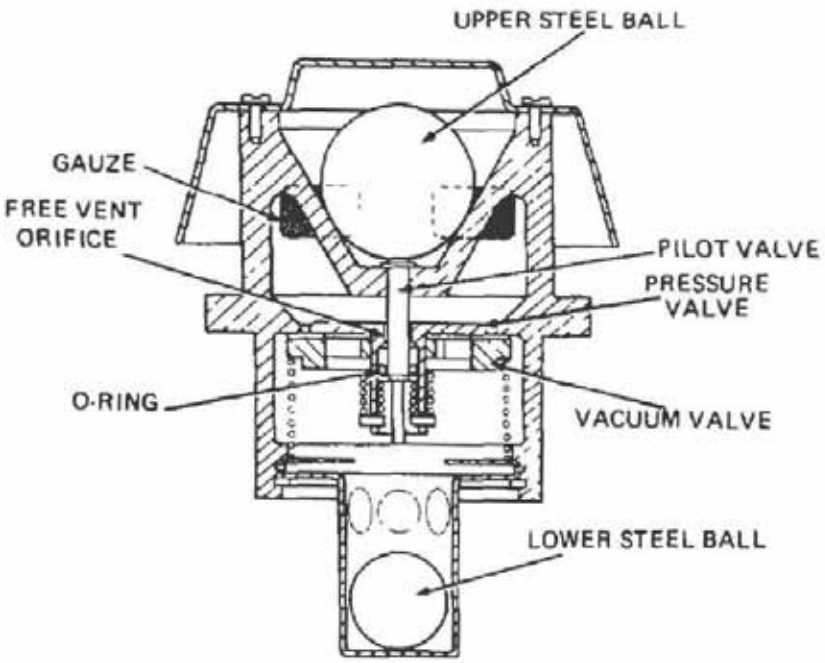

Figure 39 Pressure and Vacuum Vent – Normal Operation

106. When the pressure within a tank compartment builds up, the pressure valve is forced off its seat and the increased pressure is vented to the atmosphere (Figure 40). Spring pressure will gradually return the valve to its normal position as the tank pressure decreases.

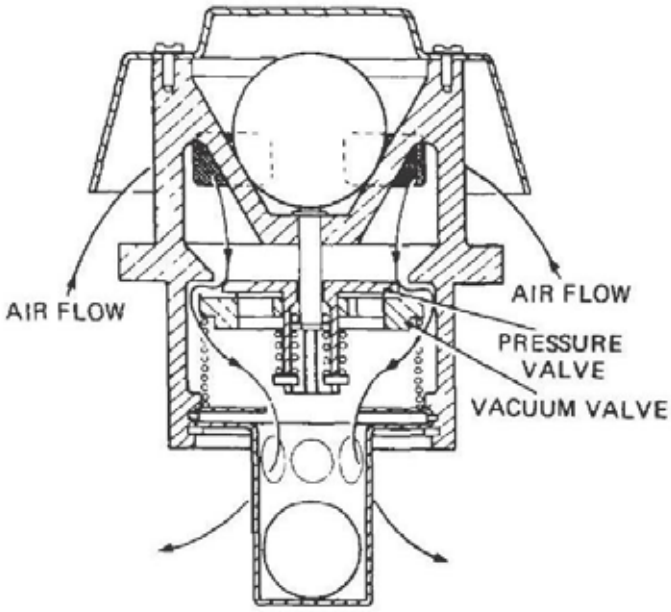

Figure 40 Pressure and Vacuum Vent – Pressure Operation

107. If a vacuum occurs within a tank compartment, both the pressure and vacuum valves will be drawn into the vent body, venting the tank compartment to the atmosphere (Figure 41). Spring pressure will gradually return the valves to their normal position as the tank vacuum decreases.

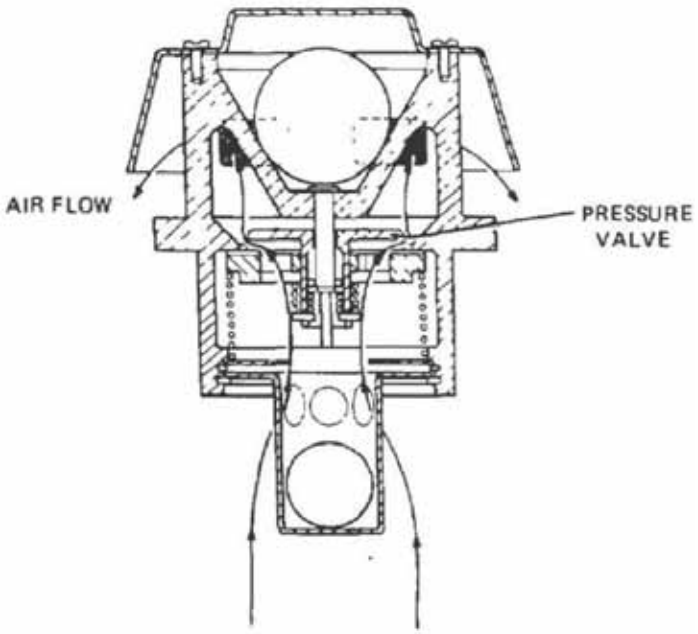

Figure 41 Pressure and Vacuum Vent – Vacuum Operation

108. In the event of the fuel tanker rolling over, the upper steel ball is dislodged from the pilot valve. The pilot valve is forced up under spring pressure, sealing the free vent orifice with its O ring and allowing the lower steel ball to seat in the bottom of the vent, effectively sealing the vent. The lower steel ball is then held in position by fuel pressure (Figure 42).

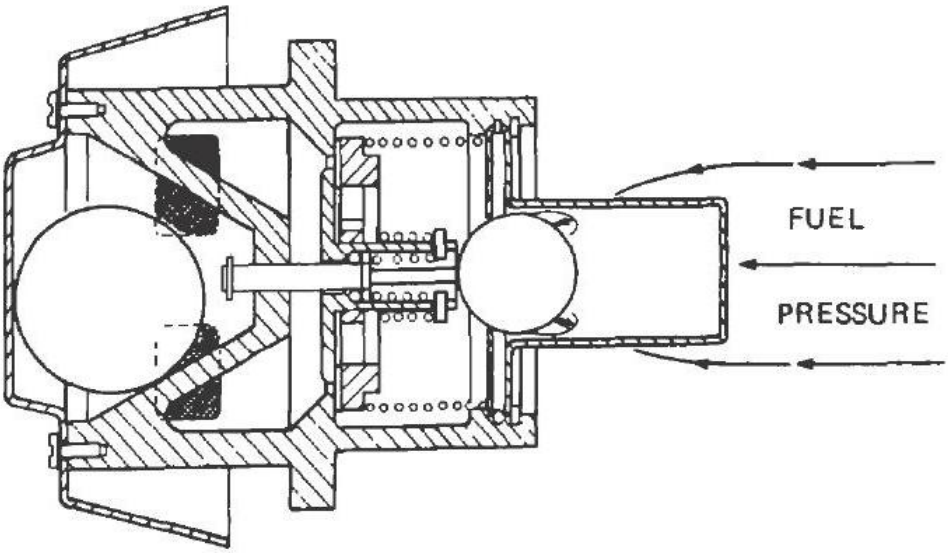

Figure 42 Pressure and Vacuum Vent – Roll Over Situation

109. In addition to the vents installed in each access cover, a pressure and vacuum vent is installed in the vapour line connected between the vapour transfer vents and the vapour tube at the rear of the tanker. As this vent is side-mounted, the two steel balls have been removed and the vent operates as a pressure and vacuum vent without roll over sealing properties.

Scully Overfill Detection Socket

110. The Scully overfill detection socket contains a dummy socket that provides an electronic means of configuring the ten pole socket to recognise the tankers three compartments. Connection of the Scully overfill detection plug into the overfill detection socket (Figure 43) depresses the plunger on the Clippard valve, opening the outlet port and directing supply air to the valves necessary for fuel loading. The connection with the loading bay also provides the circuit for the electronic signal necessary to stop fuel loading when the safe fill level is reached.

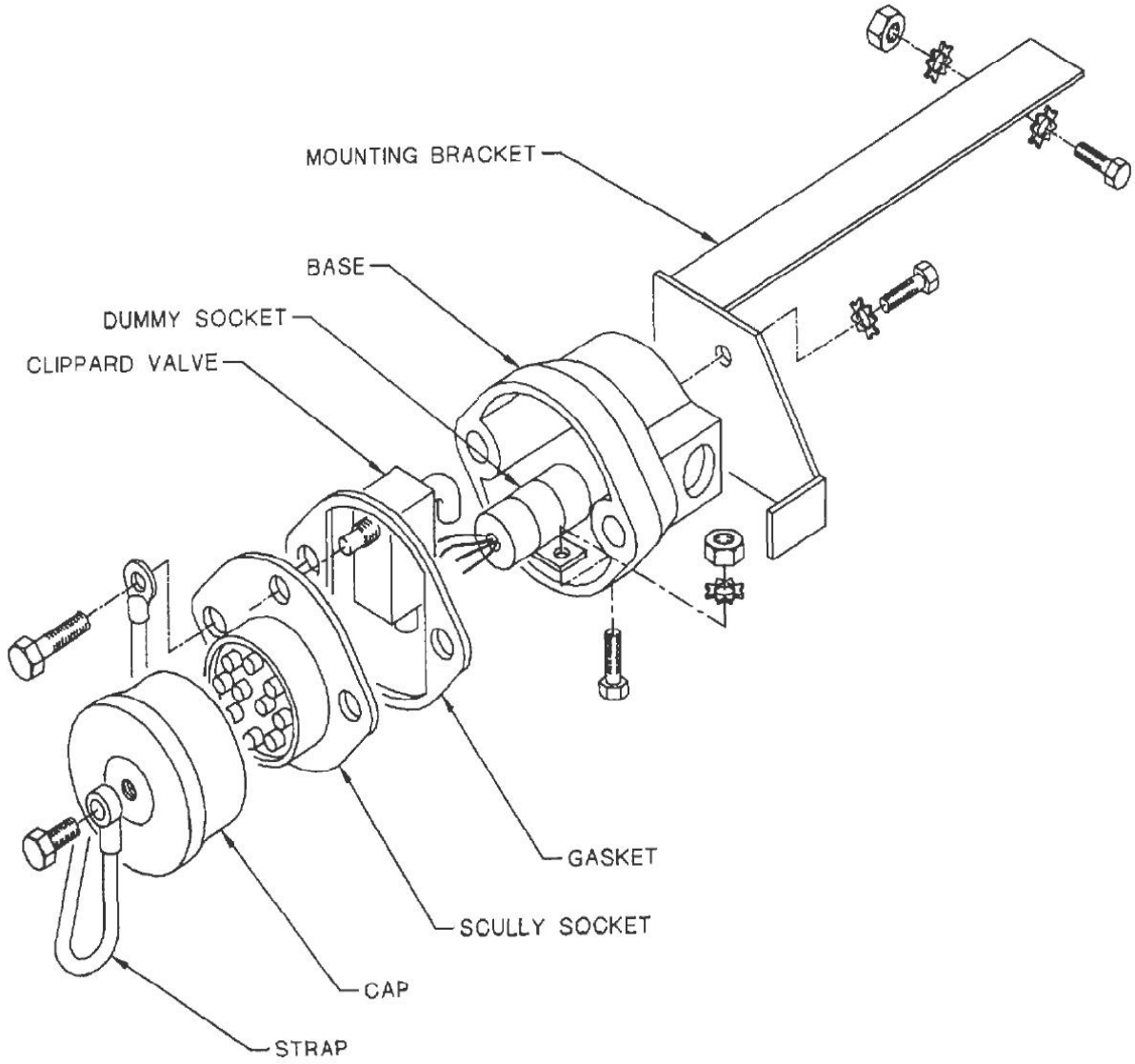

Figure 43 Scully Overfill Detection Socket – Exploded View

Scully Optical Probe

111. The Scully optical probe (Figure 44) provides an automatic method of halting fuel loading when the safe fill level is reached. The probe is mounted in the top of each compartment and adjusted to 10 mm above the safe fill level as indicated on the dipstick. The bottom of each probe contains a light prism electronically linked to the Scully overfill detection socket. As the fuel level rises during loading, light is excluded from the prism, sending a signal to the loading bay to stopping loading.

Fuel Circuit

112. The fuel tanker discharging and loading operations are controlled from the control box, the operation of the outlet gate, and where required, the use of the Scully detection socket. Air pressure supplied via the control box is essential for the operation of the tank level sensors, the vapour transfer vents, the tank foot valves and the selection of the fuel pump rotation (that is, DISCHARGE or LOAD). The raising of the outlet gate directs air, via the roller gate valve, in sequence to the inversion valve, Clippard valve, shuttle valve assembly, vapour vents and the junction box.

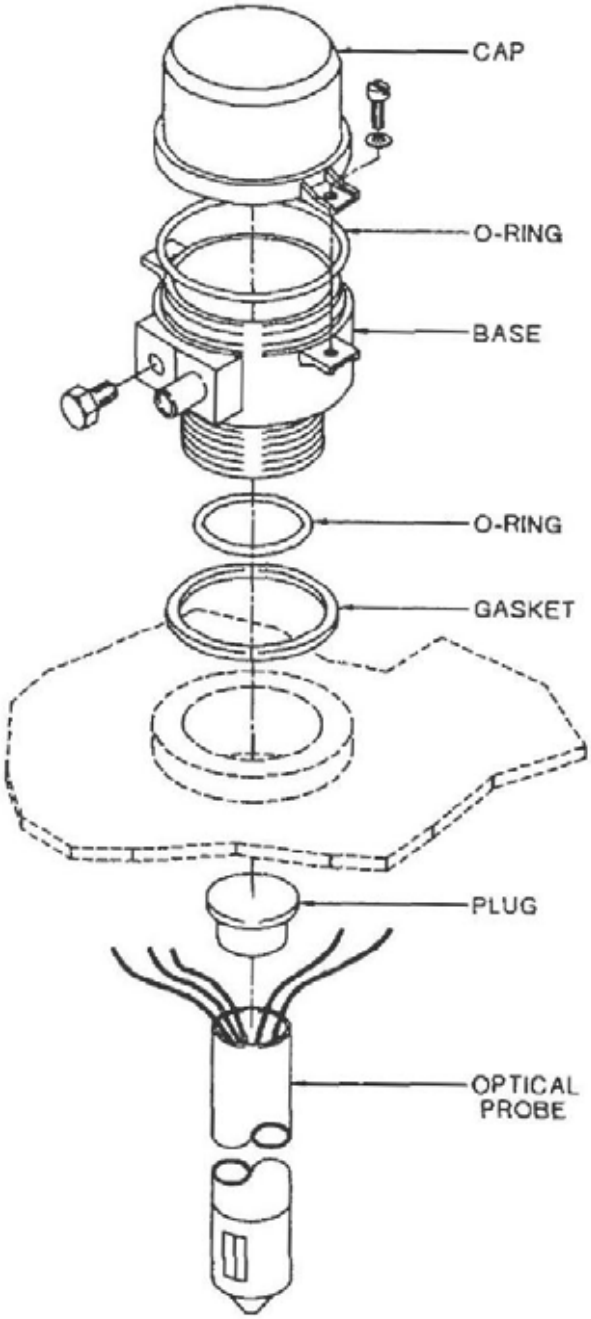

Figure 44 Scully Optical Probe – Exploded View

113. When discharging of the fuel circuit is required (Figure 45), air pressure, via the appropriate control buttons, activates the tank foot valve and the vapour transfer vent of the compartment selected, allowing fuel to flow under gravity to the tank outlet valve. Each tank outlet valve, which is a hand operated spring loaded piston valve, controls the fuel flow into the outlet manifold. Two more hand operated butterfly valves control the fuel flow via a flexible hose into the fuel pump. The pump control lever in the control box selects the direction of rotation of the fuel pump. With this lever in the DISCHARGE position, the fuel pump draws fuel from the outlet manifold and pumps it under pressure to the hose reels and outlet branch butterfly valve for further distribution as required.

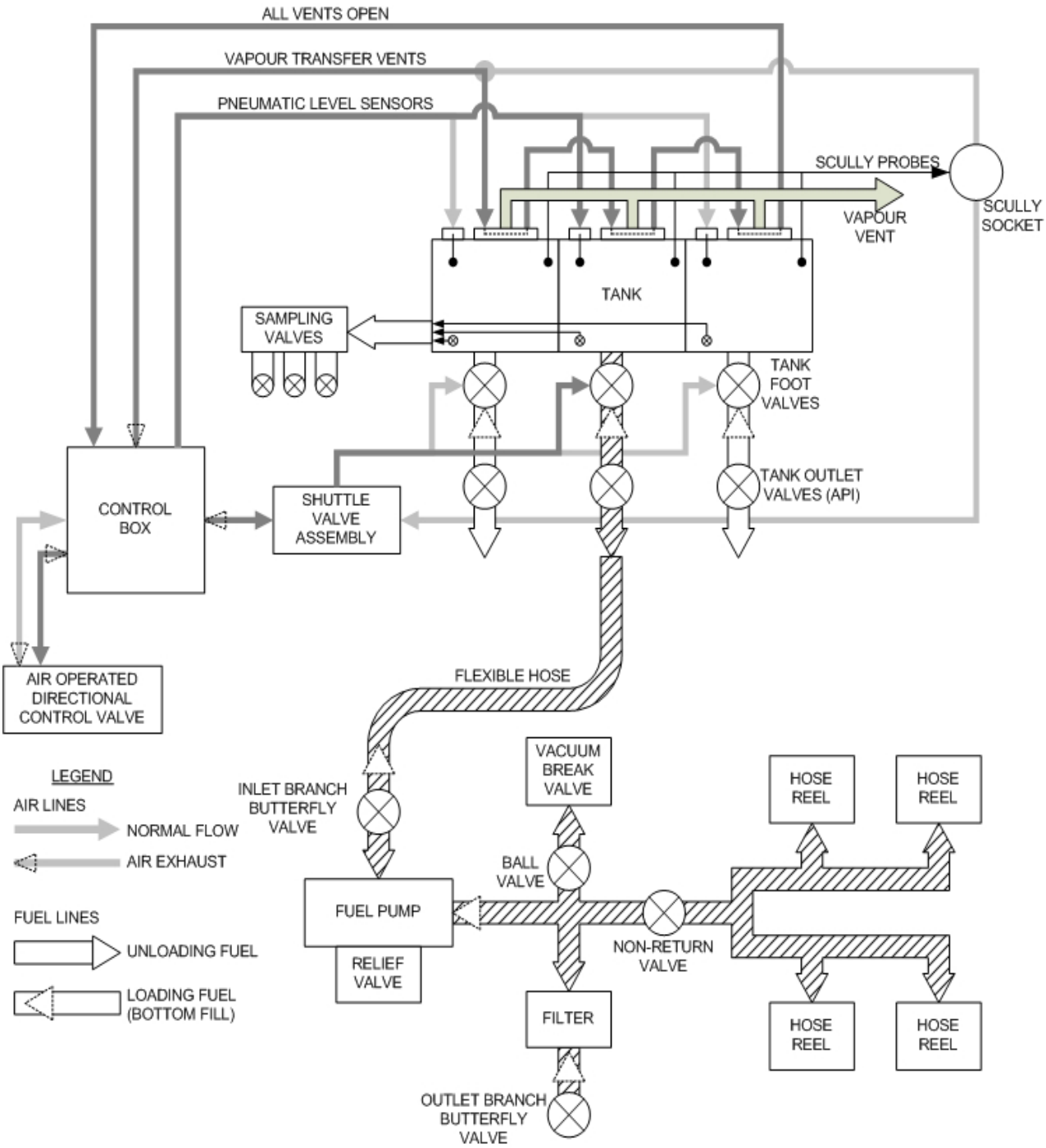

Figure 45 Fuel Circuit – Using Tanker's Pump

Bottom-loading Procedures

114. Bottom-loading is achieved by one of the following methods:

a. using the tanker's pump;

b. using an external pump in conjunction with the Scully overfill detection socket; or

c. using an external pump not incorporating the Scully overfill detection socket.

Bottom-loading using the Tanker's Pump

CAUTION

If the foot valves have been manually overridden, the vapour transfer vents and the safe fill sensors are not activated. Once the safe fill level is reached, the foot valve will not automatically shut off. Environmental or equipment damage may occur.

115. When bottom-loading using the fuel tanker's pump, the appropriate tank foot valves and vapour transfer vents are activated to allow fuel to flow into the selected compartment. The level sensors are activated to prevent overfilling.

116. With the pump control lever in the LOAD position, the fuel pump draws fuel from the outlet branch through the filter and pumps it under pressure via the flexible hose to the desired tank outlet valve. Fuel enters the selected tank compartment via the open tank outlet and foot valves.

117. The compartment level sensor will shut off the corresponding foot valve when the fuel reaches the safe fill level for the compartment.

Bottom-loading using an External Pump and Scully Overfill Detection Socket

118. When bottom-loading using an external pump (Figure 46) and the Scully overfill detection socket, the loading bay's Scully overfill detection plug must be connected to the tanker's Scully overfill detection socket. Air is directed to the Clippard valve and the inversion valve when the outlet gate is raised. A flexible hose is connected to the tank outlet valve of the compartment to be filled.

119. Connection to the Scully overfill detection socket diverts air to the shuttle valve assembly to activate the tank foot valves, the pilot/spring valves and the vapour transfer valves. The brake switch inside the junction box is activated and a signal sent to the loading bay to commence pumping, open the external source delivery valve and the tank's outlet valve and start the external pump.

120. Fuel enters the selected compartment through the open tank outlet valve and the corresponding foot valve. As the fuel level rises and covers the Scully optical probe, light is excluded from the probe therefore activating a signal to the loading bay via the Scully overfill detection socket that stops the external pump.

NOTE

Hose purging is not required when using the Scully overfill detection socket.

Bottom-loading using an External Pump without Scully Overfill Detection Socket

121. When bottom-loading using an external pump without the Scully overfill detection socket, a flexible hose is connected to the selected tank outlet valve and the external source delivery valve. The corresponding tank foot valves and vapour transfer vents are activated from the control panel to allow fuel to flow into the selected compartment.

122. The level sensors are also activated to prevent overfilling. With the external source delivery valve and the tank's outlet valve open, fuel enters the selected compartment through the open tank outlet valve and the corresponding foot valve. The compartment level sensor shuts off the compartment's foot valve when the fuel reaches the safe fill level.

123. The vacuum break valve, in conjunction with the ball valve, breaks the vacuum in the fuel lines which occurs as the fuel lines are purged of residual fuel on completion of pumping.

Air Circuit Control Valves

124. Hold Back Valve. The hold back valve is a diaphragm type valve which is set to open at 550 Kpa (80 psi) and pass air to the fuel control air circuit. In the event of an air leak in the circuit, the hold back valve will shut off to prevent draining the secondary air reservoir.

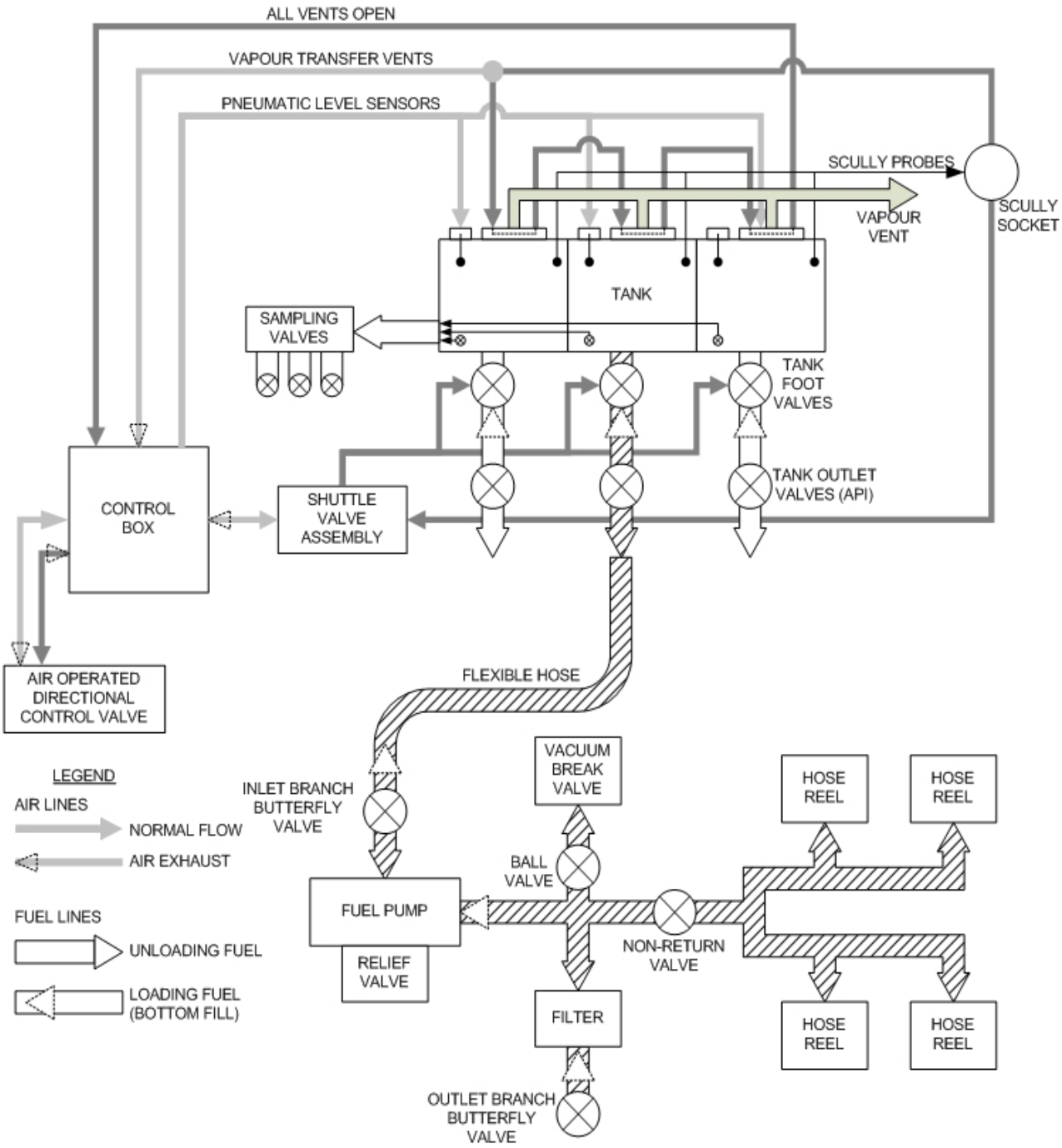

Figure 46 Fuel Circuit – Using Scully Overfill Detection Socket

125. Control Button Valve. The control button valve (Figure 47) is activated by pulling the button out, which permits air from the supply port (port A) to flow to ports B and D, which are interconnected within the valve housing. As air pressure builds in port D (level sensor lines), the piston is forced up into the housing allowing air to flow from port A, between the piston and the guide and into port C which is connected to the foot valve. The red indicator will appear in the transparent cap to indicate that air is supplied to both the level sensor and the foot valve. The build-up in air pressure in the level sensor line (port D), also holds the control button in the on position.

126. When the tank compartment safe fill level is reached, the level sensor will vent the air line to port D and spring pressure will return the control button to the off position. The corresponding tank foot valve will shut immediately and the red indicator will disappear from view as the piston has returned to the rest position. When the control button is in the off position, both the foot valve port and level sensor port are internally connected to the control valve exhaust vent.

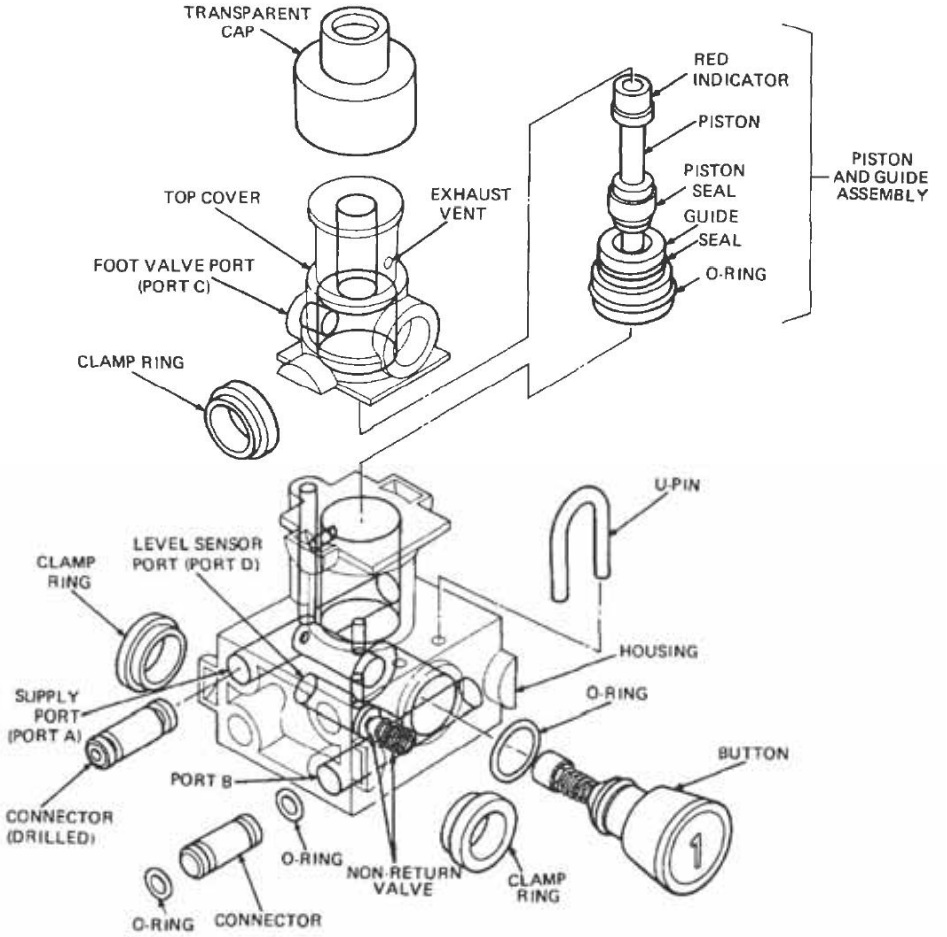

Figure 47 Control Button Valve – Exploded View

127. Air distribution within the control valves (Figure 48) is shown with the six buttons in the off position. The supply air input from port A of control valve E is interconnected, via the A drillings to the control valves for compartments 1, 2 and 3. Ports C and D of each control valve are internally vented while line B for control valves E, 1, 2 and 3 is vented via the air return poppet valve. Line B for control valves L and U is not connected to the air circuit and therefore does not require venting for correct circuit operation.

128. When the E button is in the on position (Figure 49), the supply air is distributed in two directions as follows:

a. Air passes through the restricting orifice, increasing in pressure, and out to the air return poppet valve via line B. Because the poppet valve is closed and port D is plugged, pressure in the line builds and acts on the back of the control valve button, holding the valve open, and moves the piston which opens port C. The distributed air has no effect on control valves 1, 2 and 3 due to the non-return valves incorporated in each control valve.

b. Distributed air flows from port C to the flow control valve and to control valves L and U. Air is applied to these control valves via the A drillings but, as both control valves are in the off position, no further air distribution takes place.

129. To initiate the LOAD condition, the E and L control buttons are placed in the on position (Figure 50). Air is distributed through the control valve L in two directions as follows:

a. Air passes through the restricting orifice increasing in pressure through the non-return valve to Line B, and up to port D. As port D is blocked, the air pressure acts on the back of the control valve, overcoming the spring pressure and holding the button open, and moves the piston, which opens port C. The air in line B has no effect on control valve U due to the non-return valve.

b. Distributed air flows from port C to the vapour transfer vents via the shuttle valve.

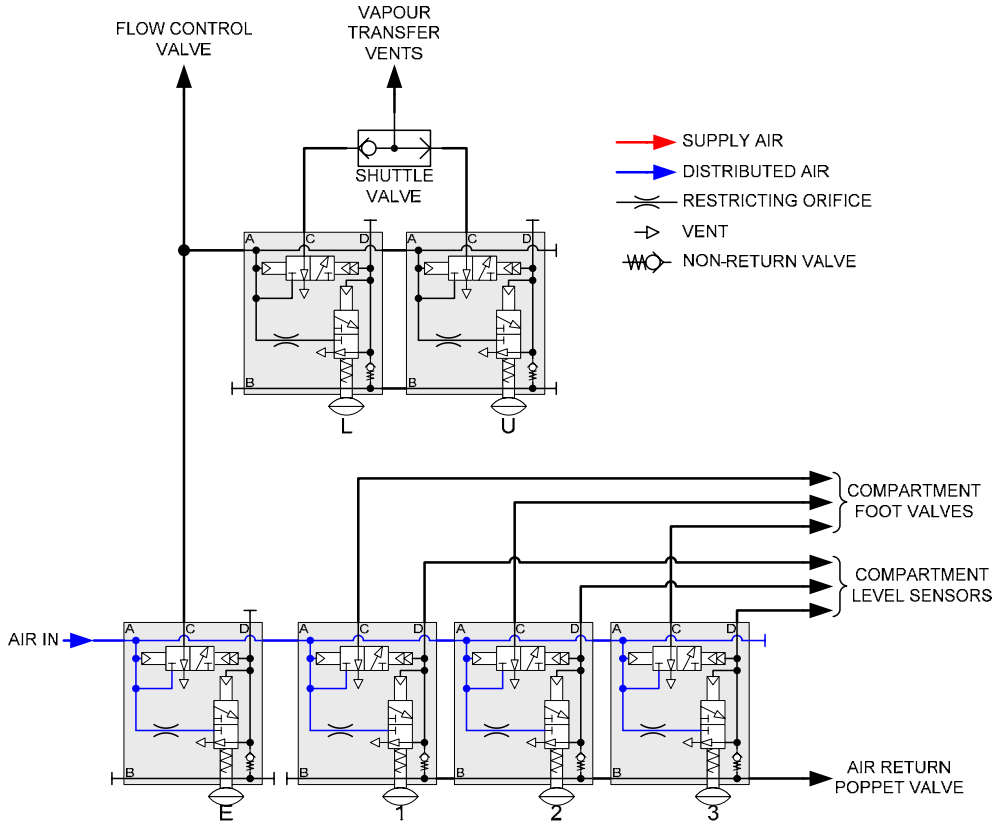

Figure 48 Air Distribution – All Control Valves Off

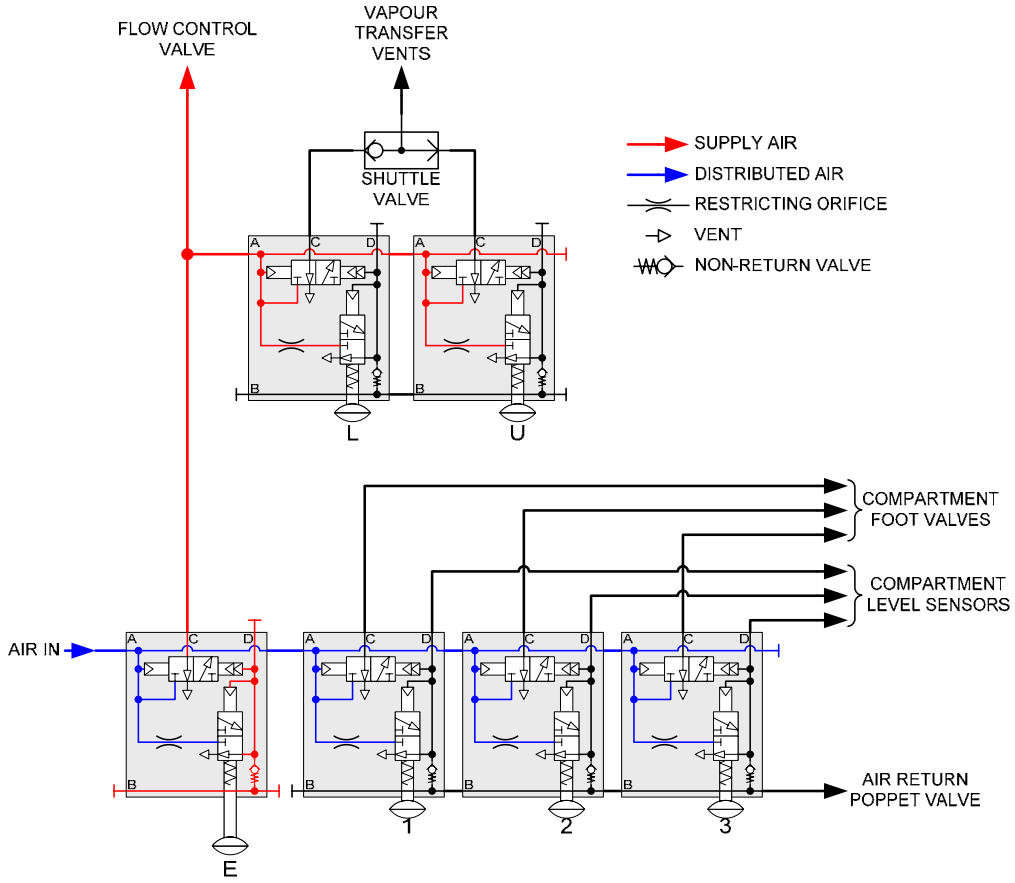

Figure 49 Air Distribution – Emergency Valve On

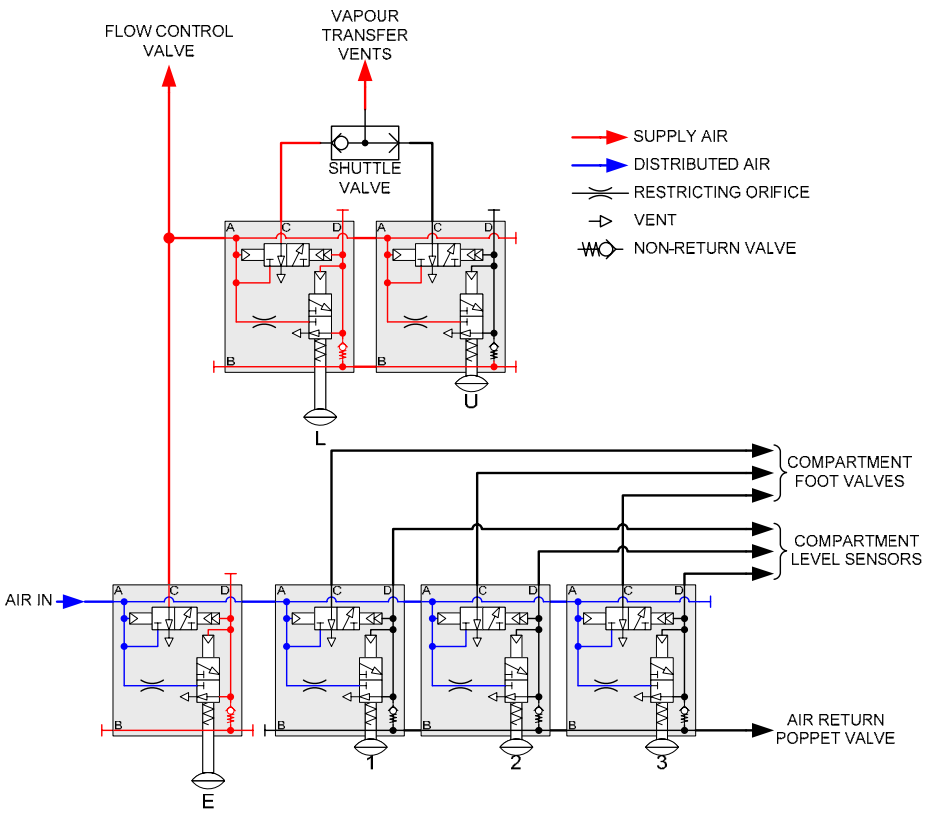

Figure 50 Air Distribution – Emergency and Load Valves On

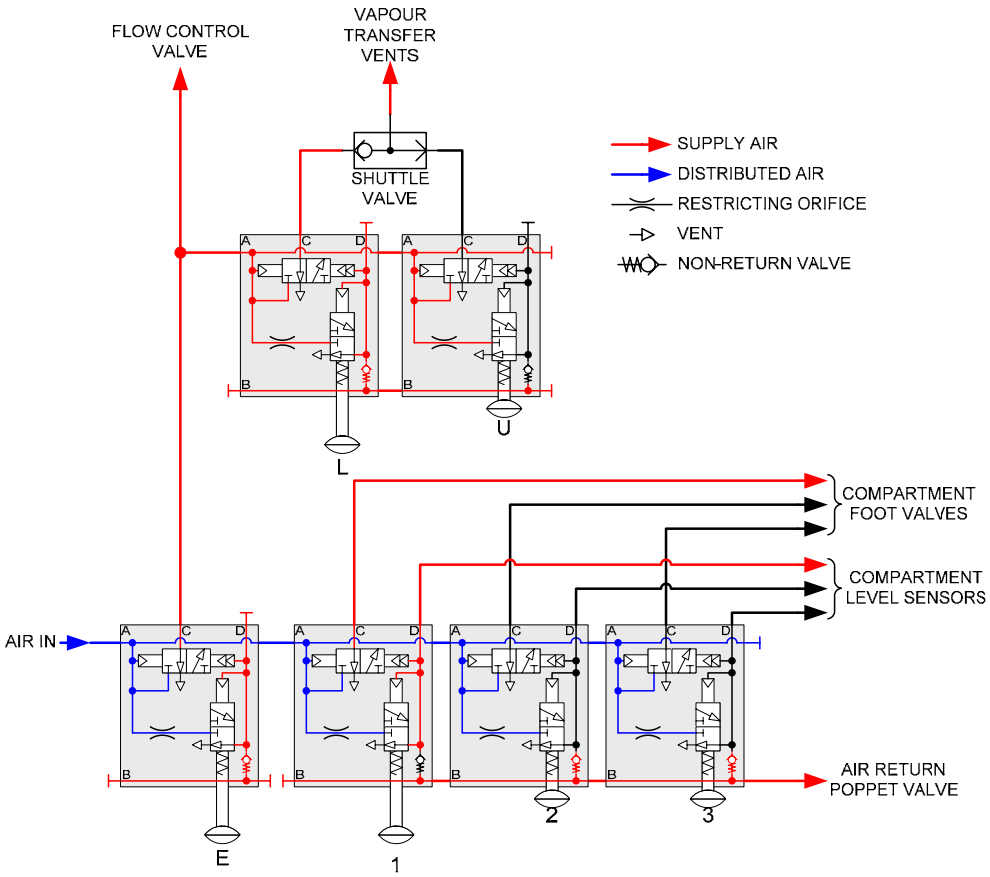

Figure 51 Air Distribution – Loading Compartment No 1

130. To complete the load conditions, the appropriate tank compartment button or buttons must be selected. In the example shown (Figure 51), tank compartment No. 1 has been selected. Air is distributed through control valve 1 in two directions as follows:

a. Air passes through the restricting orifice, increasing in pressure, and out through port D to the level sensor (as line B is already pressurised, no air flows through the non-return valve). With the level sensor shut, air pressure builds in the line and acts on the back of the control valve, overcoming the spring pressure and holding the button open, and moves the piston, which opens port C.

b. Distributed air flows from port C to operate the corresponding tank foot valve.

131. The loading sequence may be terminated by the tank compartment reaching its safe fill level or by pressing the emergency button (E) as follows:

a. When the tank compartment safe fill level is reached, the compartment level sensor vents the line from port D of the corresponding control valve (Figure 51). As the line is vented faster than air can pass through the restricting orifice, the pressure on the control valve and piston is relieved. The button spring pressure shuts the valve and the piston returns to its rest position, closing port C. As no air is now supplied to the foot valve, it shuts immediately. With the control button in the off position, both the foot valve line (port C) and the level sensor line (port D) are internally connected to the control valve vent.

b. Pressing the emergency control button (E) connects the valve ports C and D to the internal vents, cutting-off the air supply to the load control valve (L). Spring pressure now closes the L valve, connecting the valve ports C and D to the internal vents. With no air in the vapour transfer vent lines, the air return poppet valve exhausts line B from control valves E, 1, 2 and 3. The non-return valve in control valve 1 will open due to the drop-in pressure in line B, thereby venting the level sensor line (port D). This allows spring pressure to shut control valve 1 which in turn shuts the compartment foot valve.

132. Poppet Valves. An exploded view of the poppet valve is shown (Figure 52). With no signal air applied to the operating head, internal spring pressure positions the piston to connect ports 1 and 2. When the signal air is applied, port 1 is blocked and port 2 is connected to port 3.

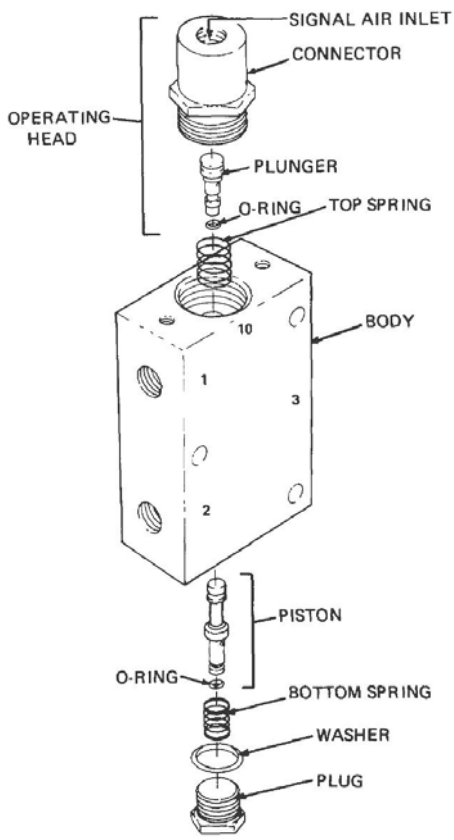

Figure 52 Poppet Valve – Exploded View

133. Flow Control Valve. The flow control valve (Figure 53) is capable of operating as a metered valve or a free flow valve. In the fuel control air circuit, the valve is used as a metered valve.

134. Air enters the inlet port and forces the valve against the body. Air continues to flow through an orifice between the valve and the body and out the outlet port. The orifice size can be varied by the adjusting screw.

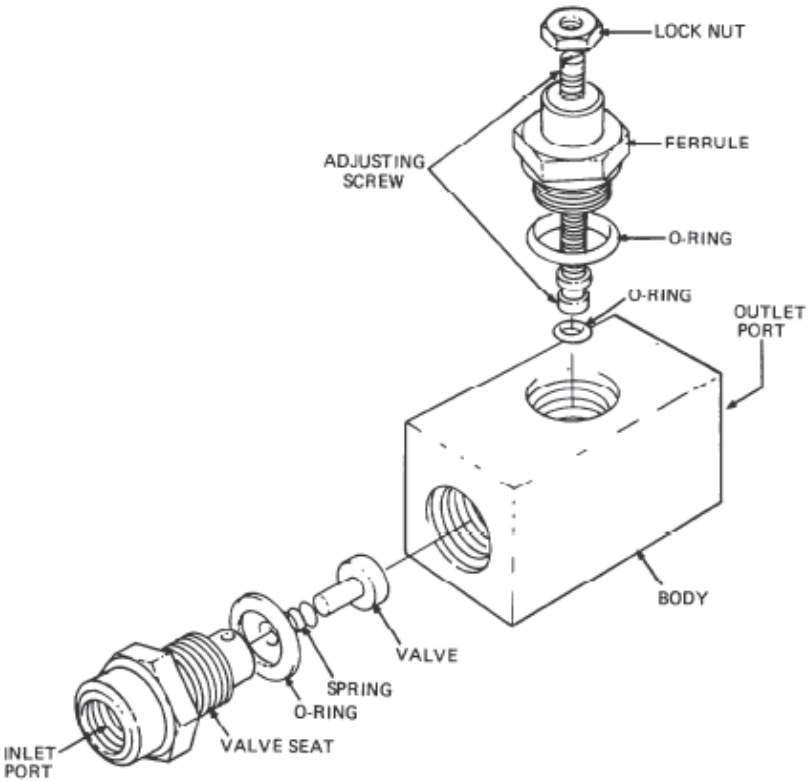

Figure 53 Flow Control Valve – Exploded View

135. Pump Control Valve. The pump control valve (Figure 54) is a three-position valve which directs air to the directional control valve which controls the operation of the hydraulic motor as follows:

a. In the NEUTRAL position, the channel in the slide interconnects the load, discharge and vent ports thereby exhausting both lines to the air operated directional control valve. Air input to the pump control valve fills the body chamber and acts on the back of the slide, which assists the two springs in sealing the slide to the outlet port body.

b. In the LOAD position, the slide permits air to flow out the load port while still connecting the discharge port to the vent port.

c. In the DISCHARGE position, the slide permits air to flow out the discharge port while still connecting the load port to the vent port.

136. There are three flat surfaces on the spindle with one surface corresponding to each position of the lever. The hex plug and the two springs retain the cap against the selected flat surface to ensure positive location of the spindle and slide in each position of the lever.

137. Air Operated Directional Control Valve. With the pump control valve in the NEUTRAL position, no air is supplied to the directional control valve and internal spring pressure centres the valve spool, inhibiting the flow of pressurised hydraulic fluid to the hydraulic motor.

138. In the LOAD or DISCHARGE position, air from the pump control valve is applied to the directional control valve, moving the spool in the appropriate direction to allow pressurised hydraulic fluid to flow to the motor. In both the LOAD and DISCHARGE positions, the return air line to the pump control valve is vented internally in that valve.

139. Shuttle Valve. An exploded view of the shuttle valve is shown (Figure 55). When air is applied to one of the inlet ports, the piston is forced against the plug at the opposite port which directs the air to the outlet port.

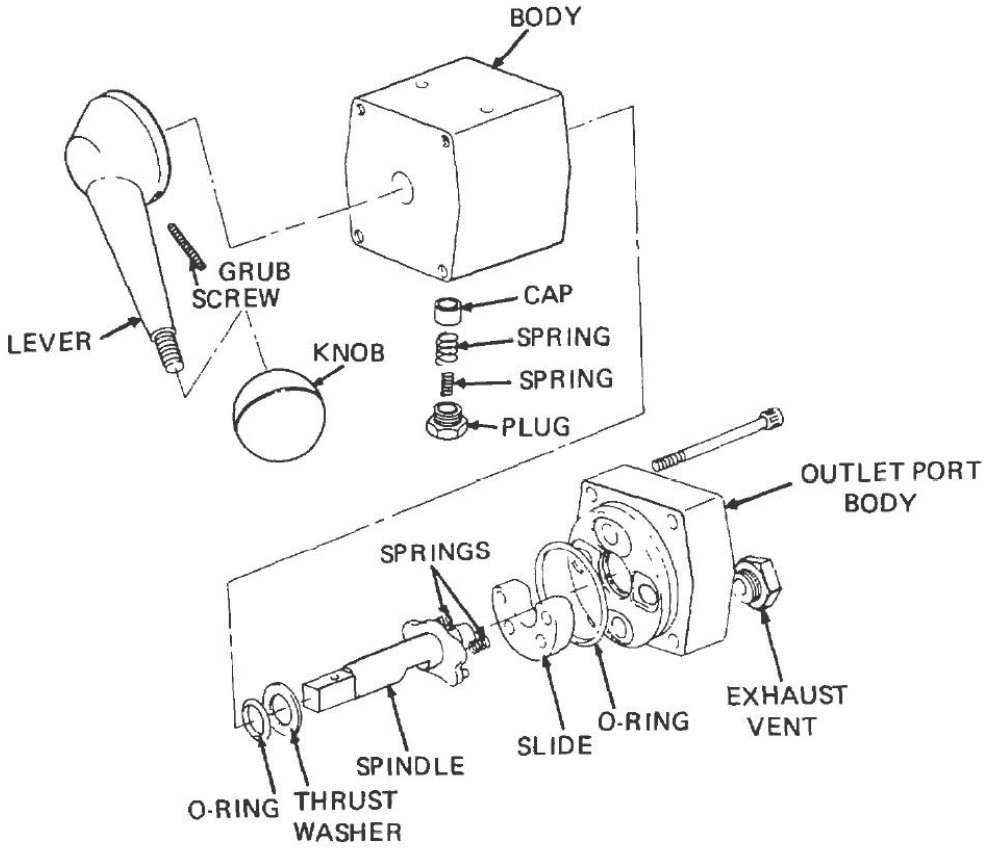

Figure 54 Pump Control Valve – Exploded View

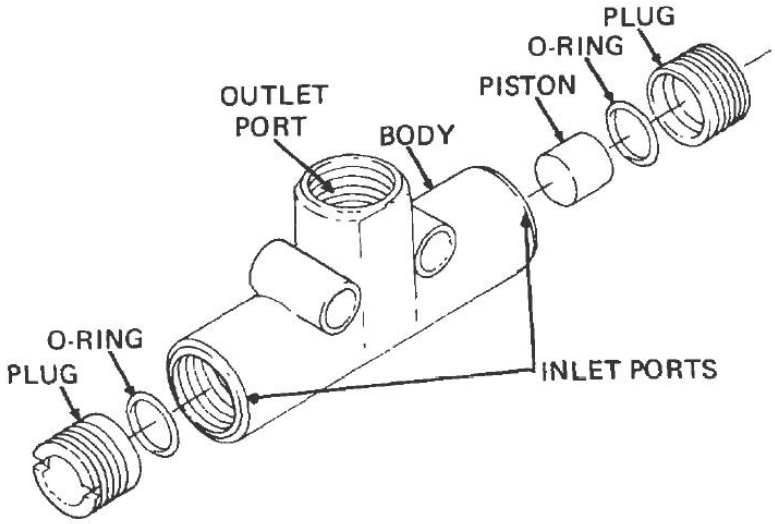

Figure 55 Shuttle Valve – Exploded View

140. Vapour Transfer Vent. Air from a shuttle valve is applied to the inlet port in the cover of the vapour transfer vent (Figure 56) and into the upper chamber of the vent, where it acts on the diaphragm. The build-up in air pressure forces the diaphragm down which in turn opens the disc allowing vapour to exhaust via the vent body. When the vent is fully open, air passes through the centre and cross drillings of the spindle and out the vent return port. Air then passes on to the next vapour transfer vent in sequence.

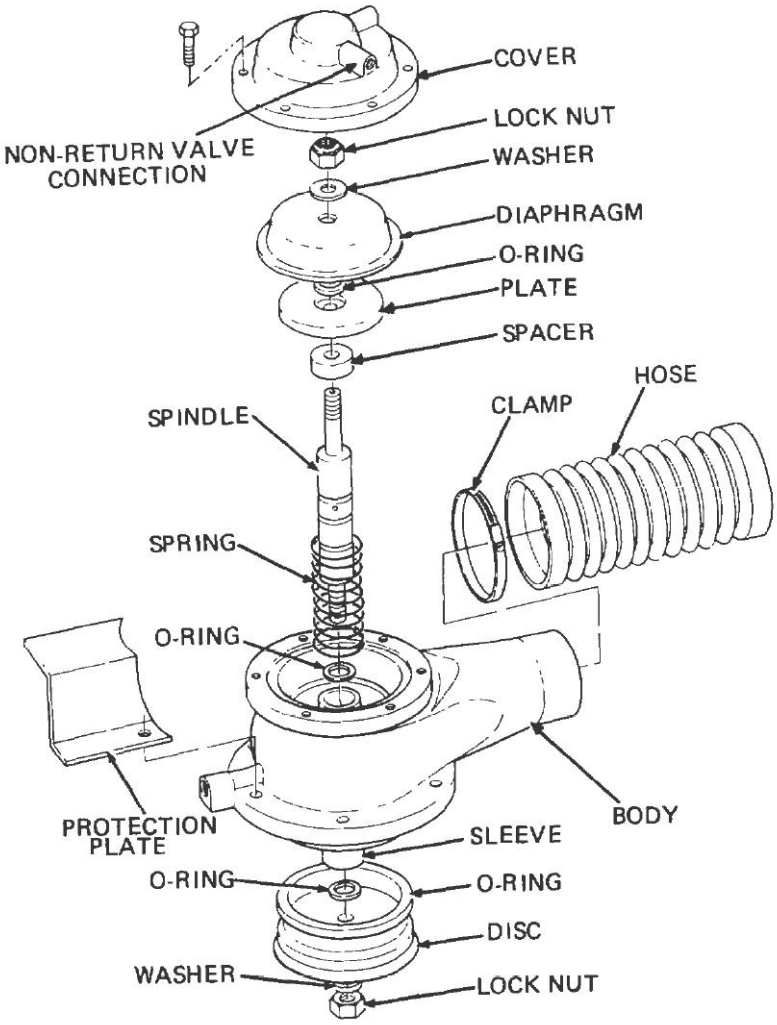

Figure 56 Vapour Transfer Vent – Exploded View

141. Non-return Valve. A non-return valve (Figure 57) is connected to the exhaust port of each vapour transfer vent. Air enters the valve and forces the piston from its seat, allowing air to flow through the valve. In the reverse direction, the air forces the piston against its seal effectively sealing off the valve to airflow.

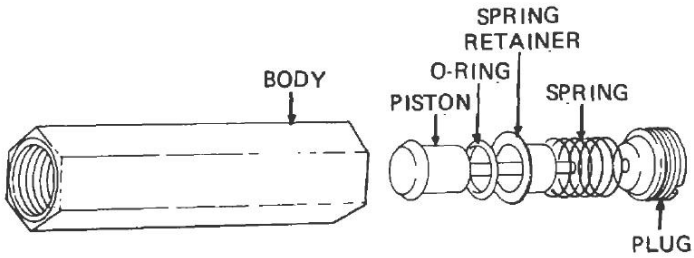

Figure 57 Non-return Valve – Exploded View

142. Level Sensor Valves. Air enters the level sensor valve (Figure 58) via the air connector and forces the piston off its seat. When the air has seeped past the piston and filled the body chamber, the piston spring forces the piston back on its seat, sealing the air inlet. As the fuel level rises, fuel enters the tube compressing the air in the tube which forces the diaphragm off its seat. The air pressure in the body chamber forces the ball valve open and vents into the tank. This drop in internal pressure allows the piston to open and vent the level sensor air inlet line, which results in the corresponding foot valve closing.

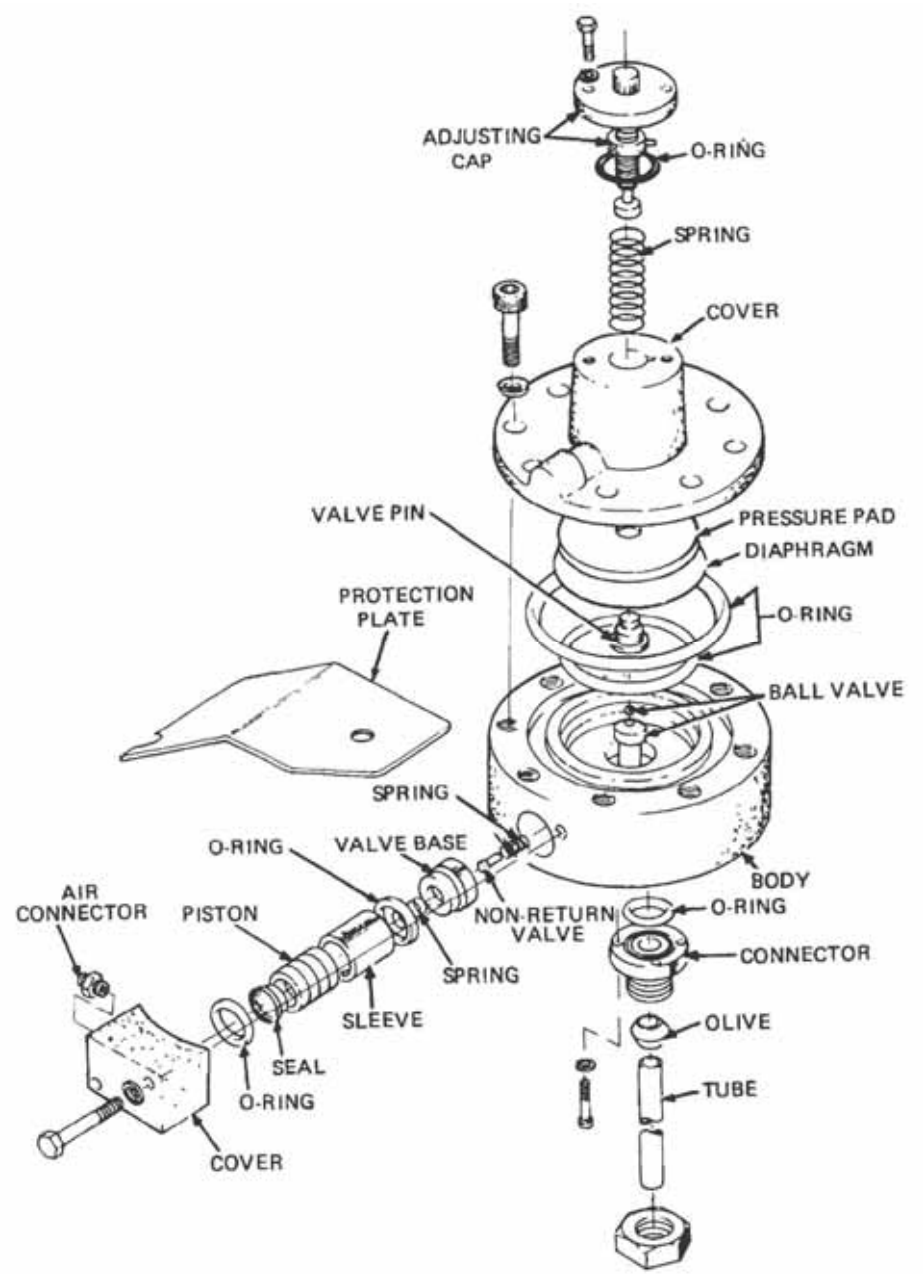

Figure 58 Level Sensor Valve – Exploded View

143. Outlet Gate. The outlet gate is constructed from box section steel and is mounted to brackets on the outlet valves by flange units with seated bearings. While the tanker is in motion the outlet gate is secured by means of a chrome bonnet catch. In the down position, no hoses are able to be connected to the tank outlets and connection to the Scully overfill protection socket is not possible. Raising the outlet gate opens the air circuit so fuel loading can commence and allows hose connection to the tank outlet valves and connection to the Scully overfill detection socket.

144. Inversion Valve. The inversion valve (Figure 59) is used in conjunction with either the parking brake control valve or the outlet gate. Mounted to the spring brake relay valve, the inversion valve is a normally open valve that is closed by using air pressure from the secondary air reservoir. Receiving supply air via either the roller gate valve or the hand operated parking brake control valve, air pressure is applied to the inversion valve piston. The inversion valve piston is raised, opening the supply air outlet and therefore activating the truck parking brake.

145. Closing the outlet gate and the hand control valve removes the supply of air pressure from the inversion valve; spring pressure returns the inversion valve piston to the lowered position and opens the exhaust port thus releasing air line pressure, which releases the truck parking brake.

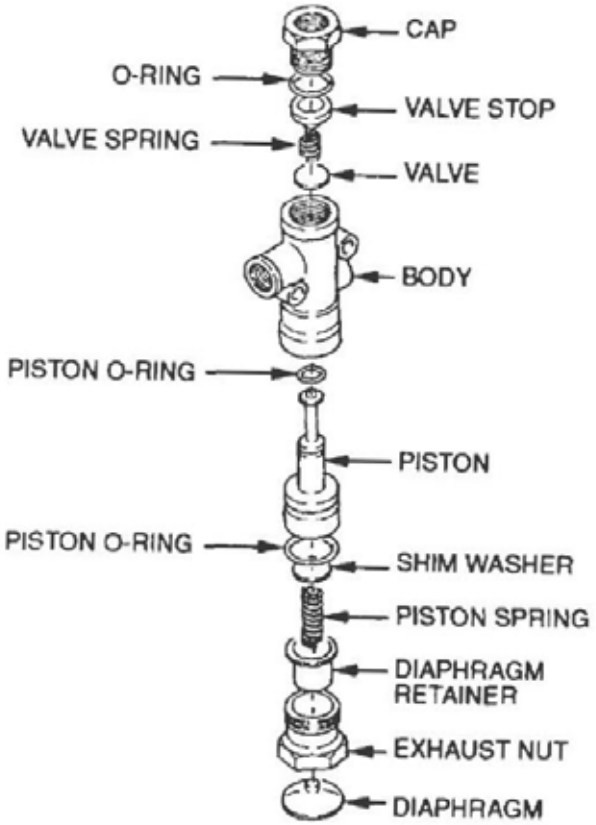

Figure 59 Inversion Valve – Exploded View

146. Clippard Valve. Located inside the Scully overfill detection socket, supply air is halted at this valve until the loading bay's Scully overfill detection plug is attached to the tanker. Once connected the plunger on the valve is depressed and air is directed to the shuttle valve assembly the pilot/spring valves and to the vapour transfer vents.

147. Shuttle Valve Assembly. The shuttle valve assembly consists of three shuttle valves mounted on a single plate and connected in series (Figure 60). The shuttle valve assembly is supplied air pressure from either of two sources, depending on the fuel loading method being employed. Using the Scully overfill detection socket method for bottom-loading, the air is supplied via the Clippard valve. Using either of the other two bottom-loading methods, air is supplied via the control panel. Air is applied to one of the inlet ports; the piston is forced against the plug at the opposite port which directs the air to the outlet port allowing the tank foot valves to open.

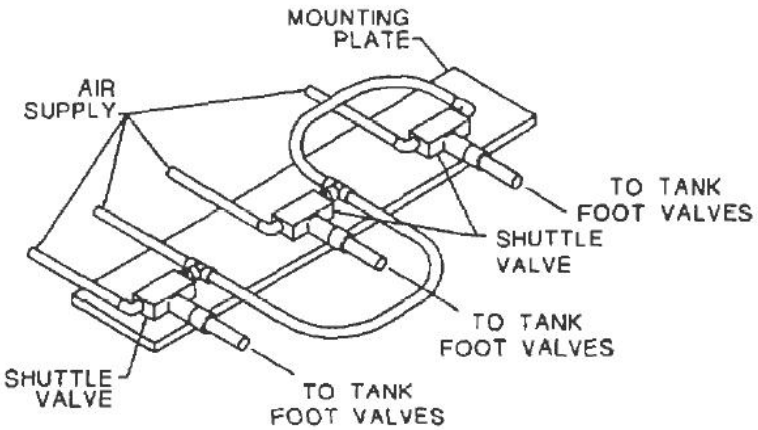

Figure 60 Shuttle Valve Assembly

148. Pilot Spring Valve. Located in the junction box on the tanker walkway, both pilot spring valves have the same operating principles but perform different functions. The pilot/spring valves are only in use when the Scully overfill detection socket is being used:

a. Two Inlets – One Outlet. Air supplied from the Clippard valve to the upper inlet port acts on the pilot/spring valve piston, forcing it to close off the lower inlet port which is supplied by the exhaust air outlet from the tank vapour vents. This prevents closure of the tank vapour vents during loading. On completion of loading the air supply from the Clippard valve is removed when the Scully overfill detection socket is disconnected. Spring pressure within the pilot/spring valve raises the piston, opening the lower port thus allowing air pressure from the tank vapour vents to exhaust through the vent exhaust line.

b. Thee Inlets – Two Outlets. Air supplied from the Clippard valve to the upper inlet port acts on the pilot/spring valve piston which has the following effects:

(1) Opens the Upper Outlet Port. Air pressure energises the brake switch fitted to this port and a signal is sent to the loading bay to commence loading.

(2) Opens the Centre Inlet Port. This allows air pressure from the elbow on the driver's side of number three vapour vent into the pilot/spring valve.

(3) Opens the Lower Outlet Port. This directs the air pressure from number three vapour vent to flow to the control panel. This action closes any valves on the control panel that are open and by that action validates the integrity of the air circuit in use with the Scully overfill detection socket.

Air Circuit

149. Loading Compartment No. 1 without using Scully Overfill Detection Socket. The air circuit to enable tank compartment No. 1 to be loaded is shown (Figure 61). Air is supplied to the hold back valve from the secondary air reservoir. If the air pressure exceeds 550 Kpa (80 psi), the hold back valve opens and the air is applied to port 1 of poppet valve A. With the parking brakes applied, the spring brake release line (port 10, poppet valve A) is exhausted which permits ports 1 and 2 of poppet valve A to be connected due to internal spring pressure. This action permits air to flow to the bottom bank of control valves.

150. Loading Compartment No. 1 using Scully Overfill Detection Socket. The air circuit necessary to enable tank compartment No. 1 to be bottom-loaded using the Scully overfill detection socket method is shown (Figure 62). The action of raising the outlet gate depresses the plunger on the roller gate valve allowing air flow from the secondary air reservoir to the Clippard valve located inside the Scully overfill detection socket and simultaneously to the inversion valve which applies the truck parking brake (if not already applied). Connect the flexible hose from the loading bay delivery source to number one tank outlet valve (API valve).

151. Connecting the Scully overfill detection plug from the loading bay to the Scully overfill detection socket depresses the plunger on the Clippard valve directing air to the shuttle valve assembly, the vapour transfer vents and the pilot/spring valves located in the junction box on the tanker walkway.

152. Air supplied to the shuttle valve assembly opens the tank foot valves. Air supplied to the vapour transfer vents is routed through shuttle valves on the tank vapour vents opening all tank vapour vents sequentially starting with number one. Air supplied to the pilot/spring valve causes the following sequence of events to occur:

a. it prevents closure of the tank vapour vents during loading;

b. it energises the brake switch fitted to the pilot/spring valve which sends a signal via the Scully overfill detection socket to the loading bay to commence loading; and

c. it directs air pressure from number three vapour vent to the control panel. This action closes any valves on the control panel that are open and effectively isolates the control panel air circuit from the loading operation and also validates the integrity of the air circuit in use with the Scully overfill detection socket.

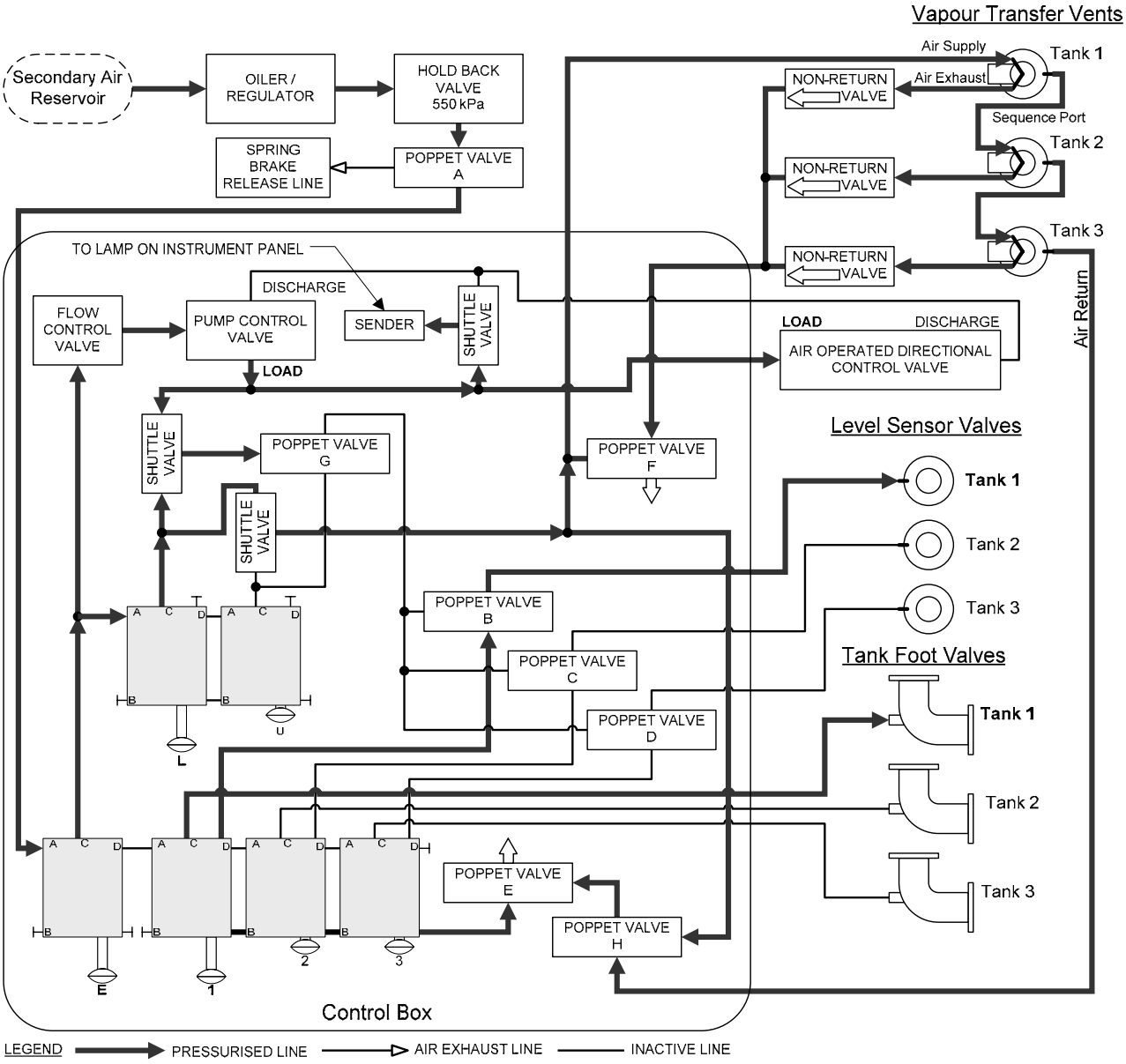

Figure 61 Loading Compartment No 1 without Scully Overfill Detection Socket

153. Loading operations can begin by opening number one tank outlet valve and the external source delivery valve. When the safe fill level is reached an electronic signal is sent to the loading dock via the Scully overfill detection socket and loading is halted. Close number one tank outlet valve and disconnect the Scully overfill detection plug from the Scully overfill detection socket. The Clippard valve plunger is released stopping supply of air pressure to the Scully air circuit and this causes the following sequence of events:

a. the shuttle valve air pressure is exhausted causing the tank foot valves to close;

b. air pressure from the tank vapour vents is exhausted via the pilot/spring valve causing the tank vapour vents to close;

c. the brake switch attached to the pilot/spring valve is de-energised halting the loading signal to the loading bay; and

d. air pressure directed to the control panel via the pilot/spring is removed enabling the control panel air circuit for use in future loading operations.

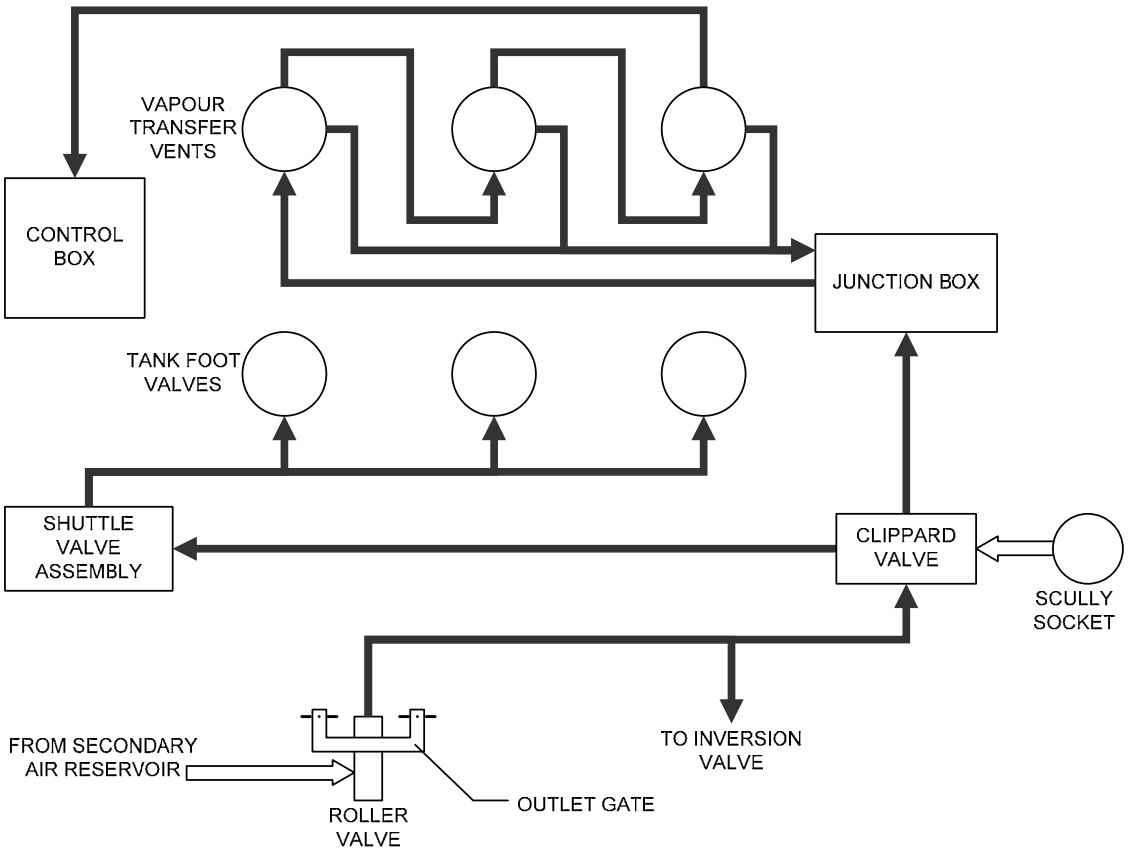

Figure 62 Loading Compartment No 1 using Scully Overfill Detection Socket

154. Discharging Compartment No. 3. The air circuit to enable fuel to be discharged from tank compartment No. 3 is shown (Figure 63). Air is supplied to the hold back valve from the secondary air reservoir. If the air pressure exceeds 550 Kpa (80 psi), the hold back valve opens and the air is applied to port 1 of poppet valve A. With the parking brakes applied, the spring brake release line (port 10, poppet valve A) is exhausted which permits ports 1 and 2 of poppet valve A to be connected due to internal spring pressure. This action permits air to flow to the bottom bank of control valves.

155. Selecting the E button connects the air to the top bank of control valves and the flow control valve, which acts as a regulating valve in the line to the pump control valve. Selecting the U button connects air to port 1 of poppet valve G, and to port 10 of poppet valve F via a shuttle valve. As no air is applied to port 10 of poppet valve G, ports 1 and 2 are connected which applies air to port 10 of poppet valves B, C and D. These valves operate and block the level sensor lines. Poppet valve F is operated by the air applied to port 10, and blocks the air exhaust line. From poppet valve F, the air continues up to the vapour transfer vent of compartment No. 1. The air fills the air exhaust line to poppet valve F (port 1), where it is blocked and then operates the three vapour transfer vents in sequence. The air return line now applies air pressure to port 10 of poppet valve F, which operates, disconnecting port 1 (air in) from port 2 (vent), effectively blocking the line from the control valves. The build-up in pressure in this line holds control valve E in the on position.

156. Selecting button 3 allows air to flow directly to the foot valve for compartment No. 3, as well as to port 1 of poppet valve D. The level sensor for compartment No. 3 will not be activated as the air line has been blocked at poppet valve D. When the pump control lever is moved to the DISCHARGE position, the pump control valve supplies air to the air operated directional control valve, which completes the air circuit for the discharging sequence. The sender unit is also activated to illuminate the pump control engaged lamp on the instrument panel.

157. Closing the U, 3 and E control valves will terminate the discharge sequence by exhausting the air lines through the vents in the poppet valves and control valves.

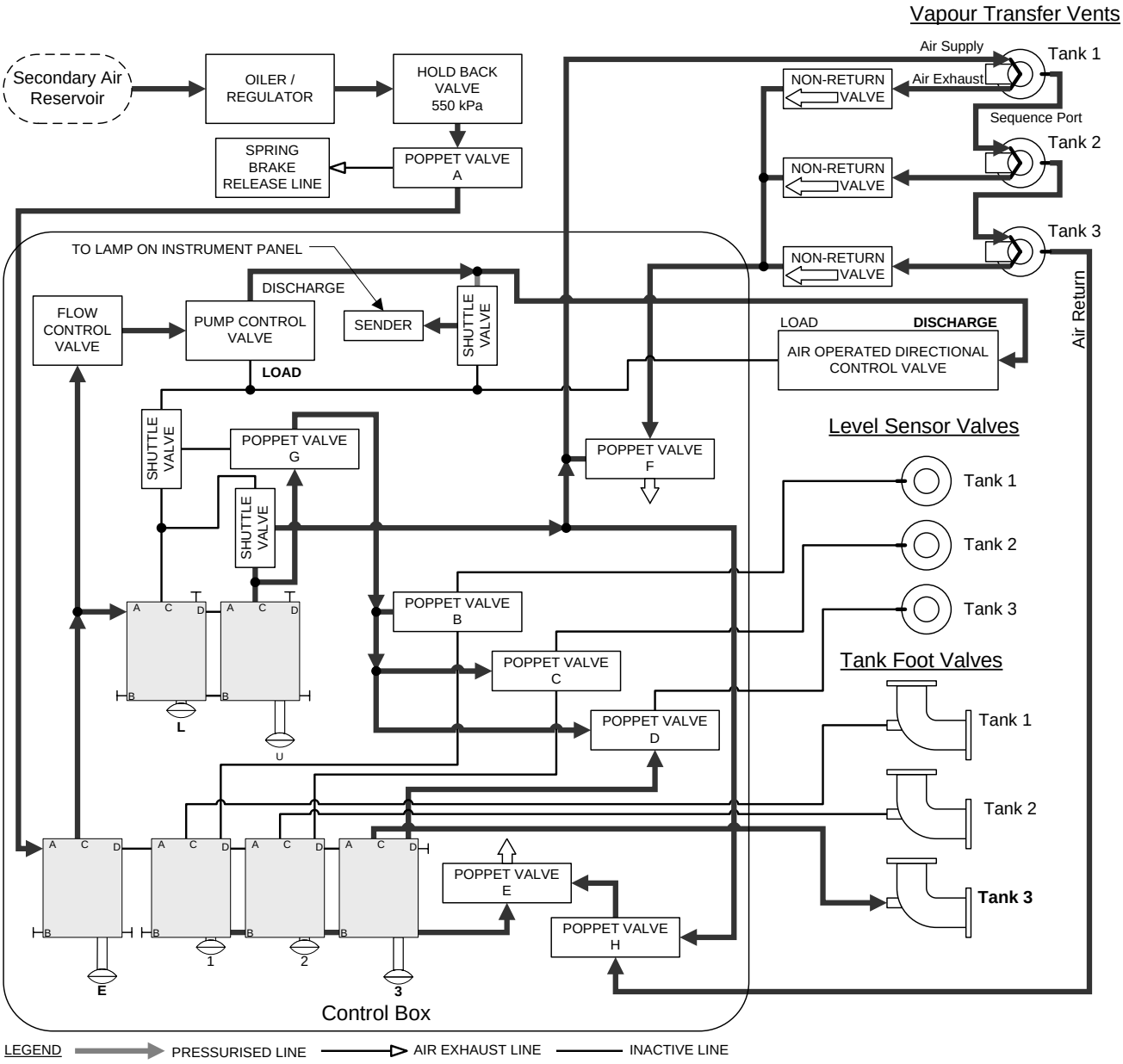

Figure 63 Air Circuit – Discharging Compartment No 3

Emergency Shutdown

158. Engine Strangler. The engine strangler (Figure 11), when activated, closes a butterfly valve thus shutting the air supply to the engine. The strangler can be manually operated by pushing the emergency engine shutdown button under the LHS of the cab or the engine stop on the main control panel at the rear of the product tank. The strangler will also automatically shut if the rollover valve is tripped and it must be manually reset at the valve itself.

159. Engine Dynatard Shutdown. To operate the system, the battery isolation switch must be on, and the EMERGENCY SHUTDOWN (Figure 12) switch pressed. This energises the two Dynatard solenoids which control the Dynatard engine brake.

NOTE

Activation of the engine Dynatard shutdown may not completely shutdown the engine, but it will restrict the engine speed to within safe limits.

TRAM Safety System (if Fitted)

160. The TRAM Safety System (Figure 64) consists of the following components:

a. **TRAM Belt.** The TRAM belt is a purpose designed restraint belt with two lanyards that attach to the TRAM with double action hooks. The belt is fixed around the user's waist using a quick lock and release buckle mechanism and must be fastened when the belt is in use.

b. **TRAM Arm.** The TRAM arm provides a handhold that moves with the user and also supports the attachment rings which are anchor points for the restraint belt.

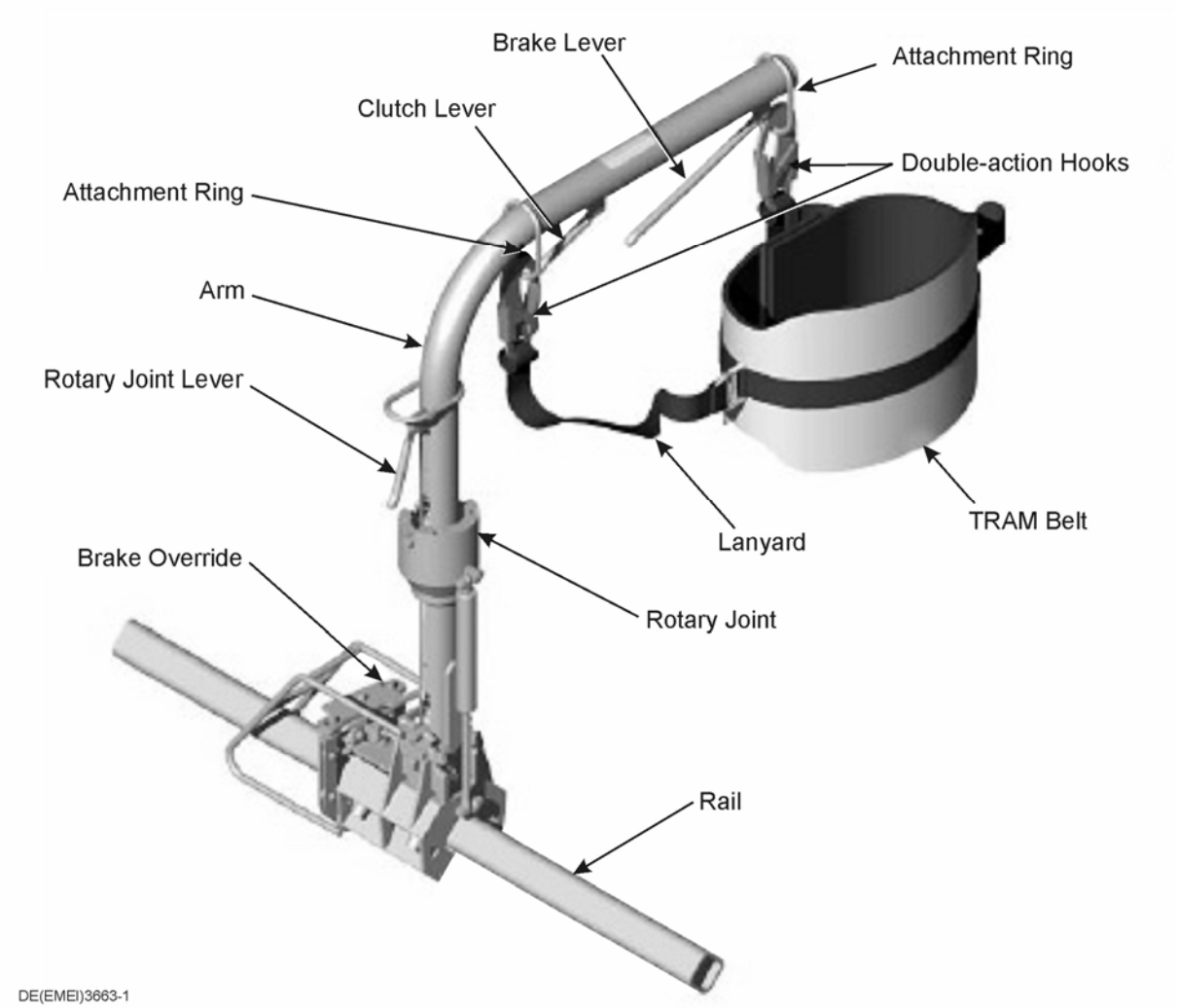

Figure 64 TRAM General Arrangements

c. **Clutch Lever.** The pivoting movement of the TRAM arm is controlled by the clutch lever. Activating the lever allows the user to pivot the TRAM arm between the vertical and horizontal positions. The arm position can be locked into either the horizontal, 45º or the vertical position and will lock in position when the pivot clutch lever is released (Figure 65).

d. **TRAM Trolley.** The TRAM trolley assembly as shown in Figure 66 consists of the trolley casting, eight wheels and the crash guard.

e. **TRAM Brake System.** The TRAM brake system functions in one of two positions, locked or released. The locked is the default position of the brake system and locks the TRAM device in its position on the TRAM rail. The lock mechanism consists of four brake pads mounted on two horizontally opposing brake shoes. The brake shoes are normally closed against the TRAM rail, with the closing force provided by a mechanical coil spring. The brake system is moved into its released position by activating the brake lever. The brake lever is mounted at a convenient position on the TRAM arm and is activated by clasping the lever and pulling it up against the TRAM arm. The lever action pulls a mechanical cable which runs from the brake lever down through the TRAM arm to the

brake mechanism. The end of the mechanical brake cable is attached to the pivoting arms and as the brake cable retracts the arms pivot to extend the mechanical coil spring and open the brake shoes, thus releasing the closing force of the brake pads against the TRAM rail.

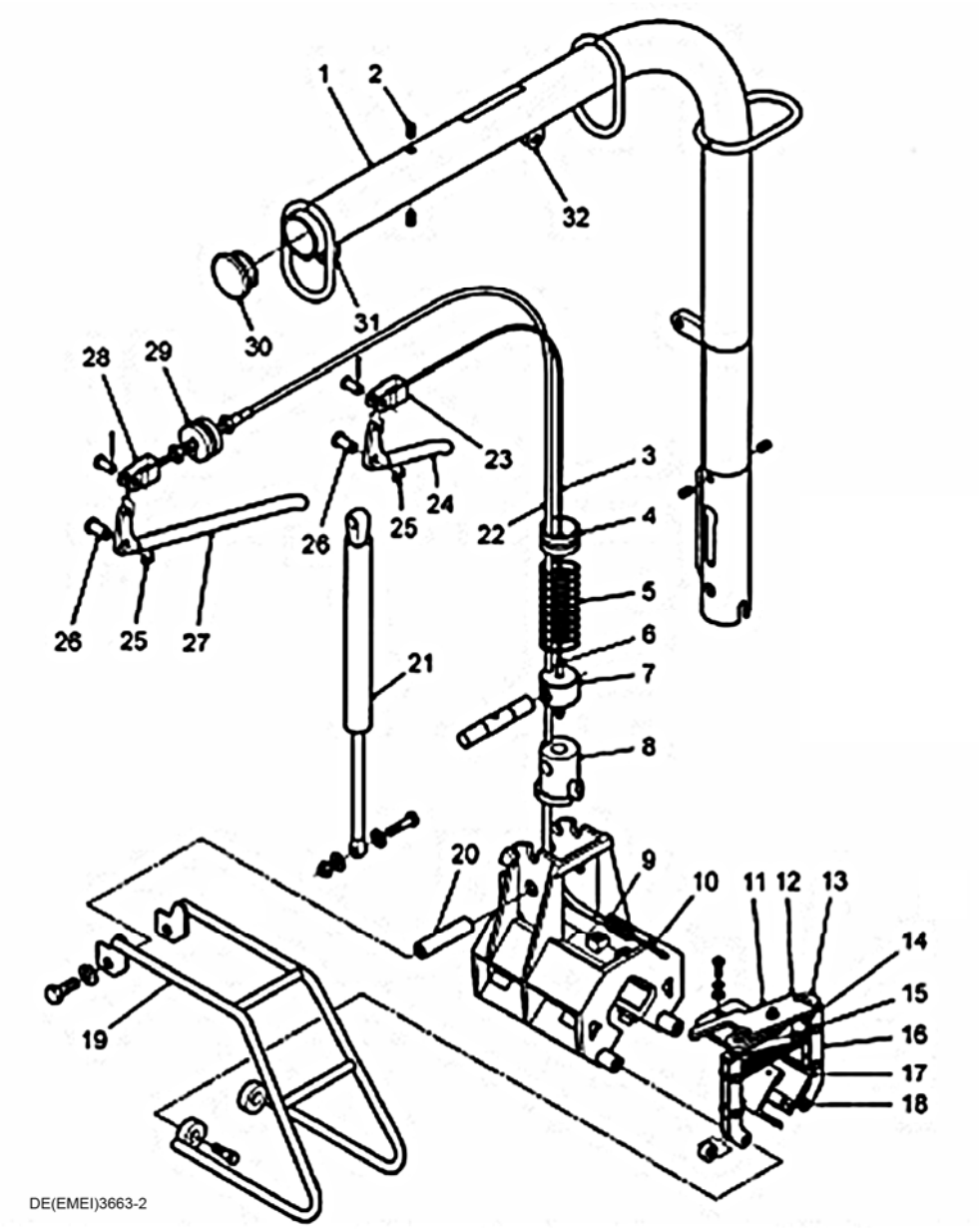

Item	Description	Item	Description	Item	Description	Item	Description
1	TRAM arm	9	M6 (outer) cable end	17	Brake shoe	25	E clip
2	Grub screw	10	M4 (inner) cable end	18	Brake pad	26	Clevis pin
3	Latch cable	11	Tensioning bracket	19	Crash guard	27	Brake lever
4	Latch spacer	12	Brake override foot lever	20	Pivot pin	28	Internal brake clevis assembly
5	Latch spring	13	Brake support bracket	21	Gas spring	29	Upper brake spacer
6	Latch cable end	14	Brake arm	22	Brake cable	30	TRAM arm end cap
7	Pivot pin spacer	15	Brake arm clevis pin	23	Clutch clevis assembly	31	Brake lever mounting lug
8	Lower brake spacer	16	Brake support arm	24	Clutch lever	32	Clutch lever mounting lug

Figure 65 Tram Components

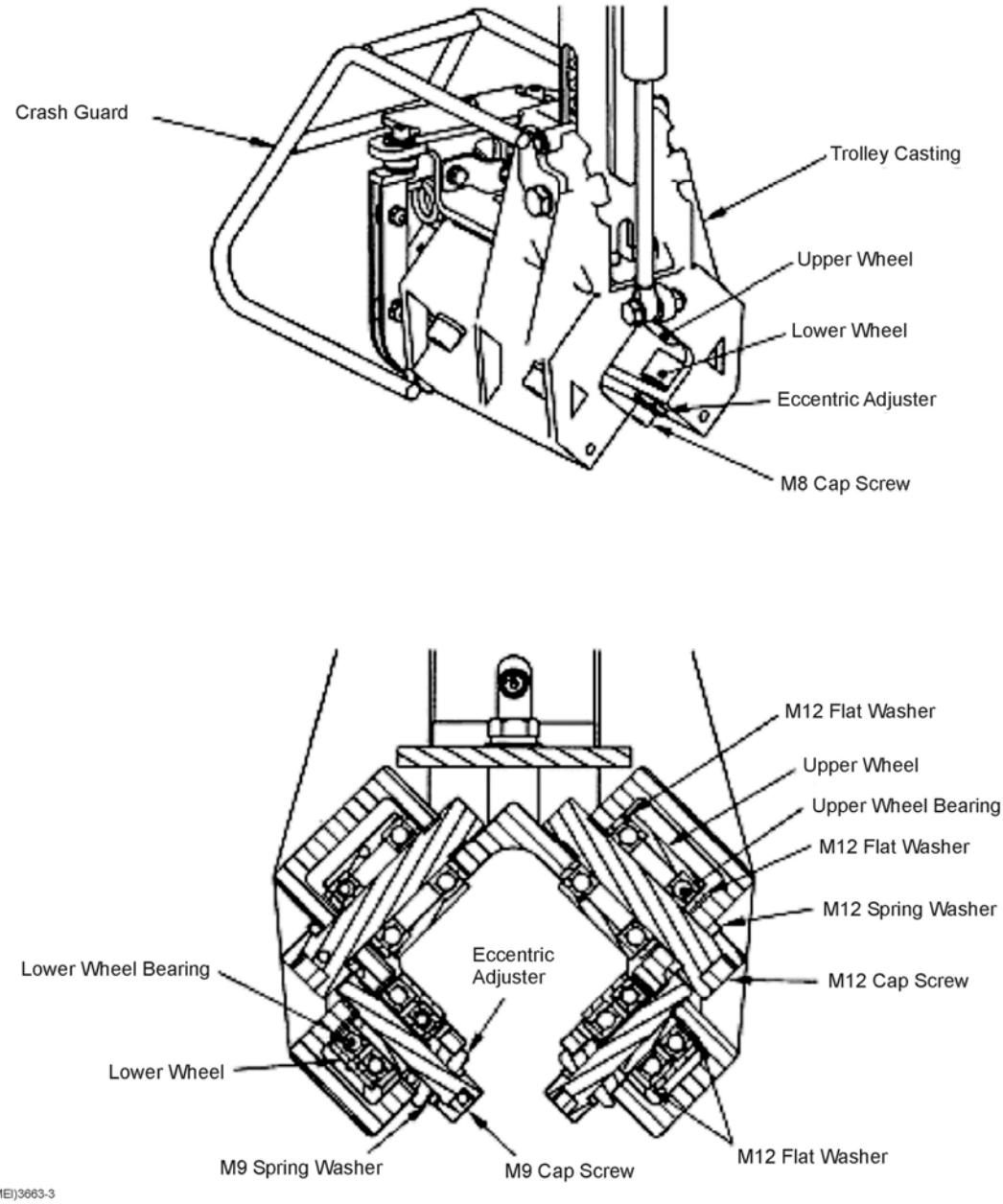

Figure 66 Tram Trolley

TRAM Interlock (if Fitted)

161. The TRAM Interlock system components consist of the following (Figure 67):

- **a.** the 12 V relay;
- **b.** two pressure switches (P/O & P/C);
- **c.** the pressure relief valve;
- **d.** the roller valve;
- **e.** the amber light;
- **f.** the audible alarm; and
- **g.** the airlines.

162. When the operator applies the vehicle park brake and the TRAM Arm is raised, air pressure passes through the roller valve (Figures 18 and 67) to a pressure switch thus activating the amber light on the dash. In the event that the operator returns to the cabin and releases the vehicle park brake and the TRAM Arm is not in the 'laydown' position, air pressure passes through the roller valve to a pressure switch and a dash mounted audible alarm is activated.

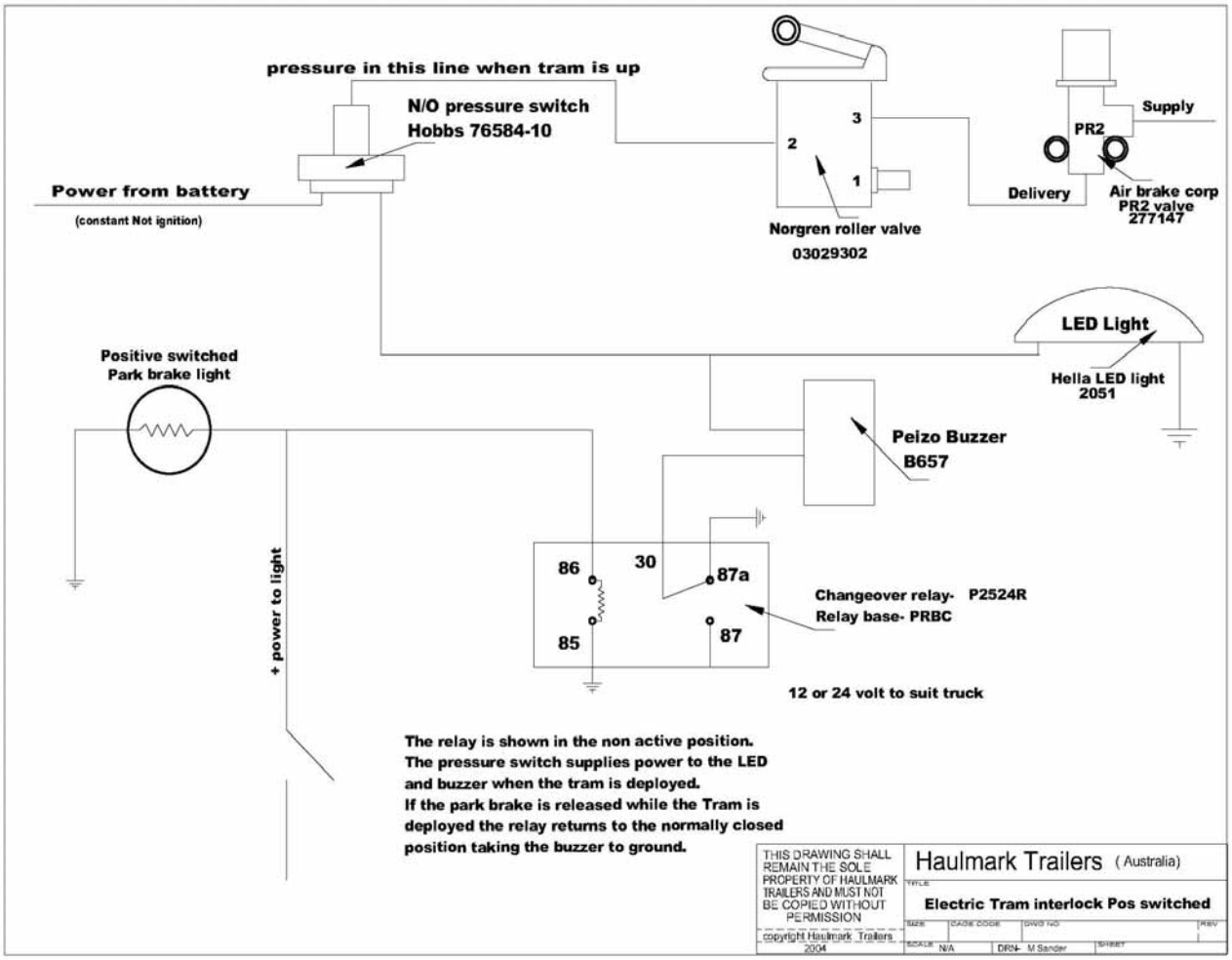

Figure 67 Tram Interlock Wiring Diagram

END

Distribution List: **VEH G 54.0 – Code 1** (Maint Level)
(Sponsor CGSVSPO, Mdm/Hvy B Vehicles)
(Authority: EC-002344)