VEHICLE G 704-1
Issue 1, Dec. 1984

# TRUCK, CARGO, HEAVY, MC3 — MACK
# TRUCK, CARGO, WINCH, HEAVY, MC3 — MACK
# BASE REPAIR

# TRUCK, CARGO, HEAVY, MC3 — MACK
# TRUCK, CARGO, WINCH, HEAVY, MC3 — MACK
# BASE REPAIR

## Introduction

1 This EMEI contains procedures for removing, dismantling, repairing, assembling and installing various components and should be read in conjunction with EMEI VEH G 703 and other associated publications. Where applicable, instructions for the adjustment, lubrication and minor servicing of these items are included.

2 Prevent dirt and foreign objects from entering any component by placing clean temporary covers over all exposed openings, including hoses, tubes and lines.

> *CAUTION:*
> *Do not use adhesive tape to seal fuel or oil openings. The adhesive tape is soluble in fuel or oil and can cause contamination. Remove temporary covers before assembly.*

3 When disconnecting electrical connectors and fittings, remove clamps as required to gain slack and avoid damage to connectors and fittings.

> *CAUTION:*
> *Before removing any electrical system components, disconnect the battery leads.*

4 Discard all used gaskets, seals, cotter pins, tab washers, lock pins, key washers and lock washers. Discard all contaminated fuel and lubricants drained from the trucks.

5 Use only those fuels and lubricants specified in the Servicing Instruction EMEI VEH G.709, the User Handbook and this instruction manual when replenishing fuel or lubricants.

6 Any fastenings of fittings being tightened to prescribed torques are to have dry, clean threads unless otherwise specified. When specified, thread sealants are to be applied to dry, clean, oil free threads.

7 Before removing any pneumatic components from the truck, ensure that the relevant compressed air receivers are exhausted through their respective drain cocks/valves.

> *WARNING:*
> *Compressed air receivers are pressure vessels. Under no circumstances are they to be heated, brazed or welded. A damaged air receiver can explode when pressurized. Lethal injuries can result from such an explosion.*

8 The engine cooling system contains Ethylene Glycol at a concentration of 25% total volume in addition to the additives from the coolant conditioner cartridge. The specific gravity of the mixture is approximately 1.043.

9 When there is a need to drain the cooling system, use a suitable receptacle to collect the coolant mixture being drained. This will facilitate its reuse later and also eliminates the need to renew the conditioner cartridge out of the scheduled service period. Before reusing the coolant mixture, check and if necessary adjust the mixture concentration in accordance with the manufacturer's instructions.

10 The current specification OEP-220 is NOT suitable for MACK assemblies. Only the following oils are to be used where OEP-220 is indicated.

a. OEP-220(MACK GOG) — Note the containers must be clearly labelled with "(MACK GOG)" and;

b. If OEP-220(MACK GOG) is unavailable, the following commercial oils are to be used:

| | | | |
|---|---|---|---|
| AMOCO | Multi-purpose EP | ESSO | GOM 90 |
| AMPOL | Gearlube GO-G | GOLDEN FLEECE | Milgear PD 90 |
| CASTROL | Hypoy GO-G | MOBIL | HD 90 |
| B.P. | Multi Gear FE 80W-140 | SHELL | RJX 90 |
| | | VALVOLINE | HPLS 90 |

| Equipment | Lubricant | Capacity (litres) |
|---|---|---|
| Engine (including filters) | OMD-115 | 55.3 |
| Transmission | OEP-220 | 10.4 |
| Transfer Case | OEP-220 | 9.5 |
| Rear Axles: | | |
| Intermediate | OEP-220 | 12.0 |
| Rear | OEP-220 | 11.2 |
| Front Axle | OEP-220 | 11.4 |
| Spring U-bolts | XG-276 | As required |
| Power Steering | OMD-115 | 7.75 |
| Front Wheel Bearings | OEP-220 | Fill to level plug (2) |
| Chassis Lubrication | XG-274 | As required |
| Winch Gearbox | OEP-220 | 2.5 |

# LIST OF CONTENTS


| | Para No. | Page No. |
|---|---|---|
| INTRODUCTION | | |
| LIST OF CONTENTS | | |
| LIST OF ILLUSTRATIONS | | |
| LIST OF TABLES | | |
| ASSOCIATED PUBLICATIONS | | |
| FRONTISPIECE | | |
| MAJOR UNIT ASSEMBLIES (MUA) IDENTIFICATION | | |
| SPECIAL TOOLS | | |
| **GROUP 1 — ENGINE** | | |
| Cylinder Head | | |
| *Overhaul Procedure* | 1 | 1 |
| *Pressure Test* | 2 | 2 |
| *Machining the Head Surface* | 3 | 3 |
| *Injector Nozzle Sleeve Removal* | 4 | 4 |
| *Injector Nozzle Sleeve Installation* | 5 | 5 |
| *Valve Guide Removal* | 6 | 6 |
| *Installation* | 7 | 7 |
| *Cutting Fire Ring Groove* | 8 | 8 |
| *Valve Seat Insert Replacement* | 9 | 10 |
| *Valve Reconditioning* | 10 | 14 |
| *Installing Valves* | 11 | 14 |
| *Cylinder Head Tapped Hole and Stud Thread Dressing Procedure* | 12 | 15 |
| *Installing Valve Springs* | 13 | 16 |
| Engine Overhaul | | |
| *Disassembly* | 14 | 19 |
| *Reassembly* | 15 | 21 |
| *Cylinder Liners* | 16 | 22 |
| *Oil Spray Nozzles* | 17 | 23 |
| *Camshaft and Bearings* | 18 | 23 |
| *Auxiliary Shaft and Bearings* | 19 | 25 |
| *Crankshaft and Main Bearings* | 20 | 26 |
| *Timing Gears* | 21 | 28 |
| *Rear Main Seal* | 22 | 30 |
| *Flywheel Housing* | 23 | 31 |
| *Flywheel* | 24 | 32 |
| *Pistons and Connecting Rods* | 25 | 33 |
| *Timing Case Cover* | 26 | 37 |
| *Vibration Damper, Hub and Pulley* | 27 | 38 |
| *General Assembly* | 28 | 39 |
| *Engine Break-in Procedure* | 29 | 40 |
| **GROUP 4 — FUEL** | | |
| Fuel Injection Pump Overhaul | | |
| *Disassembly* | 30 | 47 |
| *Cleaning* | 31 | 52 |
| *Inspection* | 32 | 53 |
| *Reassembly* | 33 | 56 |
| *Timing (Internal)* | 34 | 62 |
| Method 1 — Gravity Flow Timing Procedure | 34a | 62 |
| Method 2 — Pressure Timing Procedure | 34b | 64 |
| *Pressure Testing* | 35 | 66 |
| *Calibration — Preliminary Checks* | 36 | 67 |
| *Preparations and Run-in* | 37 | 67 |
| *Calibration Procedure* | 38 | 68 |
| *Fuel Injectors* | 39 | 73 |
| *Cleaning* | 41 | 74 |
| *Inspection* | 42 | 75 |
| *Reassembly* | 43 | 76 |
| *Installation* | 44 | 76 |
| Governor | | |
| *Disassembly* | 45 | 77 |
| *Inspection* | 46 | 78 |
| *Reassembly* | 47 | 78 |
| *Fuel Injection Pump Modifications* | 48 | 80 |
| *Standard Regulation Governors (On-Engine Repair)* | 49 | 81 |

| | Para No. | Page No. |
|---|---|---|
| Turbocharger | | |
| *Disassembly* | 50 | 82 |
| Turbocharger Cleaning | 51 | 85 |
| Detail Parts Inspection | 56 | 87 |
| *Compressor Housing* | 57 | 87 |
| *Compressor Wheel* | 58 | 88 |
| *Turbine Wheel Assembly* | 59 | 89 |
| *Wheel Shroud* | 60 | 90 |
| *Backplate or Thrust Plate Assembly* | 61 | 90 |
| *Thrust Collar* | 62 | 90 |
| *Thrust Spacer* | 63 | 90 |
| *Centre Housing* | 64 | 90 |
| *Turbine Housing* | 65 | 90 |
| *Nozzle or Diffuser* | 66 | 91 |
| Repair and Replacement | 67 | 91 |
| *Reassembly* | 68 | 91 |
| **GROUP 5 — CLUTCH** | | |
| Clutch Assembly Overhaul | | |
| *Disassembly* | 69 | 97 |
| Detail Parts Inspection | 70 | 100 |
| *Clutch Plates* | 71 | 100 |
| *Clutch Housing* | 72 | 100 |
| *Adjusting Ring* | 73 | 100 |
| *Pressure and Intermediate Plates* | 74 | 100 |
| *Release Levers* | 75 | 100 |
| *Release Sleeve Retainer* | 76 | 101 |
| *Spring Pivots* | 77 | 101 |
| *Release Bearing and Sleeve Assembly* | 78 | 101 |
| *Reassembly* | 79 | 101 |
| *Installation and Storage* | 80 | 103 |
| FAULT FINDING | | 105 |
| **GROUP 6 — TRANSMISSION** | | |
| Transmission Overhaul | 81 | 107 |
| *Dismantling of Sub-Assemblies* | | |
| *Main Drive Pinion* | 82 | 112 |
| *Mainshaft* | 83 | 112 |
| *Rear Case* | 84 | 112 |
| *Rear Countershafts* | 85 | 113 |
| *Front Countershafts* | 86 | 113 |
| *Inspection* | 87 | 114 |
| *Reassembly of Sub-Assemblies* | 88 | 114 |
| *Main Drive Pinion* | 89 | 114 |
| *Mainshaft* | 90 | 115 |
| *Rear Case* | 91 | 115 |
| *Rear Countershafts* | 92 | 117 |
| *Front Countershafts* | 93 | 117 |
| *Main Components* | 94 | 118 |
| FAULT FINDING | | 127 |
| **GROUP 7 — TRANSFER CASE** | | |
| Transfer Case Overhaul | 95 | 129 |
| *Dismantling of Sub-Assemblies* | | |
| *Mainshaft* | 96 | 137 |
| *Countershaft* | 97 | 137 |
| *Main Drive Shaft* | 98 | 138 |
| *Front Output Shaft* | 99 | 138 |
| *Rear Drive Shaft* | 100 | 138 |
| *Front Drive Shaft Bearing Retaining* | 101 | 138 |
| *Inspection* | 102 | 138 |
| *Reassembly of Sub-Assemblies* | 103 | 138 |
| *Mainshaft* | 104 | 138 |
| *Countershaft* | 105 | 139 |
| *Main Drive Shaft* | 106 | 139 |
| *Front Output Shaft* | 107 | 139 |
| *Rear Drive Shaft* | 108 | 139 |
| *Front Drive Shaft Bearing Retainer* | 109 | 140 |
| *Main Components* | 110 | 140 |

| | Para No. | Page No. |
|---|---|---|
| **GROUP 9 — REAR AXLE** | | |
| Differential Overhaul | 111 | 151 |
| *Overhaul Procedures* | 112 | 151 |
| *Bevel Pinion Shaft Assembly (Intermediate Carrier)* | 113 | 152 |
| *Bevel Pinion Shaft Assembly (Rear Carrier)* | 114 | 155 |
| *Helical Pinion Shaft* | 115 | 157 |
| *Inter-Wheel Power Divider Differential* | 116 | 160 |
| *Inter-Axle Power Divider Cage* | 117 | 162 |
| *Cleaning* | 118 | 164 |
| *Inspection* | 119 | 164 |
| *Pinion Shaft Wear Limits* | 120 | 164 |
| *Gear Wear Limits* | 121 | 164 |
| *Bearings and Bushes* | 122 | 165 |
| *Power Divider* | 123 | 165 |
| *Axle Shafts* | 124 | 165 |
| *Reassembly* | 125 | 165 |
| *Bevel Pinion Shaft Assembly (Intermediate Carrier)* | 126 | 165 |
| *Bevel Pinion Shaft Assembly (Rear Carrier)* | 127 | 168 |
| *Helical Pinion Shaft* | 128 | 170 |
| *Setting the Spiral Bevel Gears* | 129 | 177 |
| *Inter-Wheel Power Divider Differential* | 130 | 178 |
| *Helical Pinion Shaft Retainer Cover* | 131 | 183 |
| *Bevel Pinion Assembly* | 132 | 183 |
| *Inter-Axle Power Divider* | 133 | 184 |
| *Inter-Axle Through Shaft* | 134 | 185 |
| *Final Assembly* | 135 | 186 |
| Bogie Axle Assembly | | |
| *Removal* | 136 | 186 |
| *Installation* | 137 | 186 |
| **GROUP 10 — FRONT AXLE** | | |
| Front Differential Overhaul | | |
| *Disassembly* | 138 | 187 |
| *Inpection* | 139 | 190 |
| Reassembly of Sub-Assemblies | | |
| *Pinion Shaft Assembly and Pre-load* | 140 | 190 |
| *Differential and Crownwheel Assembly Pre-load and Backlash* | 141 | 192 |
| *Tooth Contact Pattern* | 143 | 195 |
| *Installation and Storage* | 143 | 197 |
| Steerable Drive End | | |
| *Disassembly* | 144 | 197 |
| *Inspection* | 145 | 199 |
| Reassembly | | |
| *General Precautions for Reassembly* | 146 | 199 |
| Kingpin Adjustment | 147 | 203 |
| **GROUP 12 — BRAKE SYSTEM** | | |
| Air Compressor Overhaul | | |
| *Disassembly* | 148 | 205 |
| *Reassembly* | 149 | 206 |
| FAULT FINDING | | 208 |
| **GROUP 15 — ELECTICAL** | | |
| Generator Overhaul | 150 | 211 |
| *Stator Assembly* | 151 | 211 |
| *Regulator* | 152 | 211 |
| Wiring Harness | | |
| *General Precautions* | 153 | 212 |
| *Engine Wiring Harness — Replacement* | 154 | 212 |
| *Main Wiring Harness — Replacement* | 155 | 213 |
| *Rear Wiring Harness — Replacement* | 156 | 213 |
| **GROUP 17 — BODY** | | |
| Cargo Body | | |
| *Removal* | 157 | 215 |
| *Installation* | 158 | 215 |
| Cabin | | |
| *Removal* | 159 | 215 |
| *Installation* | 160 | 216 |

| | Para No. | Page No. |
|---|---|---|
| **GROUP 19 — WINCH** | | |
| Winch Overhaul | | |
| *Disassembly* | 161 | 217 |
| *Inspection* | 162 | 218 |
| *Reassembly* | 163 | 218 |
| Torque Limiter | | |
| *Removal* | 164 | 219 |
| *Disassembly* | 165 | 219 |
| *Inspection* | 166 | 220 |
| *Reassembly* | 167 | 220 |
| *Re-setting the Triggering Torque* | 168 | 220 |
| *Installation* | 169 | 220 |
| Torque Limiter Support Bearing Assembly | | |
| *Removal* | 170 | 220 |
| *Disassembly* | 171 | 221 |
| *Reassembly* | 172 | 221 |
| Power Take-Off Overhaul | | |
| Adapter | | |
| *Removal* | 173 | 222 |
| *Disassembly* | 174 | 222 |
| *Inspection* | 175 | 223 |
| *Reassembly* | 176 | 224 |
| *Installation* | 177 | 224 |
| Power Take-Off (PTO) | | |
| *Removal* | 178 | 225 |
| *Disassembly* | 179 | 226 |
| *Inspection* | 180 | 228 |
| *Reassembly* | 181 | 228 |
| *Installation* | 182 | 230 |

# LIST OF ILLUSTRATIONS


| Fig. | Title | Page No. |
|---|---|---|
| 1 | Truck — 3/4 Views | |
| 2 | Special Tools | |
| | **GROUP 1 — ENGINE** | |
| 3 | Removing Valve Spring Collets | 1 |
| 4 | Measuring Cylinder Head | 1 |
| 5 | Attaching Blanking-off Plate | 2 |
| 6 | Pressure Testing Cylinder Head | 2 |
| 7 | De-burring Head Surface | 3 |
| 8 | Machining Head | 3 |
| 9 | Measuring Cylinder Head | 3 |
| 10 | Cutting Threads into Nozzle Sleeve | 4 |
| 11 | Removing Nozzle Sleeve | 4 |
| 12 | Applying Anti-Seize to the Nozzle Sleeve | 5 |
| 13 | Installing Tool J-21374 | 5 |
| 14 | Driving Sleeve into Head | 5 |
| 15 | Levelling Cylinder Head | 6 |
| 16 | Reaming Sleeves | 6 |
| 17 | Installing Tool J-25260 | 6 |
| 18 | Removing Valve Guides | 7 |
| 19 | Oiling New Valve Guides | 7 |
| 20 | Installing New Valve Guides | 7 |
| 21 | Reaming Valve Guides | 8 |
| 22 | Measuring Guide Extension | 8 |
| 23 | Setting Cutting Depth | 8 |
| 24 | Installing Cutting Tool | 9 |
| 25 | Cutting Fire Ring Groove | 9 |
| 26 | De-burring Fire Ring Groove | 9 |
| 27 | Removing Valve Seat Inserts | 10 |
| 28 | Installing Cutting Tool Pilot | 10 |
| 29 | Installing Sleeve over Pilot | 10 |
| 30 | Installing Counterbore Cutter | 11 |
| 31 | Installing Sleeve Assembly | 11 |
| 32 | Installing Core | 11 |
| 33 | Lowering Sleeve Assembly | 12 |
| 34 | Cutting Counterbore | 12 |
| 35 | Installing Valve Seat Inserts | 12 |
| 36 | Staking Inserts | 13 |
| 37 | Grinding Inserts | 13 |
| 38 | Checking Valve Seat Run-out | 13 |
| 39 | Zeroing Depth Gauge | 14 |
| 40 | Measuring Valve Head to Deck Clearance | 14 |
| 41 | Installing Vacuum Test Line | 15 |
| 42 | Applying Lapping Compound | 15 |
| 43 | Lapping-in Valves | 15 |
| 44 | Checking Injector Nozzle Sleeves | 16 |
| 45 | Checking Stud Threads | 16 |
| 46 | Dressing Threaded Holes | 16 |
| 47 | Installing Valve Springs | 17 |
| 48 | Installing Valve Rotators | 17 |
| 49 | Installing Valve Collets | 17 |
| 50 | Measuring Valve Sealing | 18 |
| 51 | Injection Pump Drive Shaft Key Location | 19 |
| 52 | Auxiliary Shaft Key Location | 19 |
| 53 | Removing Rear Main Seal Housing | 20 |
| 54 | Removing Oil Spray Nozzles | 20 |
| 55 | Removing Cylinder Liners | 21 |
| 56 | Cylinder Liner and Piston Relationship to Block | 22 |
| 57 | Securing Liners | 22 |
| 58 | Aligning Oil Spray Nozzles | 23 |
| 59 | Camshaft Bearings — Installation Distances | 24 |

| Fig. | Title | Page No. |
|---|---|---|
| 60 | Camshaft Bearings — Oil Hole Alignment | 24 |
| 61 | Installing Camshaft Bearings | 25 |
| 62 | Marking Rear Bearing | 25 |
| 63 | Oil Hole Alignment | 26 |
| 64 | Installing Drive Coupling | 26 |
| 65 | Positioning Plastigauge | 27 |
| 66 | Main Bearing Caps — Tie Plates | 28 |
| 67 | Installing Injection Pump Drive Gear | 28 |
| 68 | Fitting Pump Drive Shaft Housing | 28 |
| 69 | Timing Marks | 29 |
| 70 | Backlash Measurements | 29 |
| 71 | Aligning the Seal Housing | 30 |
| 72 | Installation Tool Assembly J-21384-02 | 30 |
| 73 | Installing Rear Main Seal | 31 |
| 74 | Measuring Flywheel Housing Concentricity | 31 |
| 75 | Pre-loading Flywheel Housing | 32 |
| 76 | Packing Grease Cavity | 33 |
| 77 | Measuring Piston | 33 |
| 78 | Side Clearance Measurements — Keystone Rings | 34 |
| 79 | Side Clearance Measurements — Rectangular Rings | 34 |
| 80 | Offsetting Piston and Connecting Rod | 35 |
| 81 | Positioning Connecting Rod over Crankpin | 35 |
| 82 | Aligning Big-end Caps | 36 |
| 83 | GO NO-GO Gauge | 36 |
| 84 | Checking Oil-spray Nozzle Clearance | 37 |
| 85 | Measuring Piston Extension (Bump Clearance) | 37 |
| 86 | Installing Front Main Seal | 37 |
| 87 | Installing Thrust Buttons | 38 |
| 88 | Aligning Timing Case Cover | 38 |
| 89 | Vibration Damper, Hub and Pulley | 39 |
| | **GROUP 4 — FUEL** | |
| 90 | Exploded View of Injection Pump | 47 |
| 91 | Pump Mounted in Vice | 48 |
| 92 | Removing Friction Clutch Assembly | 48 |
| 93 | Installing Service Pins | 49 |
| 94 | Removing Camshaft | 49 |
| 95 | Driving Out Base Closure Plugs | 50 |
| 96 | Compressing Tappet Spring | 50 |
| 97 | Removing Tappet | 51 |
| 98 | Removing Plunger | 51 |
| 99 | Removing Delivery Valve Body | 52 |
| 100 | Assembling Shutoff Shaft | 57 |
| 101 | Reaming Bushings | 57 |
| 102 | Installing Delivery Valve | 58 |
| 103 | Assembling Segments | 58 |
| 104 | Installing Plunger | 59 |
| 105 | Installing Tappet | 59 |
| 106 | Compressing Plunger Spring | 60 |
| 107 | Installing Camshaft | 60 |
| 108 | Checking Camshaft Runout | 61 |
| 109 | Checking Camshaft End Play | 61 |
| 110 | Removing Service Pin | 62 |
| 111 | Mounting Pump on Test Stand | 63 |
| 112 | Dial Indicator on Tappet | 64 |
| 113 | Pressure Timing Set-up | 65 |
| 114 | Cam Nose/Stop Plate Relationship at Full Speed RPM | 68 |
| 115 | Adjusting Segments | 68 |
| 116 | Cam Nose/Stop Plate Relationship at Stop Plate Vertical Set Point | 69 |
| 117 | Droop Screw/Stop Plate Relationship at a Set Point | 69 |
| 118 | Installing "PLE" Gauge | 70 |
| 119 | Setting "PLE" Gauge | 70 |
| 120 | Determining "PLE" Dimension | 70 |

| Fig. | Title | Page No. |
|---|---|---|
| 121 | "PLE" Stamping | 71 |
| 122 | Low Idle Set Point | 71 |
| 123 | Footed Pin Touching Upper Vertical Face of the Stop Plate | 72 |
| 124 | Measuring Distance to Determine "K" Dimension | 72 |
| 125 | "K" Dimension Stamped on Governor Housing | 72 |
| 126 | Disassembly Jig | 74 |
| 127 | Cleaning Nozzle Body Fuel Discharge Holes | 74 |
| 128 | Method of Checking Nozzle Valve Lift | 75 |
| 129 | Exploded Views of GVB/E 6881 Governor | 77 |
| 130 | Positioning Shims | 78 |
| 131 | Positioning Weight Pin Lubricating Groove | 79 |
| 132 | Checking Governor Inner Spring Clearance | 80 |
| 133 | Checking Governor Outer Spring Clearance | 80 |
| 134 | Fulcrum Lever Variations | 80 |
| 135 | Lettering Governor Nameplate | 81 |
| 136 | Turbocharger Assembly — Exploded View | 82 |
| 137 | Turbine Wheel Holding Fixture | 83 |
| 138 | Removing Turbine Wheel | 83 |
| 139 | Removing Backplate | 84 |
| 140 | Remove Thrust Spacer | 84 |
| 141 | Removing O-ring | 84 |
| 142 | Removing Internal Components | 85 |
| 143 | Masking Turbine Wheel Shaft | 86 |
| 144 | Compressor Wheel Balance Plains and Stock Removal Limits | 88 |
| 145 | Turbine Wheel Assembly | 89 |
| 146 | Turbine Wheel Assembly Balance Plains and Stock Removal Limits | 89 |
| 147 | Identifying Nameplates | 91 |
| 148 | Etching Marks — Undersize Journals | 92 |
| 149 | Etching Marks — Oversize Bearing | 92 |
| 150 | Installing Turbine End Outboard Circlip | 93 |
| 151 | Installing Internal Components | 94 |
| 152 | Installing Thrust Bearing and Thrust Collar | 94 |
| 153 | Installing O-ring | 94 |
| 154 | Installing Wheel Shroud | 95 |
| 155 | Installing Piston Ring | 95 |
| 156 | Rotating Wheel Shroud | 95 |
| 157 | Installing Thrust Spacer | 96 |
| | **GROUP 5 — CLUTCH** | |
| 158 | Clutch Assembly | 97 |
| 159 | Lock-tab Removal | 97 |
| 160 | Pressure Plate Return Springs | 98 |
| 161 | Adjusting Ring and Lever Assembly | 98 |
| 162 | Removing Snap-ring | 99 |
| 163 | Removing Half-ring Locking Washers | 99 |
| 164 | Remaining Clutch Life | 100 |
| 165 | Installing Half-ring Locking Washers | 101 |
| 166 | Setting Adjusting Ring | 102 |
| 167 | Snap-ring Installation | 102 |
| 168 | Lock Tab Installation | 103 |
| 169 | Pressure Plate Return Springs | 103 |
| | **GROUP 6 — TRANSMISSION** | |
| 170 | Removing Detent Ball Cover | 107 |
| 171 | Removing Selectors, Selector Forks and Shafts | 107 |
| 172 | Removing Second/Third Selector Shaft Expansion Plug | 108 |
| 173 | Removing Main Driving Pinion Bearing Cover | 108 |
| 174 | Removing Main Drive Pinion | 109 |
| 175 | Removing Fourth/Fifth Gear Sliding Clutch | 109 |
| 176 | Removing Retaining Snap Ring | 109 |
| 177 | Removing Selective Thrust Washer | 109 |
| 178 | Removing Mainshaft | 110 |
| 179 | Removing Fourth Gear | 110 |
| 180 | Removing Thrust Washer Retaining Snap Ring | 111 |

| Fig. | Title | Page No. |
|---|---|---|
| 181 | Removing First Gear Sliding Clutch | 111 |
| 182 | Removing First Gear | 111 |
| 183 | Removing Front Countershafts | 111 |
| 184 | Removing Spirolox Snap Ring | 112 |
| 185 | Removing Expansion Plugs | 112 |
| 186 | Installing Removal Tool | 113 |
| 187 | Removing Idler Gear, Thrust Washers and Bearing | 113 |
| 188 | Installing Pinion Bearing | 114 |
| 189 | Installing the Spirolox Snap Ring | 115 |
| 190 | Aligning Reverse Idler Shaft | 115 |
| 191 | Installing Reverse Idler Gear Assembly | 116 |
| 192 | Applying Sealer Compound | 116 |
| 193 | Exploded View of Front Countershaft Assembly | 117 |
| 194 | Installing Countershaft Assemblies | 118 |
| 195 | Installing Mainshaft Third Gear | 118 |
| 196 | Installing Second/Third Gear Sliding Clutch | 119 |
| 197 | Positioning Thrust Washer on Second Gear | 119 |
| 198 | Installing Second Gear | 119 |
| 199 | Installing First Gear | 120 |
| 200 | Installing First Gear Sliding Clutch | 129 |
| 201 | Installing Thrust Washers | 120 |
| 202 | Positioning Rear Case Assembly | 121 |
| 203 | Installing Rear Countershafts | 121 |
| 204 | Installing PTO Gear | 122 |
| 205 | Aligning Timing "O" Marks | 122 |
| 206 | Installing Fourth Gear | 122 |
| 207 | Installing Mainshaft | 123 |
| 208 | Installing Fourth Gear Selective Thrust Washer | 123 |
| 209 | Checking End Play | 124 |
| 210 | Installing Fourth/Fifth Gear Sliding Clutch | 124 |
| 211 | Installing Main Drive Pinion | 124 |
| 212 | Installing First and Reverse Selector Forks | 125 |
| 213 | Installing Second/Third Gear Selector and Selector Fork | 125 |
| 214 | Installing Fourth/Fifth Gear Selector Fork | 126 |
| 215 | Installing Detent Ball Cover | 126 |
| | **GROUP 7 — TRANSFER CASE** | |
| 216 | Drive Yoke Puller | 129 |
| 217 | Removing Bearing Cover Assembly | 129 |
| 218 | Removing Front Drive Shaft Bearing Cover | 129 |
| 219 | Removing Drive Housing End Plate | 130 |
| 220 | Removing Front Output Shaft Assembly | 130 |
| 221 | Removing Inner Bearing Cone and Bearing Spacer | 130 |
| 222 | Removing Front Drive Gear | 131 |
| 223 | Removing Front Drive Selector Assembly | 131 |
| 224 | Removing Sliding Clutch | 131 |
| 225 | Removing Front Drive Housing | 132 |
| 226 | Removing Retainer Assembly | 132 |
| 227 | Removing Countershaft Rear Bearing Cover | 132 |
| 228 | Removing Rear End Plate | 133 |
| 229 | Removing Planetary Gears | 133 |
| 230 | Removing Planet Gear | 133 |
| 231 | Removing Front Drive Shaft | 134 |
| 232 | Removing Mainshaft Assembly | 134 |
| 233 | Removing the Detent Ball and Spring | 134 |
| 234 | Removing Selector Shaft | 135 |
| 235 | Removing Selector Fork | 135 |
| 236 | Removing Countershaft Assembly | 135 |
| 237 | Removing Front Bearing Cover | 136 |
| 238 | Removing Bearing and Bearing Spacer | 136 |
| 239 | Removing Drive Shaft Assembly | 136 |
| 240 | Removing Bearing Retainer | 137 |
| 241 | Removing Drive Shaft Gear | 137 |

| Fig. | Title | Page No. |
|---|---|---|
| 242 | Measuring End Play — Rear Drive Shaft | 139 |
| 243 | Measuring End Play — Front Drive Shaft | 140 |
| 244 | Measuring End Play — Drive Shaft | 140 |
| 245 | Installing Mainshaft and Countershaft Bearing Cover | 141 |
| 246 | Installing Countershaft Assembly | 141 |
| 247 | Installing Hi-Lo Range Selector Fork | 142 |
| 248 | Installing Selector Shaft | 142 |
| 249 | Installing Detent Ball | 142 |
| 250 | Installing Mainshaft Assembly | 143 |
| 251 | Installing Front Drive Shaft | 143 |
| 252 | Installing Planetary Gears | 143 |
| 253 | Installing End-Plate | 144 |
| 254 | Installing Countershaft Rear Bearing Cover | 144 |
| 255 | Installing Rear Drive Shaft Cover Assembly | 145 |
| 256 | Measuring Mainshaft Bearing End-Play | 145 |
| 257 | Installing Front Drive Housing | 146 |
| 258 | Installing Front Drive Sliding Clutch | 146 |
| 259 | Installing Selector Assembly | 146 |
| 260 | Installing Front Drive Gear | 147 |
| 261 | Installing the Bearing Cone and Spacer | 147 |
| 262 | Installing Front Driving Shaft Assembly | 147 |
| 263 | Installing End-Plate Assembly | 148 |
| 264 | Installing Clamp Plate | 148 |
| 265 | Installing Front Drive Shaft Bearing Cover | 148 |
| 266 | Installing Front Output Shaft Bearing Cover | 149 |
| 267 | Measuring Front Output Shaft End-Play | 149 |
| | **GROUP 9 — REAR AXLE** | |
| 268 | Rear Axle Carrier | 151 |
| 269 | Removing Retainer Cover Bolts | 152 |
| 270 | Removing Power Divider Cage | 152 |
| 271 | Removing Bevel Pinion Housing Bolts | 153 |
| 272 | Removing Bevel Pinion Housing | 153 |
| 273 | Removing Rear Bearing Cover | 153 |
| 274 | Removing Through Shaft Bearing Assembly | 154 |
| 275 | Removing Bevel Pinion | 154 |
| 276 | Removing Bevel Pinion Spacers | 154 |
| 277 | Removing Rear Bearing Cup | 154 |
| 278 | Removing Front Bearing Cup | 154 |
| 279 | Removing Bearing Cone | 155 |
| 280 | Removing Carrier Side Cover Bolts | 155 |
| 281 | Removing Bearing Retainer Cover | 156 |
| 282 | Removing Pinion Shaft Housing Assembly | 156 |
| 283 | Removing Bevel Pinion Spacers | 157 |
| 284 | Removing Bearing Cone | 157 |
| 285 | Removing Clamp Plate Retaining Bolts | 157 |
| 286 | Removing Bearing Retainer | 158 |
| 287 | Removing Bearing Cup | 158 |
| 288 | Removing Pinion Shaft Bearing Cup | 159 |
| 289 | Removing Bearing Assembly | 159 |
| 290 | Removing Split Pin | 160 |
| 291 | Removing Locking Pin | 160 |
| 292 | Loosening Adjusting Nut | 160 |
| 293 | Removing Bearing Cup Retaining Bolts | 161 |
| 294 | Removing Bearing Cup | 161 |
| 295 | Separating Bull Gear and Driving Gear | 161 |
| 296 | Removing Outer Cam | 162 |
| 297 | Removing Inner Cam | 162 |
| 298 | Removing Inner Cam | 162 |
| 299 | Removing Inner Retaining Ring | 163 |
| 300 | Removing Outer Retaining Ring | 163 |
| 301 | Removing Wedges | 163 |
| 302 | Separating Cage and Bearing Retainer Cover | 164 |

| Fig. | Title | Page No. |
|---|---|---|
| 303 | Measuring Bevel Pinion Gear | 165 |
| 304 | Installing Front Bearing Cup | 166 |
| 305 | Measuring Bearing for Shimming | 166 |
| 306 | Fitting Spacers | 166 |
| 307 | Checking Bearing Pre-loading | 167 |
| 308 | Measuring Bevel Pinion Gear | 168 |
| 309 | Installing Front Bearing Cup | 168 |
| 310 | Checking Bearing Pre-loading | 169 |
| 311 | Verifying Shim Pack Thickness | 170 |
| 312 | Installing Left-hand Bearing Cup | 170 |
| 313 | Installing Location Pin | 171 |
| 314 | Installing Left-hand Bearing Cone | 171 |
| 315 | Installing Key | 172 |
| 316 | Installing Pinion Gear onto Shaft | 172 |
| 317 | Installing Clamp Plate | 173 |
| 318 | Fitting Left-hand Bearing Cup | 173 |
| 319 | Installing Bearing Retainer Housing | 173 |
| 320 | Installing Spacer | 174 |
| 321 | Installing Bearing Cone | 174 |
| 322 | Checking Bearing Pre-Loading | 175 |
| 323 | Installing Retainer | 175 |
| 324 | Aligning Pin and Slot | 175 |
| 325 | Installing Helical Pinion Shaft | 176 |
| 326 | Installing Bearing Cone | 176 |
| 327 | Installing Clamp Plate and Retaining Bolts | 176 |
| 328 | Checking Backlash | 177 |
| 329 | Pinion to Crown Wheel Tooth Contact Pattern | 177 |
| 330 | Installing Inner Cam | 178 |
| 331 | Installing Outer Cam | 179 |
| 332 | Aligning Side Casing and Cage Assembly | 179 |
| 333 | Installing Bull Gear and Retaining Bolts | 180 |
| 334 | Lock-Wiring Bolts | 180 |
| 335 | Installing Differential Assembly | 180 |
| 336 | Pre-loading Bearing | 181 |
| 337 | Checking Bearing Pre-load | 181 |
| 338 | Installing Locking Pin | 182 |
| 339 | Installing Split Pin | 182 |
| 340 | Tooth Contact Patterns | 182 |
| 341 | Installing O-ring | 183 |
| 342 | Tightening Moving Bolts | 183 |
| 343 | Installing Inner Cam | 184 |
| 344 | Installing Oil Seal | 185 |
| | **GROUP 10 — FRONT AXLE** | |
| 345 | Differential Carrier — Exploded View — Eaton Model 18123 | 187 |
| 346 | Removing Differential from the Carrier | 188 |
| 347 | Removing Inner Pinion Bearing | 188 |
| 348 | Dismantling Cases | 189 |
| 349 | Removing Differential Internal Components | 189 |
| 350 | Removing Differential Case Bearings | 189 |
| 351 | Assembly Indentification Markings | 190 |
| 352 | Staking Pinion Pilot Bearing | 190 |
| 353 | Installing Inner Bearing Cone and Spacer | 191 |
| 354 | Checking Correct Seating of Bearing Cups | 191 |
| 355 | Installing Pinion Cage and Outer Bearing | 191 |
| 356 | Check Pinion Bearing Pre-load | 192 |
| 357 | Install Bearing Cones | 192 |
| 358 | Installing Differential Gears | 193 |
| 359 | Assembling Differential Cases | 193 |
| 360 | Installing Crownwheel to Flange Differential Case | 193 |
| 361 | Installing Bearing Caps | 194 |
| 362 | Measuring Crownwheel with Dial Indication | 194 |
| 363 | Crownwheel Tooth Nomenclature | 195 |
| 364 | Correct and Incorrect Tooth Contact Patterns | 196 |

| Fig. | Title | Page No. |
|---|---|---|
| 365 | Adjustment of Crownwheel and Pinion Shaft to Obtain Correct Tooth Contact Pattern | 196 |
| 366 | Steerable Drive End Assembly | 197 |
| 367 | Removing Centre bolt | 198 |
| 368 | Removing Brake Assembly Retaining Bolts | 198 |
| 369 | Driving Split Ring into Position | 200 |
| 370 | Fitting Washer and Centre Bolt | 200 |
| 371 | Installing Drive-shaft | 201 |
| 372 | Installing Bearing | 201 |
| 373 | Fitting Oil Seal | 201 |
| 374 | Installing Lower Kingpin Mounting Stud | 202 |
| 375 | Fitting Steering Arm and Kingpin Bracket | 202 |
| 376 | Tightening Centre Bolt | 203 |
| | **GROUP 12 — BRAKE SYSTEM** | |
| 377 | Exploded View of Inlet Valve Assembly | 205 |
| 378 | Removing Disharge Valve, Valve Stop and Seat | 205 |
| 379 | Unloader Mechanism | 206 |
| | **GROUP 15 — ELECTRICAL** | |
| 380 | Generator Components and Wiring | 211 |
| 381 | Generator Circuit Diagram | 211 |
| 382 | Engine Wiring Harness | 212 |
| 383 | Main (Cab) Wiring Harness | 213 |
| 384 | Rear Wiring Harness | 213 |
| | **GROUP 19 — WINCH** | |
| 385 | Exploded View of Winch Assembly | 217 |
| 386 | Torque Limiter | 219 |
| 387 | Exploded View of Torque Limiter | 219 |
| 388 | Removal of Support Bearing Assembly | 220 |
| 389 | Support Bearing Assembly | 221 |
| 390 | Driving Roll Pin into Shaft | 222 |
| 391 | Removing Shaft | 222 |
| 392 | Match Marking Gear, Washers and Housing | 223 |
| 393 | Removing Bearings | 223 |
| 394 | Wedge Location | 224 |
| 395 | Checking PTO Adapter to Transmission Backlash | 224 |
| 396 | Checking Adapter to PTO Backlash | 225 |
| 397 | Match Marking Drive Gear and Housing | 226 |
| 398 | Removing Drive Gear Shaft | 226 |
| 399 | Match Marking Housing and Covers | 227 |
| 400 | Removing Gear and Bearing from Countershaft | 227 |
| 401 | Checking Countershaft Bearing Pre-load | 228 |
| 402 | Installing Selector Cover | 229 |
| 403 | Checking Adapter to PTO Backlash | 230 |

# LIST OF TABLES

| Table | Title | Page No. |
|---|---|---|
| 1 | Location of Identification Numbers on Major Unit Assemblies | |
| 2 | Special Tools | |
| | **GROUP 1 — ENGINE** | |
| 3 | Engine Specification and Torque Chart | 41 |
| | **GROUP 4 — FUEL** | |
| 4 | Fuel Injection Pump Inspection Procedures | 53 |
| 5 | Cleaning Materials | 87 |
| 6 | Compressor Wheel Balance Specifications and Stock Removal Limits | 88 |
| 7 | Turbine Wheel Assembly Balance Specifications and Stock Removal Limits | 90 |
| 8 | Service Limits | 92 |
| | **GROUP 5 — CLUTCH** | |
| 9 | Specifications Chart | 104 |

# ASSOCIATED PUBLICATIONS

1. Standing Orders for Vehicle Operation and Servicing

2. Australian Army Books:
   Record Book for Service
   Equipment AAB 140 (TGM 120)

3. Complete Equipment Schedules:
   (a) No. CCES 19233
   (b) No. SCES 11650
   (c) No. SCES (AMK) 11651
   } Truck Cargo: Heavy, MC3

4. Complete Equipment Schedules:
   (a) No. CCES 19234
   (b) No. SCES 11652
   (c) No. SCES (AMK) 11651
   } Truck Cargo: Heavy, Winch, MC3

5. Provisional Block Scale 2406/29

6. EMEI VEH A029 — SERVICING OF B VEHICLES

7. EMEI VEH A119-21 — REPAIR OF VEHICLES UNDER WARRANTY AGREEMENT

8. EMEI VEH G 700 — DATA SUMMARY (CARGO)

9. EMEI VEH G 700-1 — DATA SUMMARY (WINCH)

10. EMEI VEH G 702 — TECHNICAL DESCRIPTION

11. EMEI VEH G 703 — UNIT REPAIR

12. EMEI VEH G 704 — FIELD REPAIR

13. EMEI VEH G 709 — SERVICING

14. Australian Change In War Material 30348 (CARGO)

15. Australian Change In War Material 30349 (WINCH)

16. Repair Parts Scale 02160 (CARGO)

17. Repair Parts Scale 02161 (WINCH)

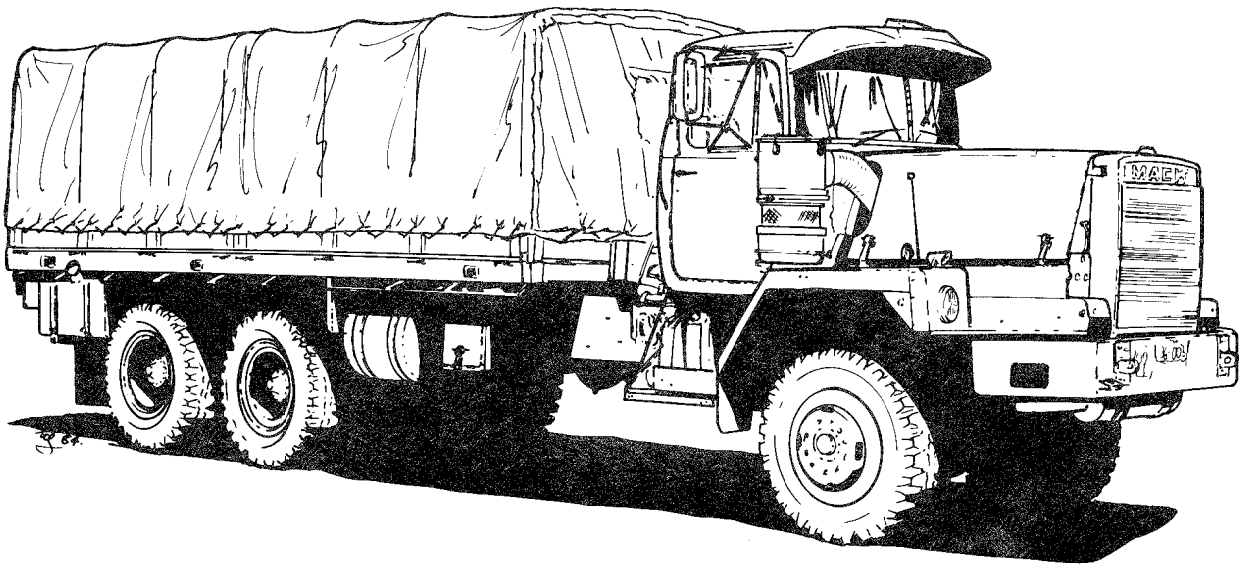


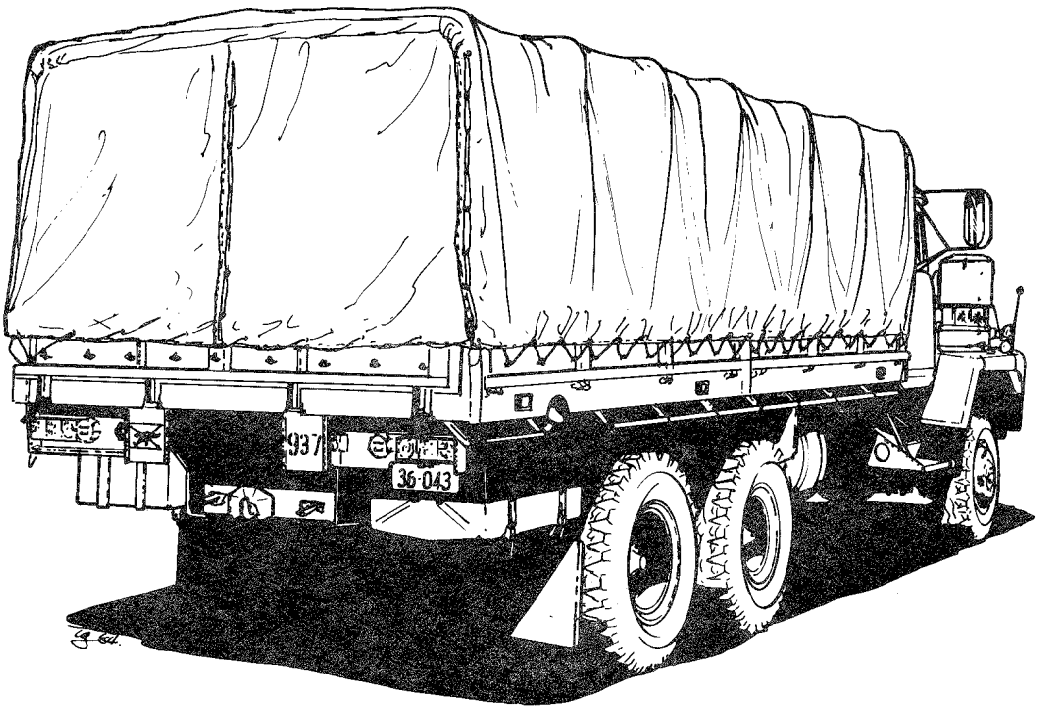


Fig. 1 — Truck — Three-Quarter Front and Rear Views

# MAJOR UNIT ASSEMBLIES (MUA) IDENTIFICATION

**Table 1. Location of Identification Numbers on Major Unit Assemblies**

Chassis No. — Right hand rear frame, above intermediate axle.

Chassis nameplate — Left hand door inside cab.

Engine No. — Right hand top of timing gear housing.

Front axle No. — Left rear of axle housing.

Transmission No. — Left hand side.

Transfer case — Right hand rear.

Intermediate axle No. — Right hand front of carrier housing.

Rear axle No. — Rignt hand front of carrier housing.

Injection pump identification — Side of the pump.

Winch — Upper face left hand side.

# SPECIAL TOOLS

Many of the procedures described in this EMEI require the use of special tools, jigs or fixtures. The special tools required are listed in Table 2 and illustrated in Figure 2.

## Table 2. Special Tools

| Part No. | Para No. | Page No. | Use |
|---|---|---|---|
| S-572 | 4b | 4 | Removing injector nozzle sleeve. |
| J-21374 | 5b | 5 | Installing injector nozzle sleeve. |
| J-23303 | 5e | 6 | Reaming injector nozzle sleeve. |
| | 44b | 76 | Reaming nozzle cavities. |
| J-25260 | 6a | 6 | Removing valve guide. |
| J-25258-1 | 7b | 7 | Installing valve guide. |
| J-24589 | 7c | 8 | Reaming valve guide. |
| J-22877 | 8a | 8 | Cutting fire-ring groove. |
| 13-77137 | 9b | 10 | Cutting valve seat counterbore. |
| J-25259-1 | 9c | 12 | Installing inlet valve seat. |
| J-25259 | 9c | 12 | Installing exhaust valve seat. |
| X825 | 9f | 13 | Checking valve seat runout. |
| J-26948 | 11a | 14 | Measuring valve head to deck clearance. |
| J-25065 | 14y | 21 | Removing cylinder liners. |
| J-21428-01 | 14ac | 21 | Removing camshaft bearings. |
| | 18b | 25 | Installing camshaft bearings. |
| J-21428 | 14ac | 21 | Removing auxiliary shaft bearings. |
| | 19b | 25 | Installing auxiliary shaft bearings. |
| J22963 | 17b | 23 | Aligning piston oil cooler nozzles. |
| J-21384-02 | 22d | 30 | Installing rear main oil seal. |
| J-23442 | 25l | 34 | Compressing piston rings. |
| J-21480 | 25p | 35 | Positioning connecting rod. |
| J-24230 | 26a | 37 | Installing front main oil seal. |
| J-26583 | 26d | 38 | Aligning timing cover. |
| TSE 7913D | 30h | 48 | Holding injection pump camshaft stationary. |
| TSE 7920 | 30h | 48 | Removing friction clutch. |
| TSE 761 | 30i | 48 | Installing service pins. |
| TSE 76156 B | 30i | 48 | Holding tappets clear of camshaft. |
| TSE 76160 D | 30q | 50 | Compressing tappet spring. |
| TSE 7697 | 30s | 51 | Removing tappet assemblies. |
| | 33ac | 59 | Installing tappet assemblies. |
| TSE 7661 | 30t | 51 | Removing and installing lower spring seats. |
| | 33aa | 59 | Installing lower spring seats. |
| TSE 76242 | 30x | 52 | Removing and installing valve bodies. |
| TSE 76150 | 30ab | 52 | Removing control rack bushes. |
| TSE 7621 | 30ag | 52 | Removing bearings from end plates. |
| TSE 7621-6 | 30ag | 52 | Collet (used with TSE 7621). |
| TSE 76197-1 | Table 4 | 56 | Testing sealing of delivery valve assembly. |
| TSE 76114 | 33e | 56 | Installing roller bearings on camshaft. |
| TSE 76145 | 33l | 57 | Installing control rack bushes. |
| TSE 76247 | 33l | 57 | Reaming control rack bushes. |
| TSE 7960 | 33an | 61 | Checking camshaft end play. |
| TSE 7695 | 38d | 68 | Adjusting injection pump calibration. |
| TSE 79100 | 38o | 71 | Checking "K" dimension. |
| TSE 77105 | 40c | 74 | Disassambling nozzle and holder assembly. |

## Table 2. — cont.

| Part No. | Para No. | Page No. | Use |
|---|---|---|---|
| TSE 7729 | 41d | 74 | Cleaning nozzle spray holes. |
| TSE 7936 | 45h | 77 | Removing operating shaft bushes and seal. |
| TSE 7935 | 47j | 79 | Installing operating shaft bushes. |
| TSE 7938 | 47j | 79 | Installing operating shaft oil seal. |
| TSE 7998 | 47q | 79 | Checking governor spring gap. |
| J-29677-1 | 50c | 83 | Holding turbine wheel. |
| J-29678-2 | 50d | 83 | Removing compressor wheel locknut. |
| J-29680 | 50e | 83 | Disassembly of turbine wheel. |
| J-29672 | 68e | 93 | Installing centre housing circlip. |
| J-28668-A | 84b | 113 | Removing idler gear. |
| J-23796 | 94aa | 125 | Installing main drive pinion oil seal. |
| J-24560 | 95w | 134 | Installing drive shaft front bearing nut. |
| J-26437<br>J-26481-27<br>J-26481-1<br>J-26481-2<br>J-26481-13<br>J-26481-14 | 116d<br><br><br>126m | 160<br><br><br>167 | Adjusting differential bearing.<br><br><br>Checking bevel pinion shim pack thickness (Intermediate carrier). |
| J-26481-19 | 127k | 169 | Gauge pin required for checking bevel pinion shim pack thickness (Rear carrier). |
| J-28506 | 132a | 183 | Assembling carrier (with power divider). |

## Tools to be Fabricated

| | | | |
|---|---|---|---|
| Nil | 38j | 70 | Measuring puff limiter extension. |
| Nil | 69g | 99 | Disassembling clutch. |
| 90061 | 165b | 219 | Torque limiter overhaul. |
| 90062 | 165a | 219 | Torque limiter overhaul. |

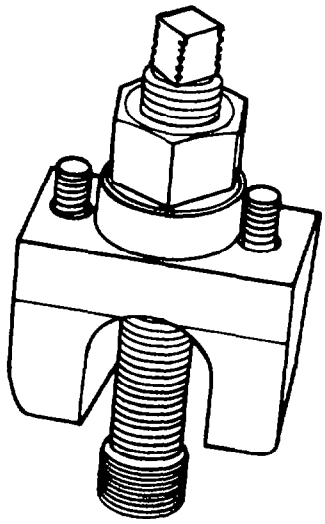

S-572

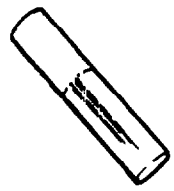

J-25258-1

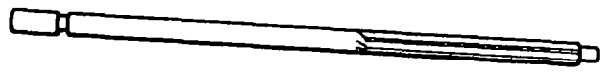

J-24589

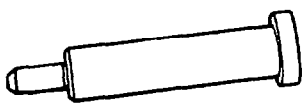

J-21374

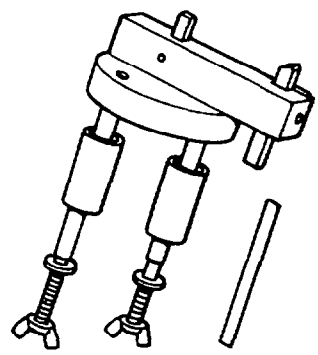

J-22877

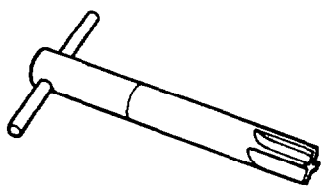

J-23303

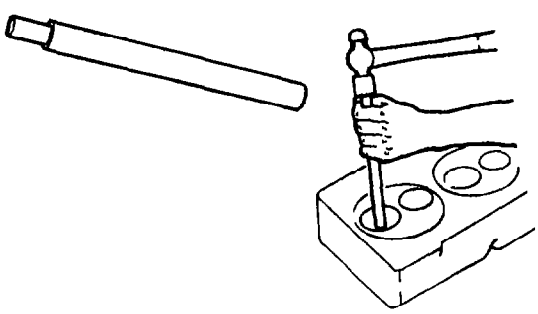

J-25260

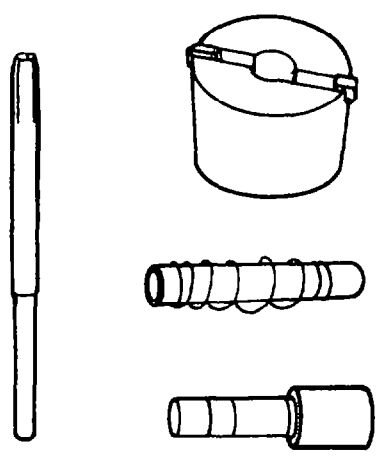

13-77137

Fig. 2 — Special Tools

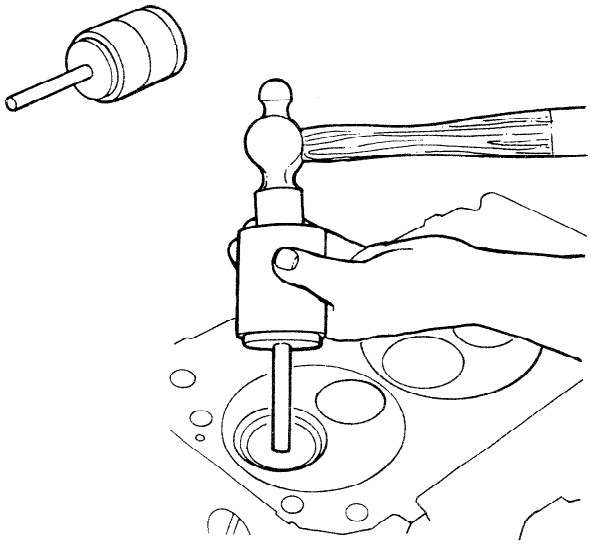

J-25259-1
J-25259

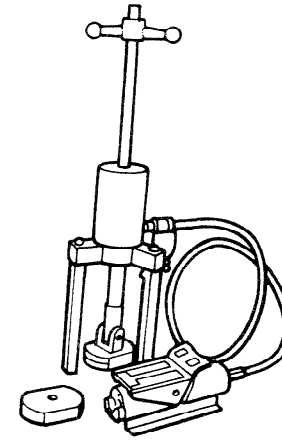

J-25065

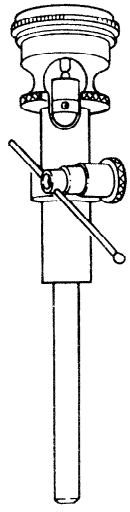

X-825

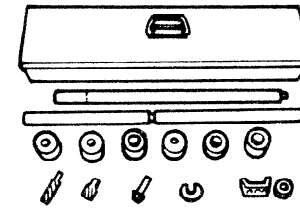

J-21428
J-21428-01

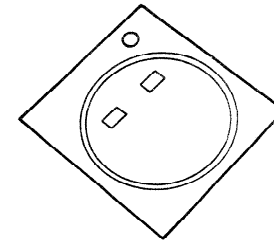

J-22963

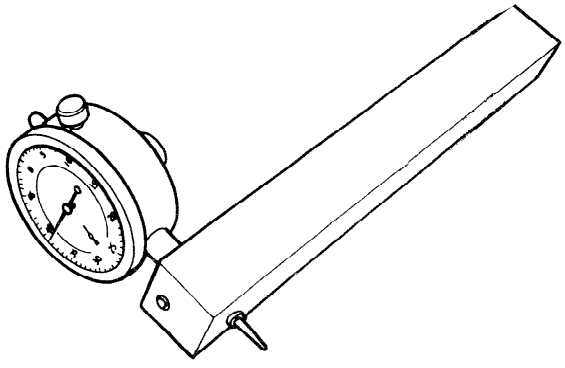

J-26948

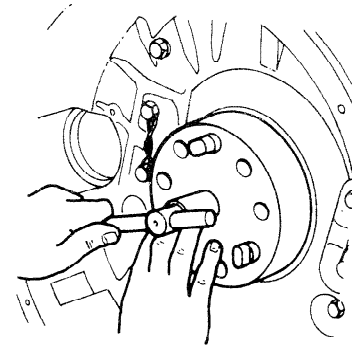

J-21384-02

Fig. 2 — *cont.*

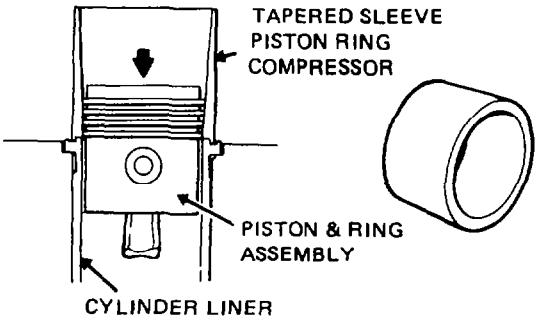


J-23442

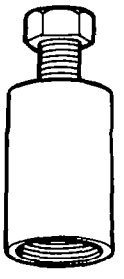

TSE 7920

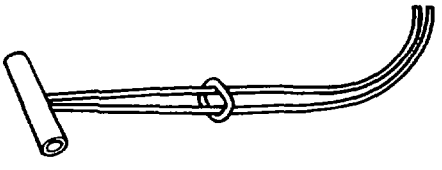

J-21480

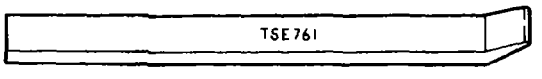


TSE 761

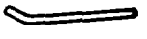

TSE 76156 B

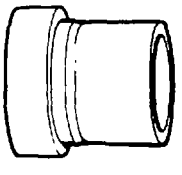

J-24230

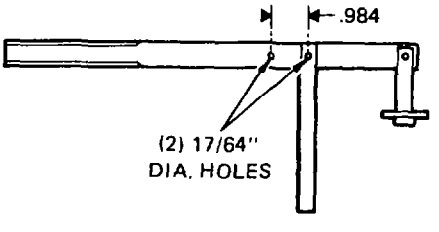


TSE 76160 D

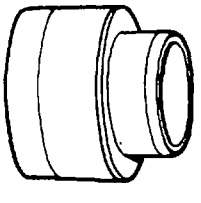

J-26583

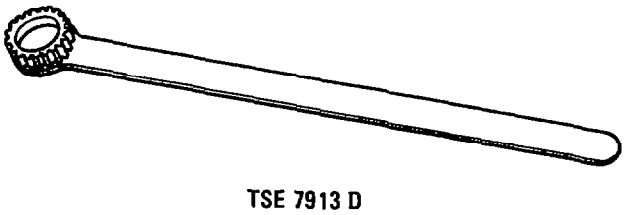

TSE 7913 D


TSE 7697

Fig. 2 — *cont.*

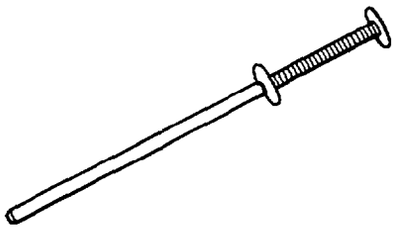

TSE 7661

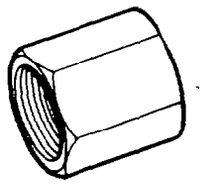

TSE 76197-1

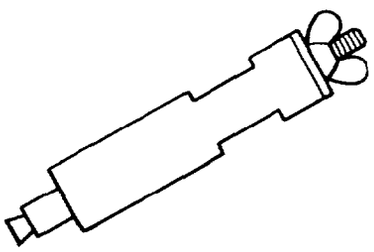

TSE 76242

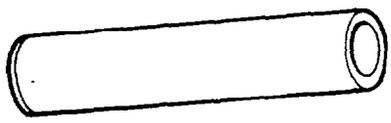

TSE 76114

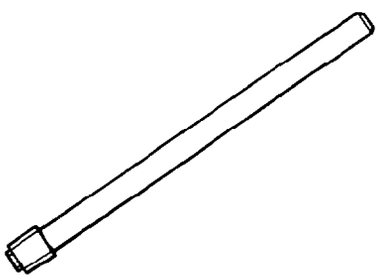

TSE 76150

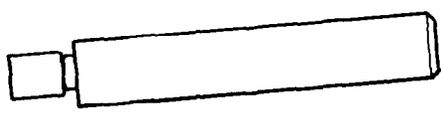

TSE 76145

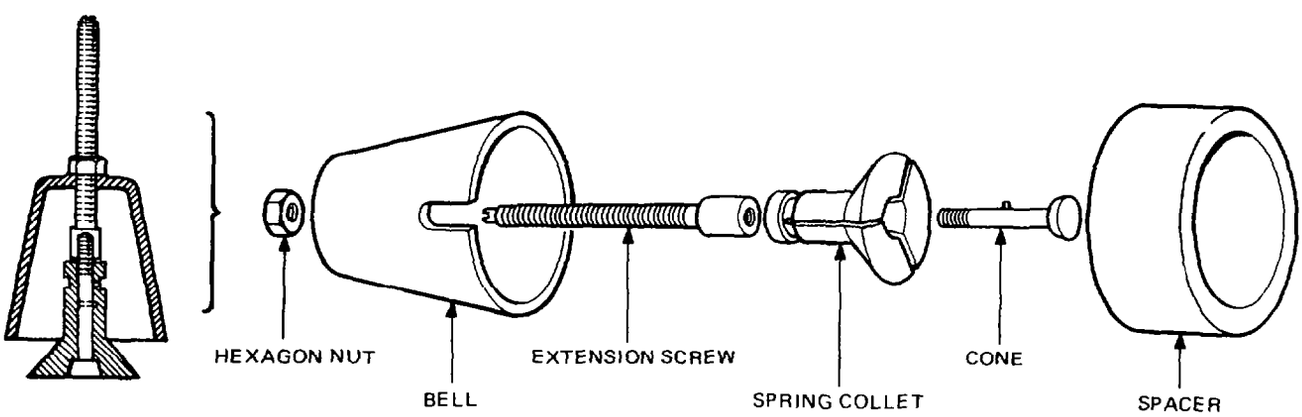


TSE 7621
TSE 7621-6

Fig. 2 — *cont.*

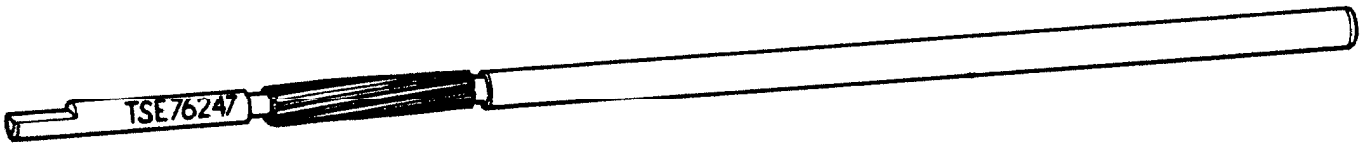


TSE 76247

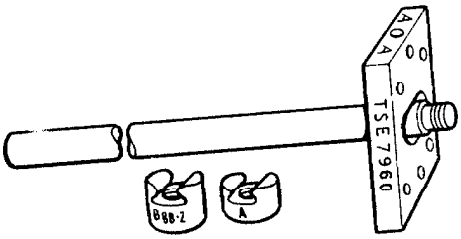


TSE 7960

TSE 7695

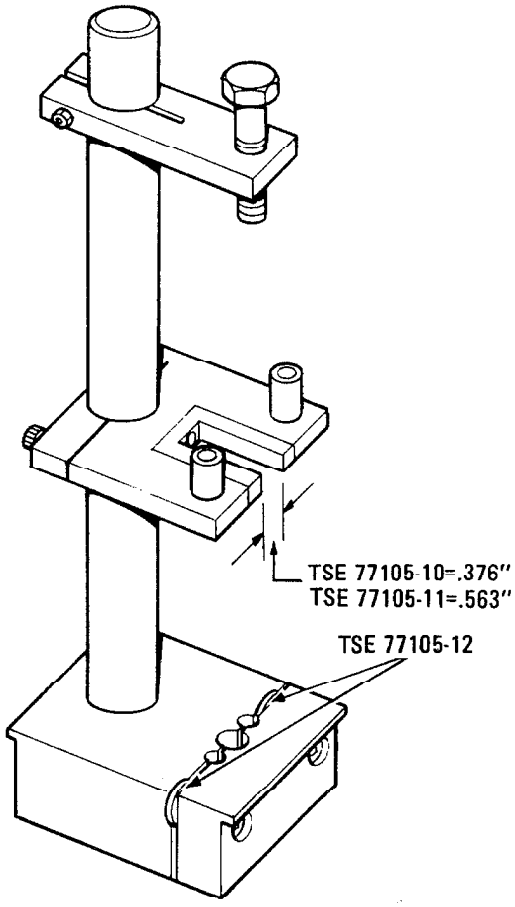


TSE 77105

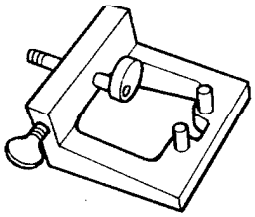

TSE 79100

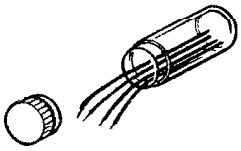

TSE 7729

Fig. 2 — *cont.*

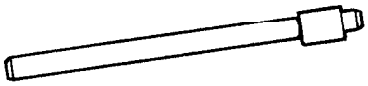

TSE 7936

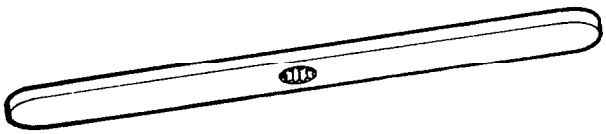

J-29678-2

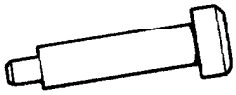

TSE 7935

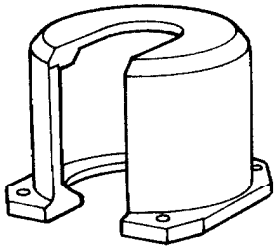

J-29680

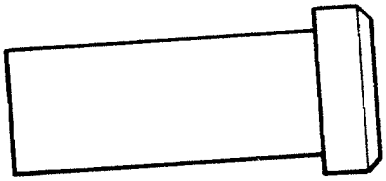

TSE 7938

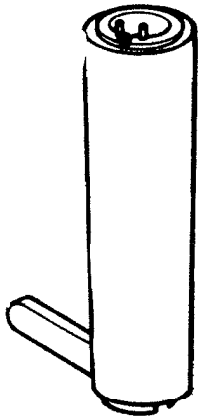

J-29672

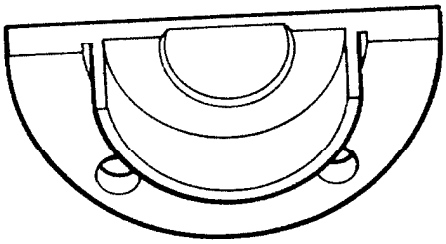

TSE 7998

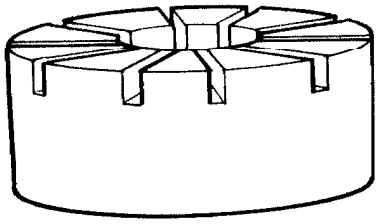

J-29677-1

J-28668-A

Fig. 2 — *cont.*

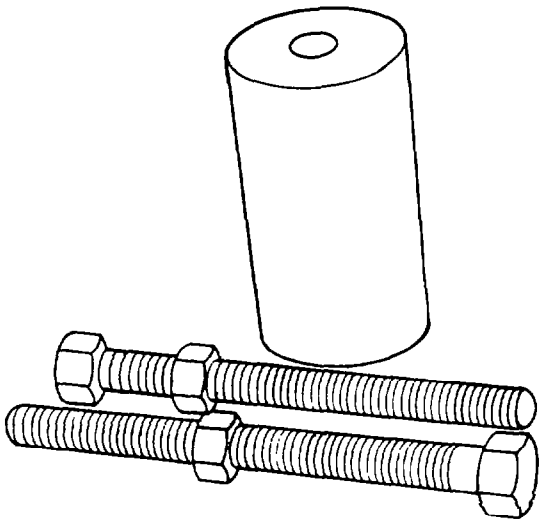

J-28668-A

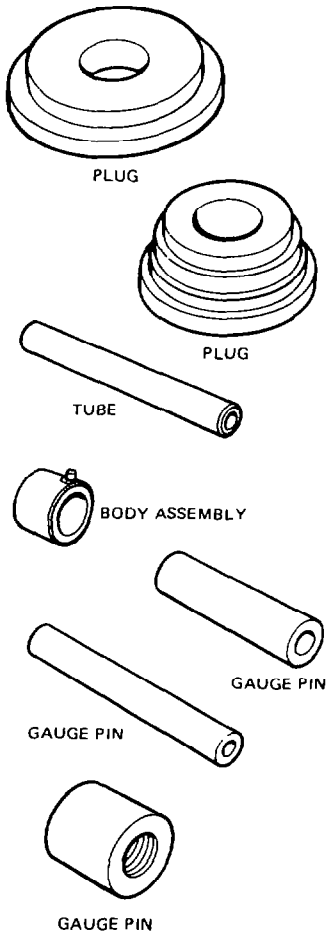


J-26481

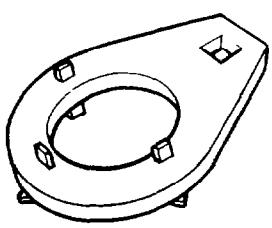

J-24560

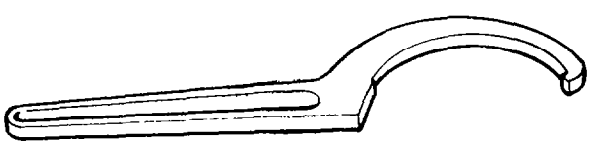

J-26437

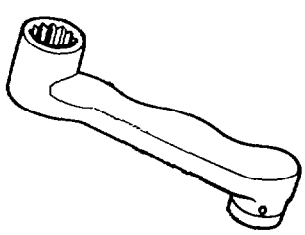

J-28506

Fig. 2 — *cont.*

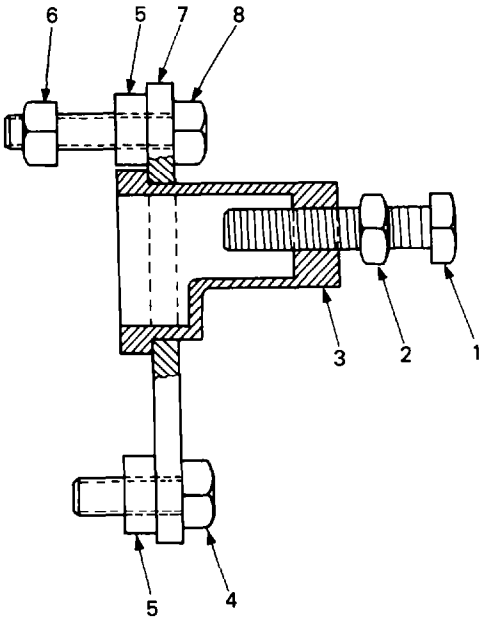


1. Hex Head Bolt 1/2 in. 20 UNF 2 1/4 in. long.
2. Hex Nut.
3. Puff Limiter Adapter.
4. Hex Head Bolt 3/8 in. 16 UNC 1 in. long.
5. Spacer 0.750 in. O.D. x 0.406 in. I.D. x 0.265 in. thick, cold rolled steel.
6. Hex Nut.
7. Clamping Plate.
8. Hex Head Bolt 3/8 in 16 UNC 1 in. long.

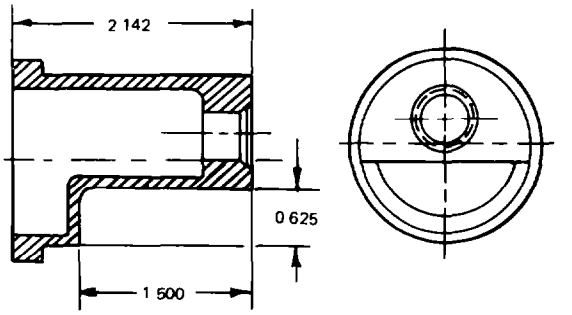


REWORKED 229GB22P2

PUFF LIMITER ADAPTER

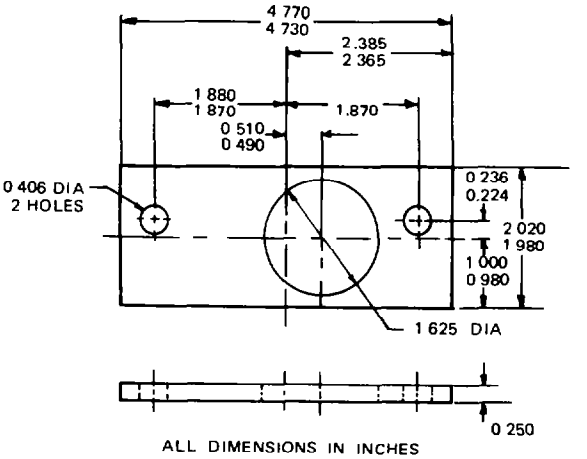


ALL DIMENSIONS IN INCHES

MATERIAL COLD ROLLED STEEL
(1/4 x 2 x 3/4)

CLAMPING PLATE

## PLE GAUGE

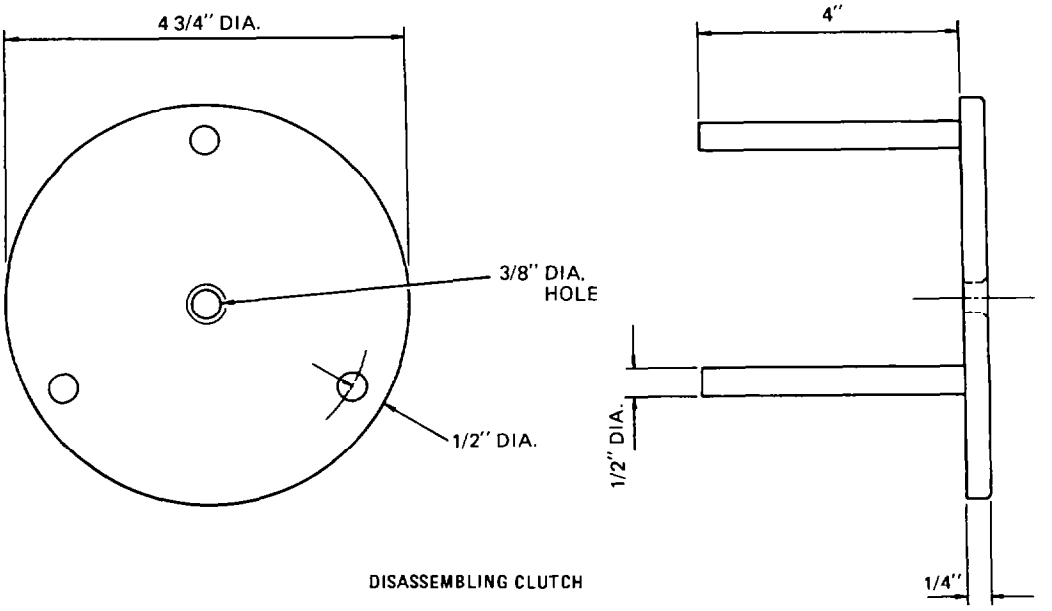


DISASSEMBLING CLUTCH

Fig. 2 — *cont.*

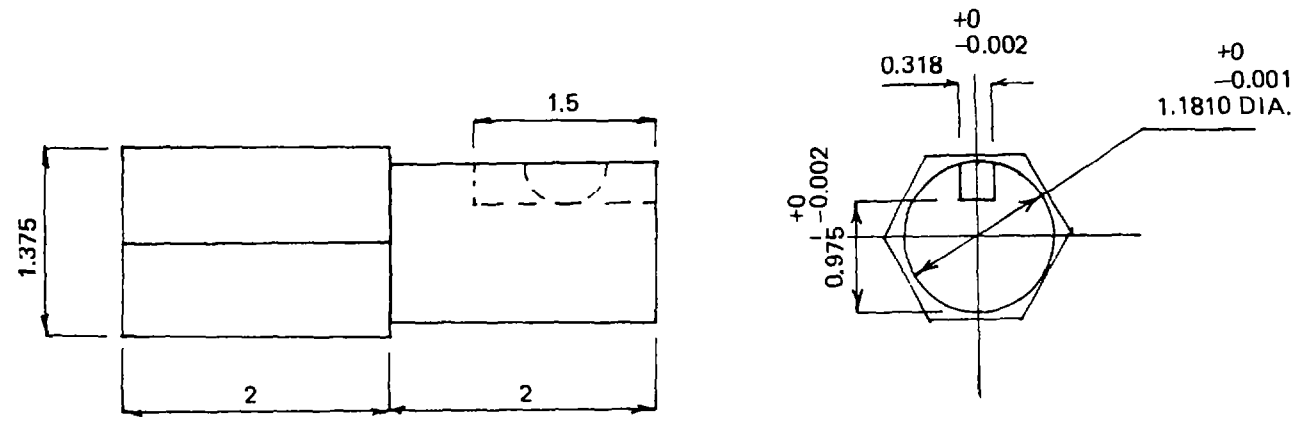


ALL DIM'NS. INCHES
MAT'L. M.S. HEX. BAR

90061

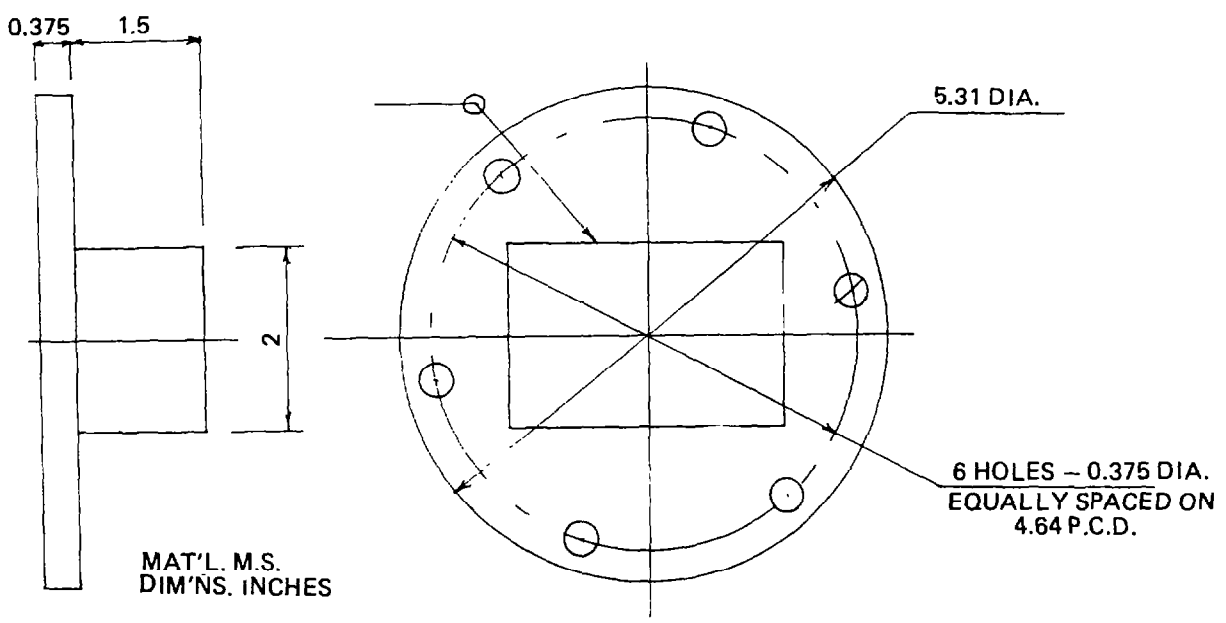


MAT'L. M.S.
DIM'NS. INCHES

90062

Fig. 2 — *cont.*

RESERVED

# GROUP 1 — ENGINE

NOTE: 1. This section details the procedures for the removal, dismantling, inspection, assembly and installation of the internal components of the engine. Because of the diversity and complexity of the techniques involved in refurbishing engine components, no machining procedures or techniques have been detailed. The technician to whom the job has been allocated must determine what work is required and carry out the repairs accordingly.

2. Tables listing the specifications for the engine and components are included at the end of this section and must be strictly adhered to at all times.
3. Observe a high standard of cleanliness at all repair stages; dirt or foreign matter in working components acts as an abrasive, resulting in severe wear and eventual failure of components.
4. Before dismantling the engine for overhaul, steam clean the engine to remove accumulated dirt and grime. Protect all electrical equipment and breather openings from direct steam application with a suitable cover or masking.
5. Before removing the cylinder heads from the engine block, remove the injectors to avoid subsequent accidental damage to the nozzles which protrude beyond the deck of the cylinder head, when installed in the head.

## CYLINDER HEAD

1 Overhaul Procedure

a. Remove the cylinder heads, (refer to EMEI VEH G 704 — Group 1).

b. Compress the valve spring and remove the collets, valve rotators and valve springs (see fig. 3).

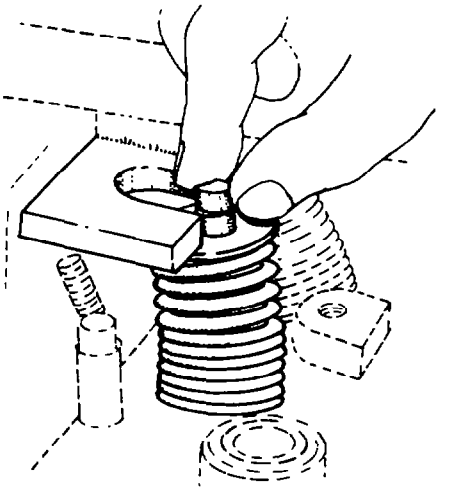

Fig. 3 — Removing Valve Spring Collets

c. If the cylinder head requires machining, check the thickness of the head with a micrometer; the standard minimum thickness of the head is 117.49 mm (4.622 in.). The head may be machined a maximum of 0.508 mm (0.020 in.) under the standard minimum thickness. If the head is still not true after having the maximum amount removed, the head is unserviceable (see fig. 4).

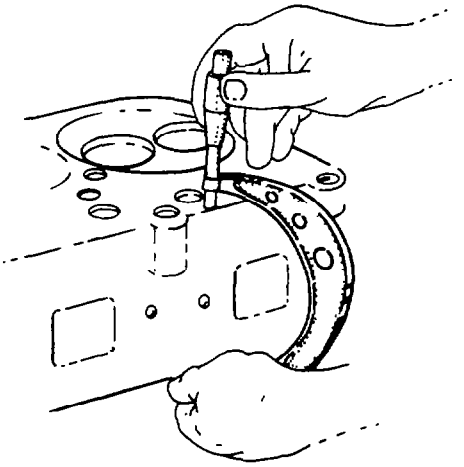

Fig. 4 — Measuring Cylinder Head

d. Clean the cylinder heads to remove all carbon deposits and then perform a pressure test.

2 Pressure Test

NOTE: The cylinder heads must be pressurised and checked for internal cracks and leaks; this is done by a water test which is outlined in the following steps. The water temperature should be 71 – 77 ° C (160 – 170 ° F) for this test.

a. Block off the water passages in the heads with 6.4 mm (¼ in.) rubber gaskets and steel plates. The bolts securing the steel plates and gaskets to the heads should be tightened enough to prevent leaks (see fig. 5).

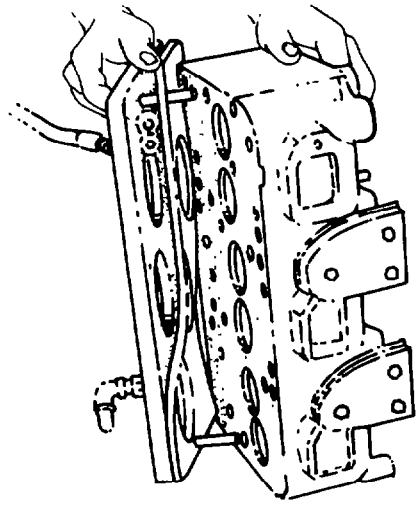

Fig. 5 — Attaching Blanking-off Plate

b. After the water and air lines are connected to the cover plate, fill the cavity from the water inlet line while the water outlet line is cracked open, allowing trapped air to escape. Make sure the entire cavity is full of water. Close the water outlet line and gradually add air pressure to 690 kPa (100 psi) (see fig. 6).

NOTE: While the head is under pressure, check around the injection port openings and core hole plugs for leaks. If leaks develop around the injection nozzle sleeve areas or the core hole plug areas, they must be replaced. If leaks develop in other areas, the head must be replaced.

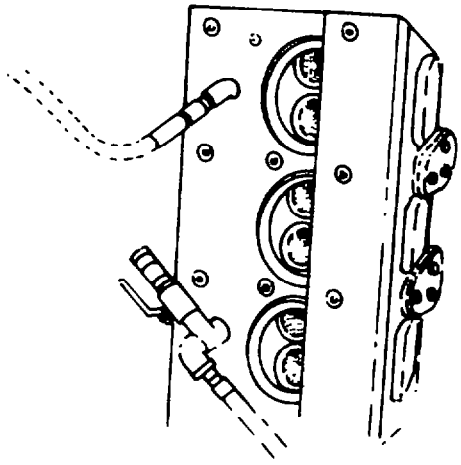

Fig. 6 — Pressure Testing Cylinder Head

3 Machining the Head Surface

a. De-burr the head to be sure that it lies flat during the machining process (see fig. 7).

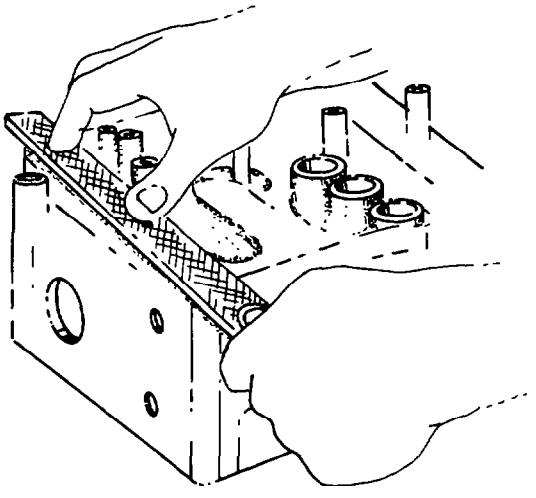

Fig. 7 — De-burring Head Surface

b. Machine the head to obtain a true surface (see fig. 8).

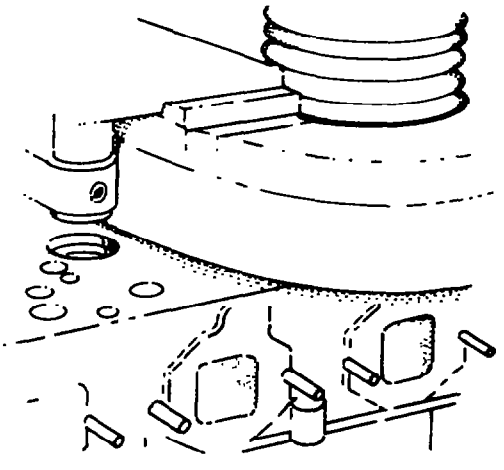

Fig. 8 — Machining Head

c. After machining, recheck the thickness of the cylinder head with a micrometer to ensure that it is within specifications (see fig. 9).

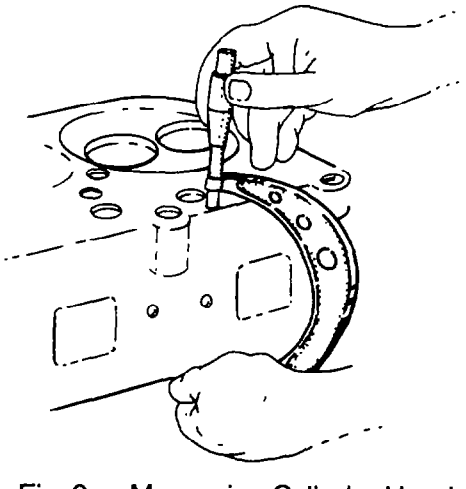

Fig. 9 — Measuring Cylinder Head

NOTE: After machining the cylinder head, the valve seat insert counterbore must be machined by the same amount to maintain a depth of 11.20 – 11.30 mm (0.441 – 0.445 in.) between the cylinder head surface and the bottom of the insert counterbore.

4 Injector Nozzle Sleeve Removal

a. Use a ⅞in-9 NC tap to cut a thread in the sleeve (see fig. 10).

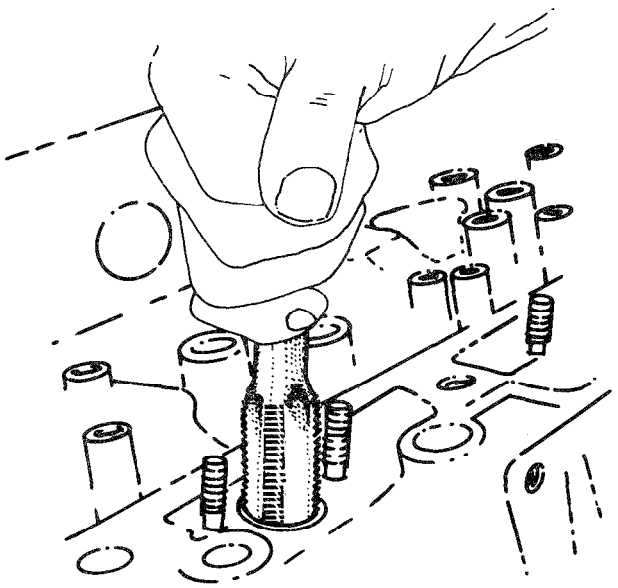

Fig. 10 — Cutting Threads into Nozzle Sleeve

b. Install tool S-572 with the adapter and remove the nozzle sleeve (see fig. 11).

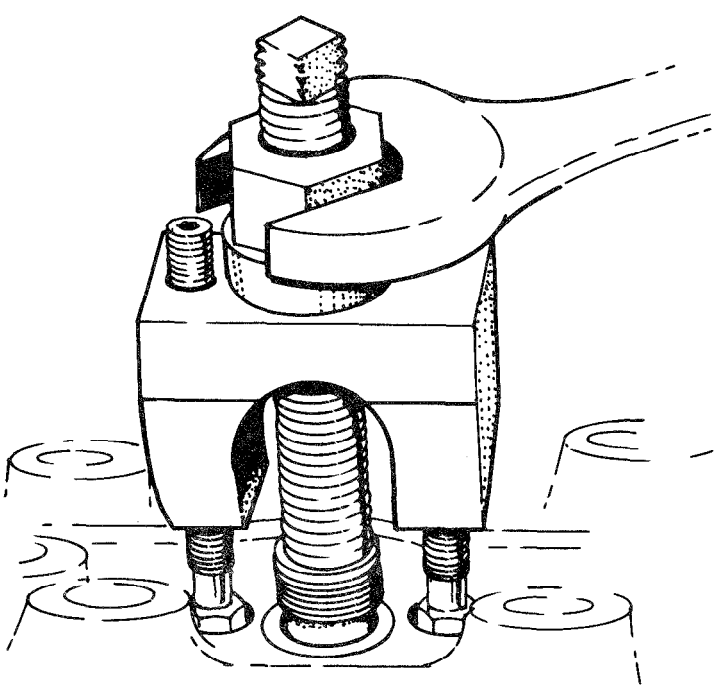

Fig. 11 — Removing Nozzle Sleeve

5 Injector Nozzle Sleeve Installation

> *CAUTION:*
> *Before installing a new sleeve, clean the mating surfaces in the head and check for cracks.*

a. Before installing the new sleeve, coat both ends of the sleeve with anti-seize (see fig. 12).

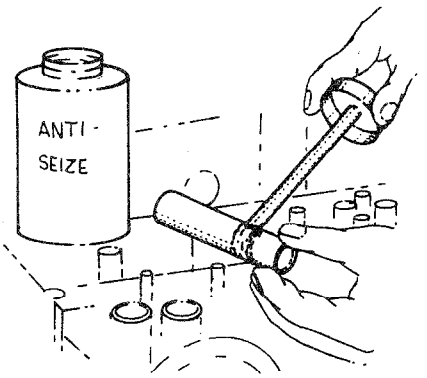


Fig. 12 — Applying Anti-seize to the Nozzle Sleeve

b. Install tool J-21374, or equivalent, into the sleeve (see fig. 13).

NOTE: This drive tool has a pilot which guides the insert into place. The shoulder of the tool will come in contact with the head surface, leaving the injection nozzle sleeve at the correct depth.

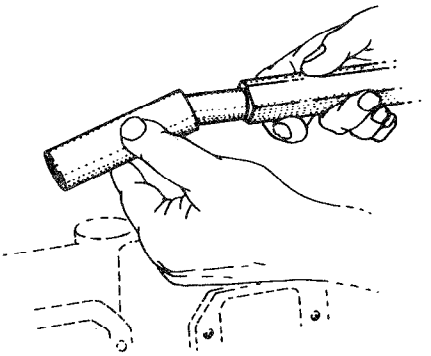

Fig. 13 — Installing Tool J-21374

c. Insert the tool with the sleeve into the head; drive the sleeve into position with a hammer (see fig. 14).

NOTE: The sleeves must be reamed after being installed in the head.

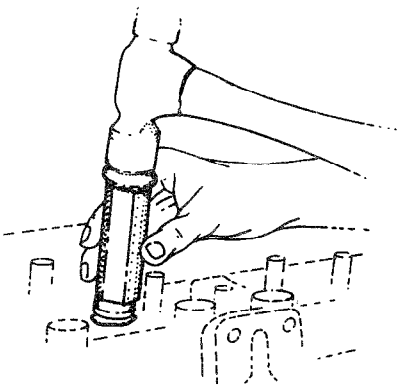

Fig. 14 — Driving Sleeve into Head

d. Correctly position the head. The injection nozzle sleeves must be perpendicular to the drill press table (see fig. 15).

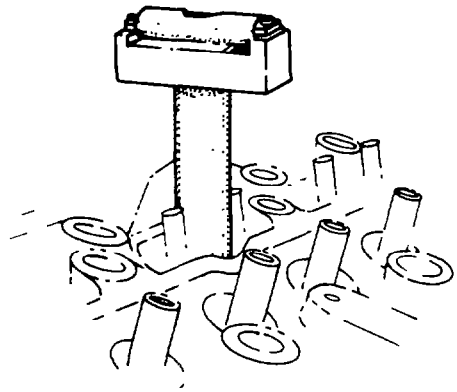

Fig. 15 — Levelling Cylinder Head

e. Ream the new injection nozzle sleeves using tool J-23303 (see fig. 16).

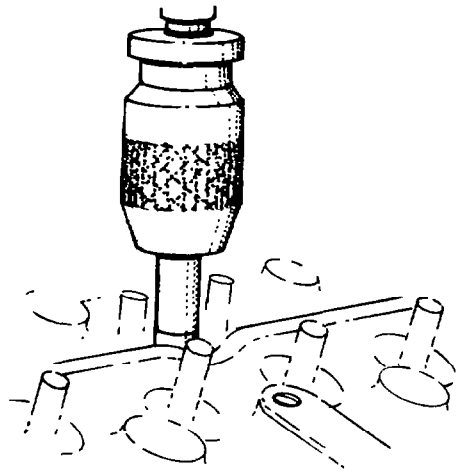

Fig. 16 — Reaming Sleeves

f. After reaming, remove the burrs from the ends of the sleeves to prevent possible scoring of the injection nozzles.

6 Valve Guide Removal

NOTE: Inspect the valve guides for wear, damage and looseness. It is recommended, when reconditioning the cylinder head, that all valve guides be replaced.

a. Install the valve guide removing tool J-25260, or equivalent, into the valve guide (see fig. 17).

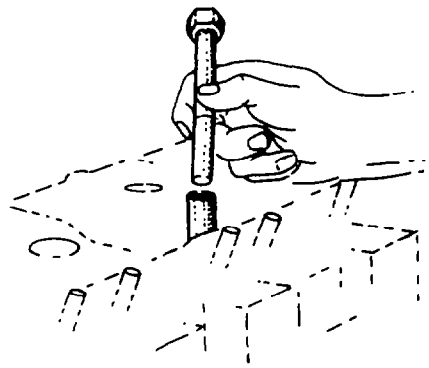

Fig. 17 — Installing Tool J-25260

b. Press out the old valve guides from the top of the head (see fig. 18).

NOTE: After removing the valve guides, clean the mating surfaces in the head and inspect for cracks or wear.

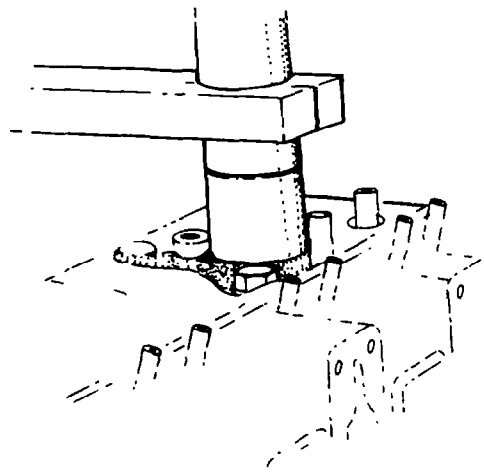

Fig. 18 — Removing Valve Guides

7 Installation

a. Apply engine oil to the new valve guides before installing (see fig. 19).

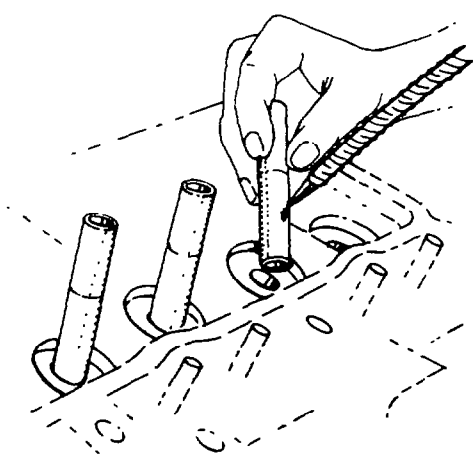

Fig. 19 — Oiling New Valve Guides

b. Press the valve guides into the head using tool J-25258-1 or equivalent (see fig. 20).

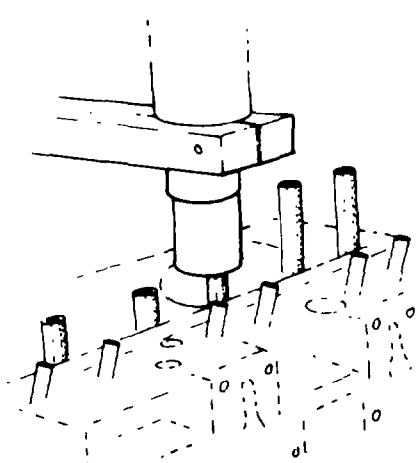

Fig. 20 — Installing New Valve Guides

c. Ream the new valve guide after installation with tool J-24589, or equivalent (see fig. 21).

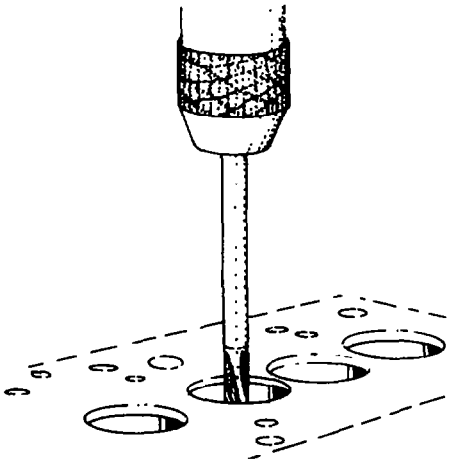

Fig. 21 — Reaming Valve Guides

d. Check the valve guide for the proper I.D. after reaming.
e. Invert the cylinder head and check the extension of the guide from the deck to the end of the guide for the correct distance of 39.2887 mm (1.5468 in.) (see fig. 22).

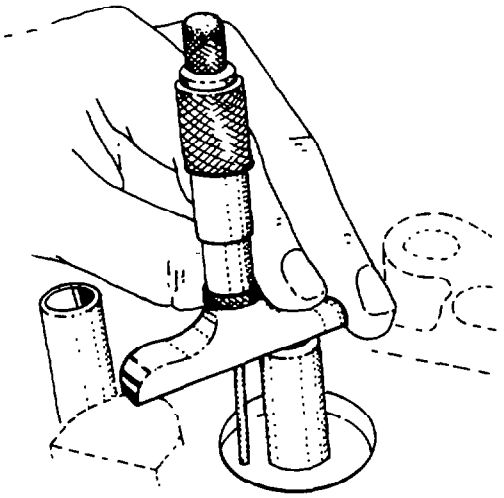

Fig. 22 — Measuring Guide Extension

8 Cutting Fire Ring Groove

NOTE: After machining the cylinder head, the fire ring groove must be re-cut; the width of the groove is 0.84 mm (0.033 in.) by 0.20 mm (0.008 in.) deep.

a. Insert the cylinder head grooving tool J-22877, backwards so that the cutting bit comes in contact with the face of the head rather than the fire ring groove. Insert two 0.20 mm (0.008 in.) feeler gauges between the base and the bit holder (see fig. 23). Loosen the bit holding screw and allow the bit to rest on the face of the cylinder head. Tighten the bit in this position and remove the feeler gauges.

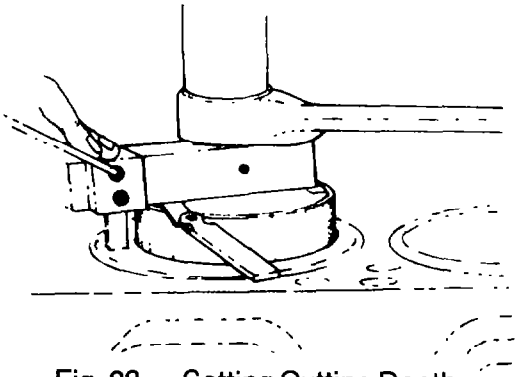

Fig. 23 — Setting Cutting Depth

b. Remove the tool from the cylinder head and reverse it so that the cutting bit comes in contact with the fire ring groove (see fig. 24).

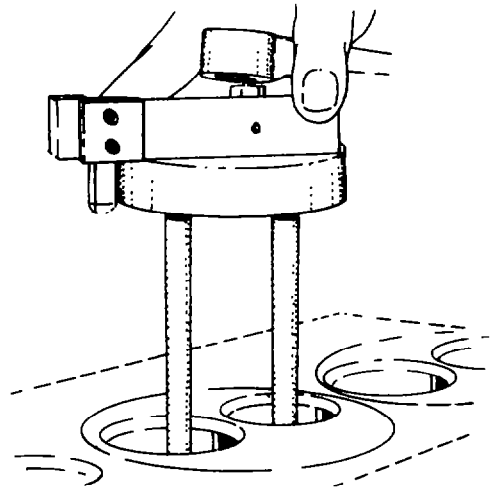

Fig. 24 — Installing Cutting Tool

c. Position a suitable ratchet spanner over the drive pin of the tool and lower the press onto the spanner to give a slight pressure when cutting the fire ring groove (see fig. 25).

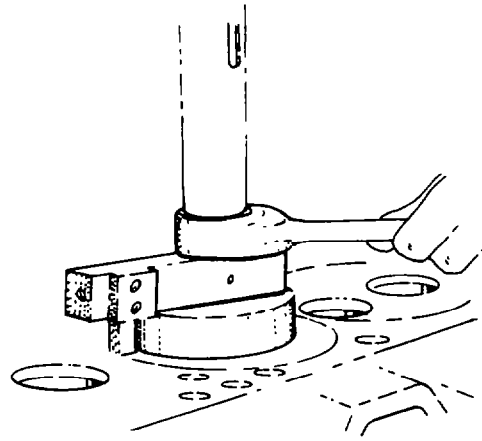

Fig. 25 — Cutting Fire Ring Groove

d. After the grooves are cut, remove the head from the press and remove the cutting tool. Remove the burrs from the area around the fire ring groove with a honing stone (see fig. 26).

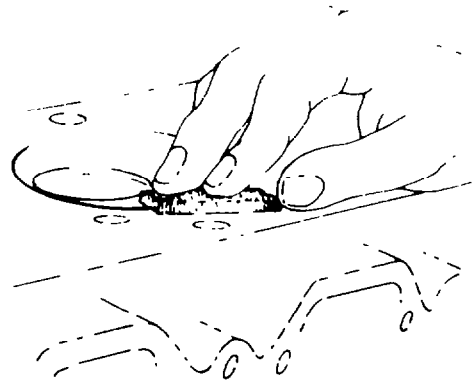

Fig. 26 — De-burring Fire Ring Groove

9 Valve Seat Insert Replacement

NOTE: After machining the valve seat inserts, remove all filings and inspect each insert for cracks. If there are any cracks or surface imperfections, the insert must be replaced.

a. Remove the valve seat insert by running a bead of weld on the angled face of the valve seat, using an arc welder. This will cause the valve seat to shrink enabling easy removal of the seat (see fig. 27).

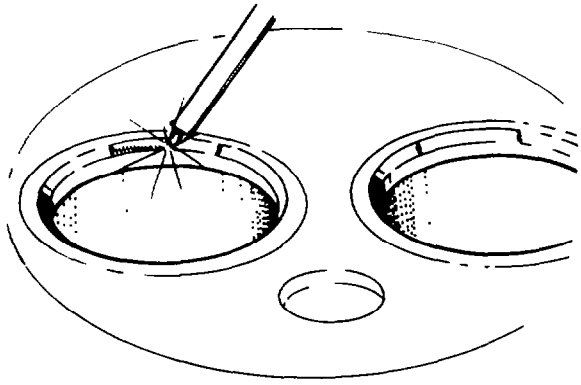

Fig. 27 — Removing Valve Seat Inserts

b. After removing the insert, it is necessary to machine the insert counterbore. Assemble the parts of Hall Toledo Tool No. 13-77137, or equivalent, as follows:

1. Install the cutting tool pilot into the guide (see fig. 28).

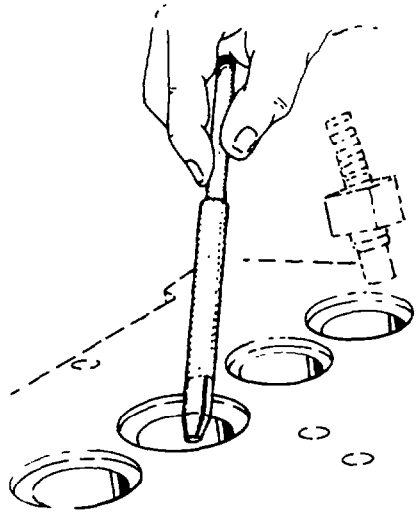

Fig. 28 — Installing Cutting Tool Pilot

2. Install the sleeve over the pilot (see Fig. 29).

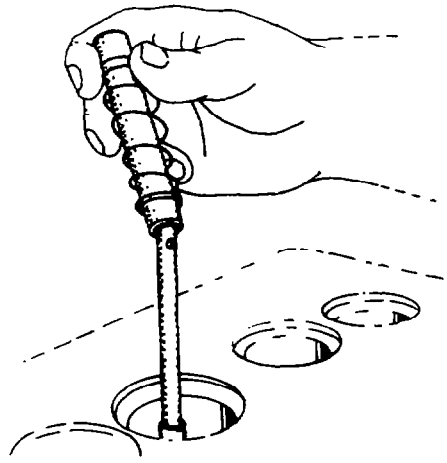

Fig. 29 — Installing Sleeve over Pilot

3. Install the counterbore cutter over the sleeve (see fig. 30).

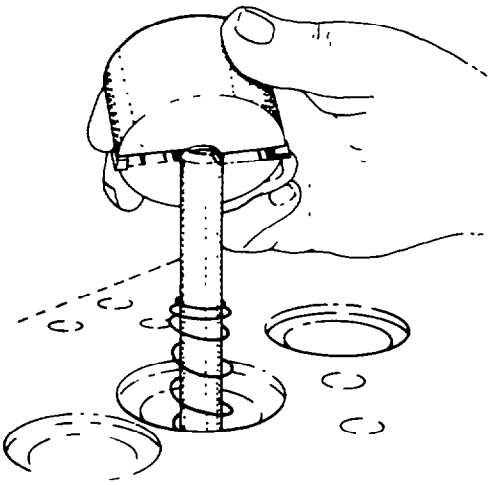

Fig. 30 — Installing Counterbore Cutter

4. Install the sleeve assembly in the press (see fig. 31).

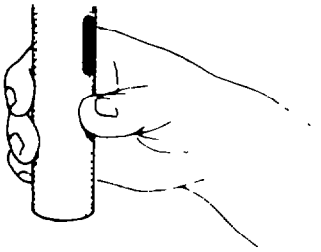

Fig. 31 — Installing Sleeve Assembly

5. Install the core in the sleeve (see fig. 32).

NOTE: The cutting tool is driven by the core ends which fit into the top of the cutting tool.

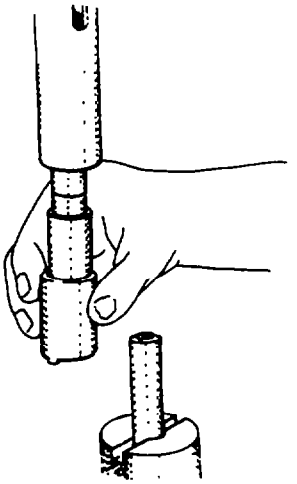

Fig. 32 — Installing Core

6. Lower the sleeve assembly over the cutting tool (see fig. 33).

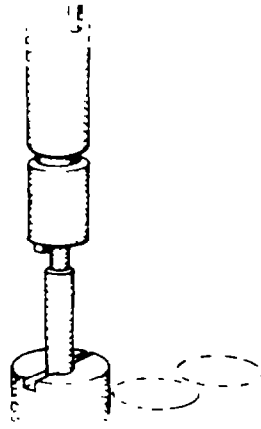

Fig. 33 — Lowering Sleeve Assembly

7. Cut the counterbore to a depth of 11.20 – 11.30 mm (0.441 – 0.445 in.) when measured from the cylinder head surface (see fig. 34).

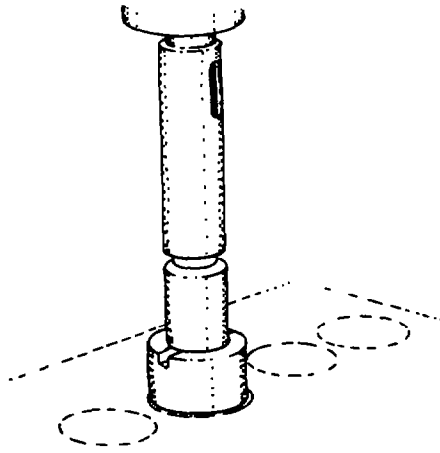

Fig. 34 — Cutting Counterbore

8. After cutting the valve seat counterbore, clean all cuttings and filings from the counterbore using a fine honing stone before installing the new valve seat insert.

NOTE: To help installation of the valve seat insert, chill the insert in a freezer or dry ice before installing.

c. To install the new seat inserts into position, use drive tool J-25259-1 for the intake and J-25259 for the exhaust (see fig. 35).

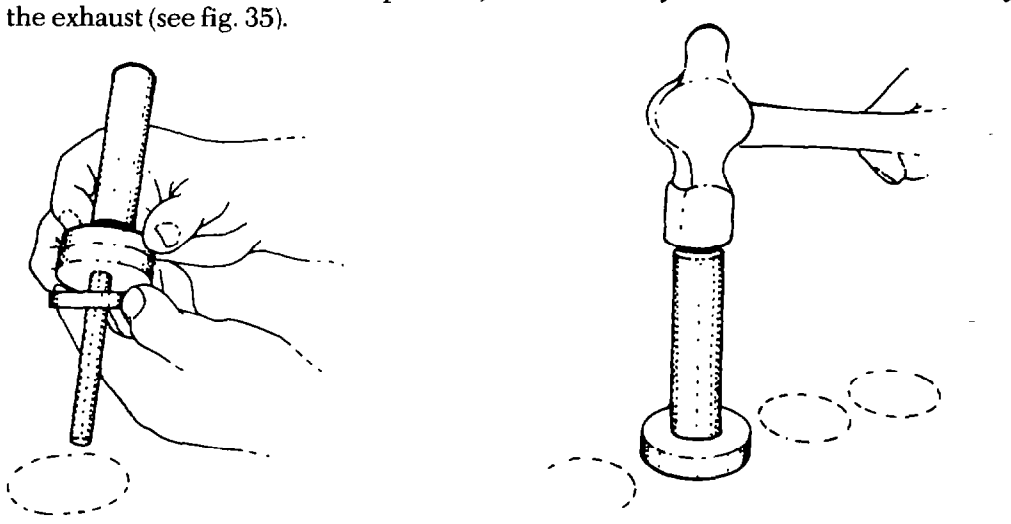

Fig. 35 — Installing Valve Seat Inserts

d. Stake the exhaust valve seat insert in two places diametrically opposite so that 0.13 – 0.38 mm (0.005 – 0.015 in.) of cylinder head material overlaps the edge of the inserts (see fig. 36).

NOTE: Stake the exhaust valve seat insert only, do not stake the valve seat in the area of the injector nozzle hole.

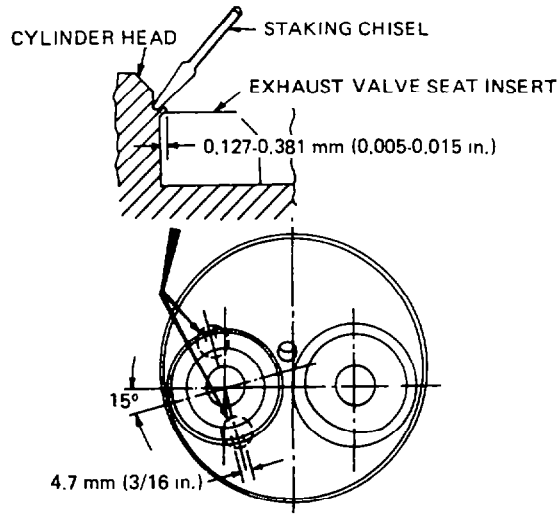


Fig. 36 — Staking Inserts

e. Grind the new valve seat inserts to specifications shown in fig. 37.

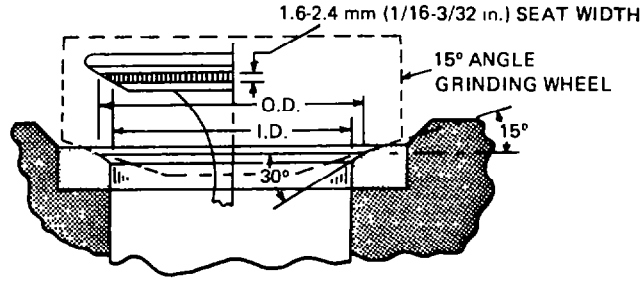


Fig. 37 — Grinding Inserts

f. After the valve seats have been ground to specifications and properly cleaned, check the valve seat run-out using Sioux Tool X825 (see fig. 38).

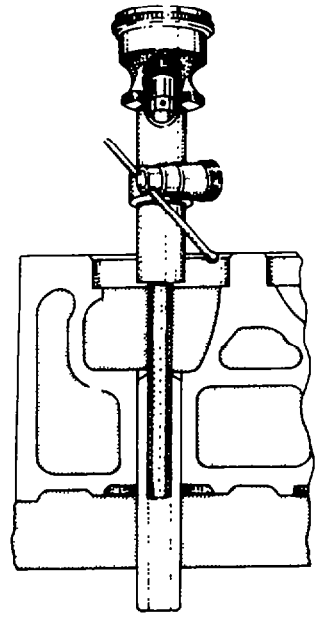

Fig. 38 — Checking Valve Seat Run-out

10 Valve Reconditioning

NOTE: When valves are removed from the engine, they must be sand-blasted to remove all carbon from the entire valve.

a. Check the valve stem for straightness. If the stem is bent, the valve must be replaced.

b. Recondition the valve.

11 Installing Valves

NOTE: After grinding the valve seat inserts, remove all filings and install a valve to check for required depth.

a. Zero tool J-26948 on cylinder head face next to the valve (see fig. 39).

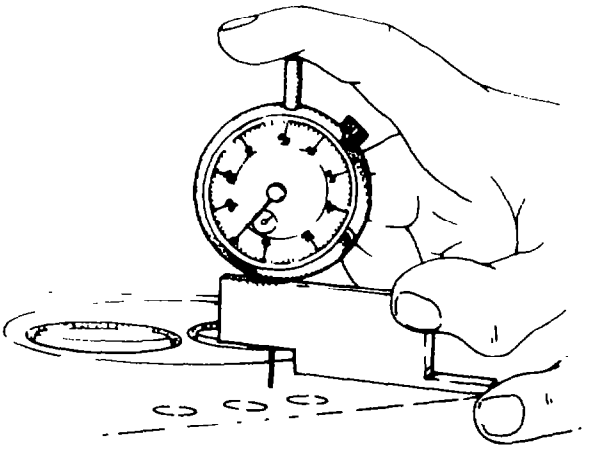

Fig. 39 — Zeroing Depth Gauge

b. Move the depth gauge over to the valve and check that the clearance is 0.35 mm (0.014 in.) (see fig. 40).

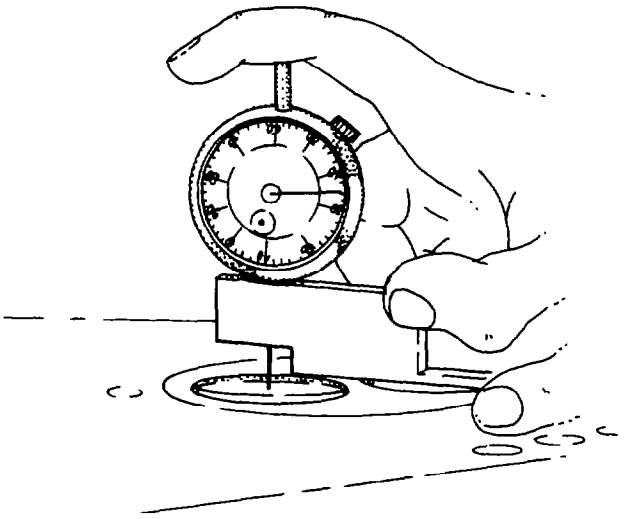

Fig. 40 — Measuring Valve Head to Deck Clearance

NOTE: If the depth of the valve is less than the specified tolerance, grind the valve seat insert as described previously. If the depth of the valve is greater than the specified tolerance, insert a new valve to be sure it is not the valve itself at fault. If the depth of the new valve is greater than the specified tolerance, replace the valve seat insert as previously described. If the valve is within specified tolerances, check the seal of the valve seat mating surfaces as follows:

c. Install a vacuum line with a seal at the port opening (see fig. 41).

NOTE: The vacuum gauge must read 635.0 mm (25 in.) of mercury (minimum). The vacuum pump is then shut off and the gauge reading should not drop more than 76 mm (3 in.) maximum in 5 seconds.

Fig. 41 — Installing Vacuum Test Line

d. Remove the valve from the head and apply lapping compound on the seating surface (see fig. 42).

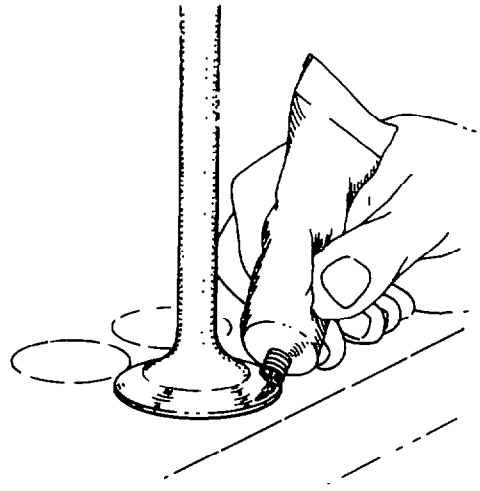

Fig. 42 — Applying Lapping Compound

e. Place the valve back in the head and oscillate it to remove surface imperfections (see fig. 43).

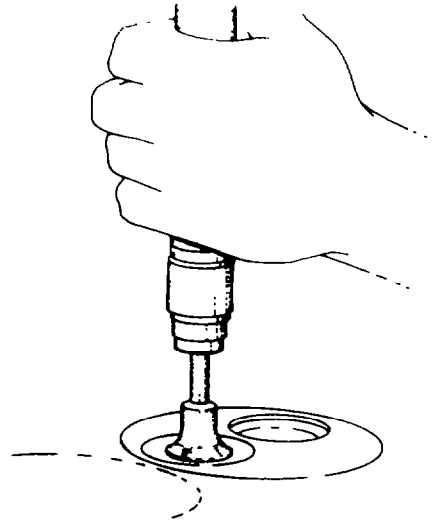

Fig. 43 — Lapping-in Valves

NOTE: Remove the valve from the head and wipe off the lapping compound. Install the valve and re-check the seat seal with the vacuum pump. If the valve still does not hold the specified vacuum on the vacuum gauge, check the valve seat insert mating surface on the valve for imperfections.

12 Cylinder Head Tapped Hole and Stud Thread Dressing Procedure

a. Insert an old fuel injector into each injector nozzle sleeve to check for binding and straightness of studs (see fig. 44).

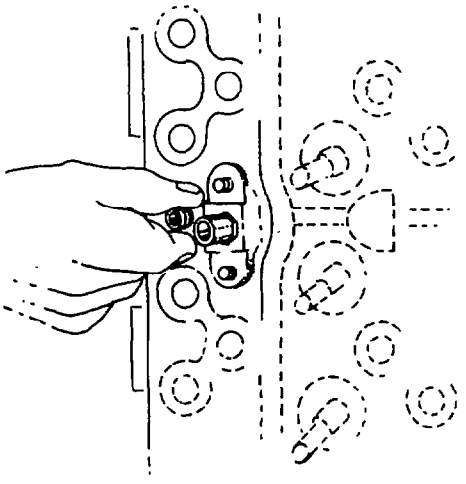

Fig. 44 — Checking Injector Nozzle Sleeves

b. Check the threads on all the studs with a die (see fig. 45).

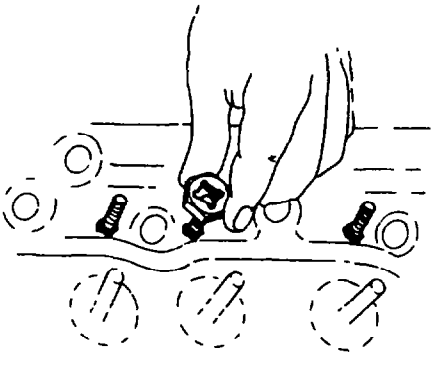

Fig. 45 — Checking Stud Threads

c. Run the appropriate tap into all threaded holes, including the manifold bolt holes, rocker arm shaft mounting holes and fuel line clip hole which is located at the rear end of the front cylinder head to dress the threads (see fig. 46).

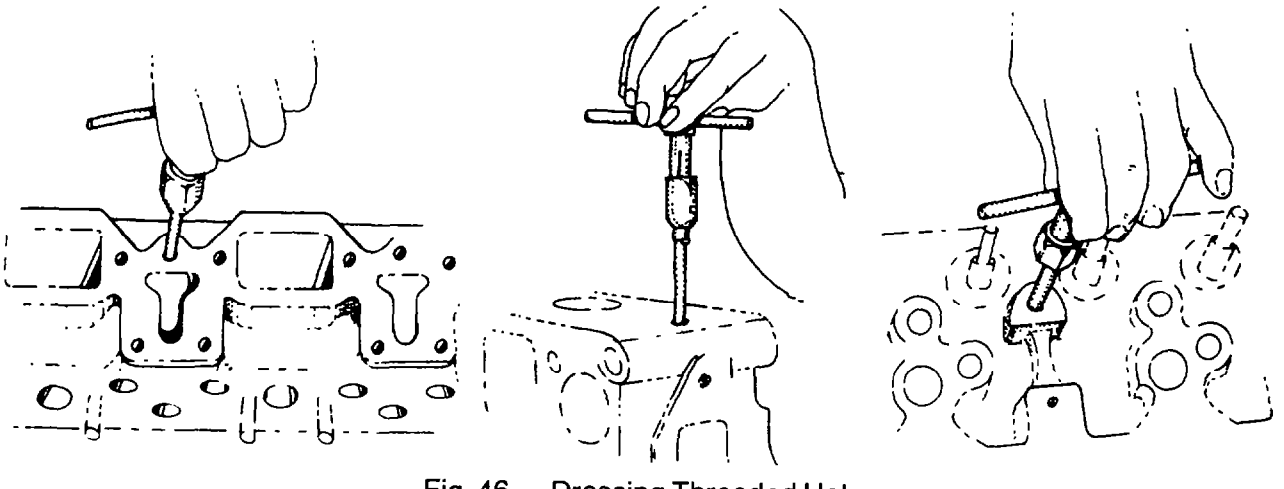

Fig. 46 — Dressing Threaded Holes

d. Clean the heads thoroughly to remove all traces of grease and metal filings.

13 Installing Valve Springs

a. Install both inner and outer valve springs with the tighter wound coils towards the head (see fig. 47).

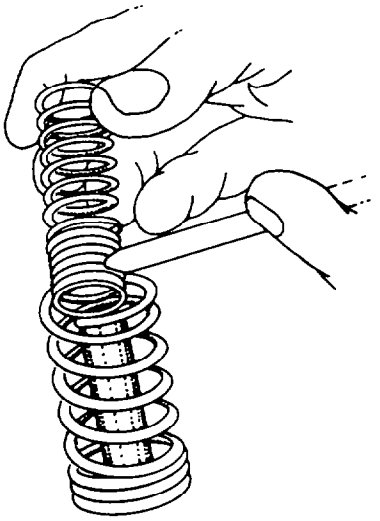

Fig. 47 — Installing Valve Springs

b. Before installing the valve rotators, visually inspect for looseness, broken pieces and cracks in the tapered hole. If no defects are noted turn the rotator by hand. The upper and lower sections should rotate smoothly without binding. Replace defective units. After checking, install with the small end down (see fig. 48).

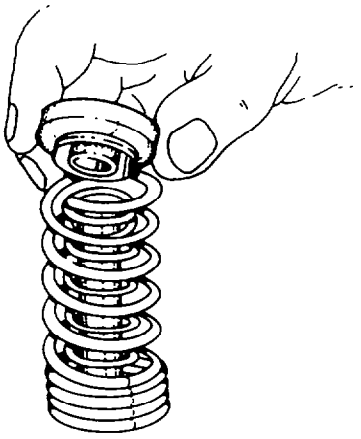

Fig. 48 — Installing Valve Rotators

c. Compress the valve springs and install the valve collets (see fig. 49).

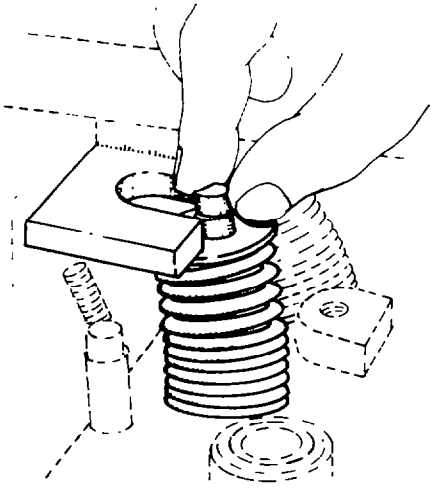

Fig. 49 — Installing Valve Collets

NOTE: After the valves have been assembled into the head, re-check the valve seating seal with a vacuum pump. The gauge must read 635 mm (25 in.) of mercury (minimum). The vacuum pump is then shut off and the gauge reading should not drop more than 76 mm (3 in.) maximum in 5 seconds (see fig. 50).

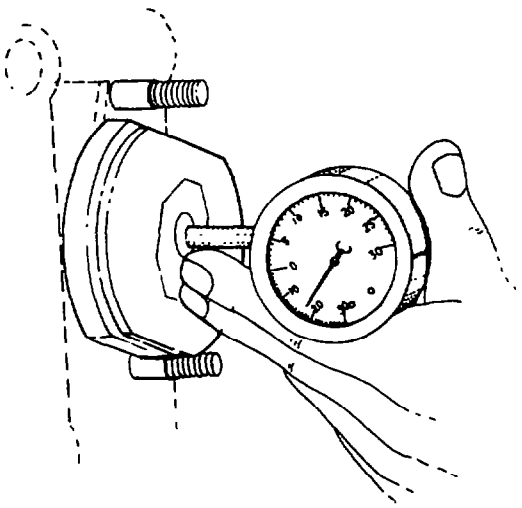

Fig. 50 — Measuring Valve Sealing

d. Install the cylinder heads (refer to EMEI VEH G 704 — Group 1).



## Engine Overhaul

14 Disassembly

a. Remove the air compressor, oil filler pipe and dipstick tube; remove the tachometer drive assembly; remove the fuel injection pump assembly.

b. Remove the accelerator slave cylinder from the engine; remove all cables, linkages and pipework from the engine then fit the engine to a universal engine overhaul stand; ensure that the engine is secure in the stand; remove the cylinder heads (refer to EMEI VEH G 704 — Group 1.)

c. Remove the drain plug from the sump to ensure that all oil has been drained from the engine.

d. Remove the two side covers from the engine block, then remove the generater and mounting brackets.

e. Remove the oil cooler and the oil filter adapter assembly from the block, then remove the air starter.

NOTE: To prevent the crankshaft from rotating, lock-up the engine at the flywheel using a suitable tool.

f. Remove the bolts securing the vibration damper and pulley to the hub on the crankshaft; remove the damper and pulley.

g. Remove the centre bolt and thrust plate securing the hub to the crankshaft; use a suitable puller to remove the hub, then remove the hub key from the crankshaft; remove the timing gear case cover.

h. Slacken off the bolts securing the flywheel to the crankshaft; do not remove the bolts completely at this stage; invert the engine so that the sump is uppermost.

i. Remove the locknut securing the injection pump drive gear and hub to the engine; if necessary use a suitable puller to remove the hub and gear from the shaft; remove the key from the shaft (see fig. 51).

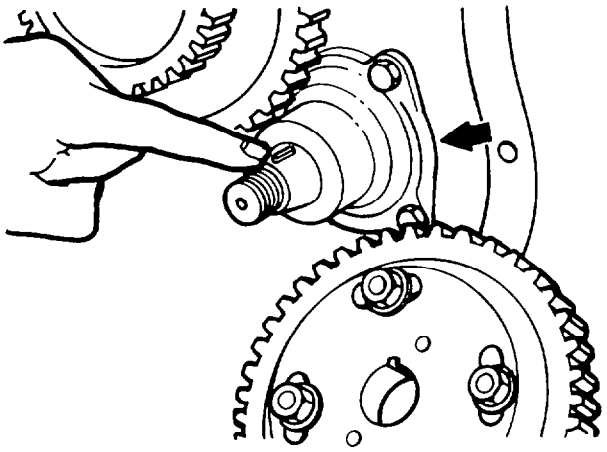

Fig. 51 — Injection Pump Drive Shaft Key Location



j. Remove the injection pump drive shaft from the block, then remove the pump drive shaft housing.
k. Bend the lock-tab away then remove the nut securing the air compressor drive coupling to the auxilliary drive shaft; remove the coupling and the oil pump drive gear from the shaft; remove the coupling key from the shaft (see fig. 52).

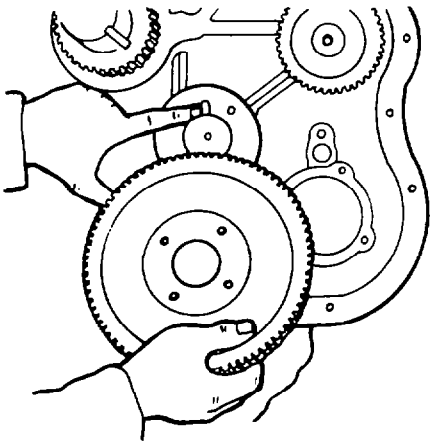

Fig. 52 — Auxiliary Shaft Key Location

l. Withdraw the auxilliary drive shaft from the engine block.
m. Remove the camshaft and drive gears from the block; rotate the camshaft as necessary so that the cams clear the bearings and tappets; remove the gears from the camshaft then remove the key from the shaft.
n. Use a suitable puller to remove the drive gear from the crankshaft; then remove the keys from the shaft.

> *WARNING*
> *The flywheel is a heavy unit and could cause severe injury to personnel or damage to the unit if dropped or mishandled during removal.*

o. Attach an overhead lifting device to the flywheel; remove the bolts securing the flywheel to the crankshaft then remove the flywheel taking care to avoid damage or injury; lower the flywheel to the floor.

p. Remove the bolts securing the flywheel housing to the engine block, then detach the housing.

q. Remove the sump bolts then remove the sump from the crankcase; remove the oil pump and strainer.

r. Remove the bolts from each big-end cap in turn, then remove the caps from the connecting rods.

NOTE: When removing the pistons and connecting rods from the cylinders, the big-ends must be rotated in turn and guided to avoid damaging the oil spray nozzles for the piston under-crown cooling.

s. Rotate the big-ends in turn so that they clear the oil spray nozzles, then using a suitable soft drift press the pistons and connecting rods out of the cylinders until the top ring protrudes just beyond the block deck.

t. Take a firm grip on the piston and withdraw each piston and connecting rod in turn.

u. Remove the bolts from the main bearing caps in turn, then remove the caps; remove the rear main seal housing (see fig. 53).

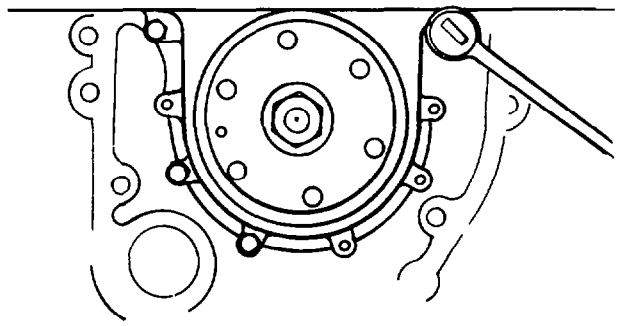

Fig. 53 — Removing Rear Main Seal Housing

v. Install and tighten one of the flywheel retaining bolts into the flange at the flywheel end of the crankshaft; attach a suitable sling to an overhead lifting device then attach one end of the sling around the bolt in the flange and the other end around the spigot at the front of the crankshaft.

w. Using the overhead lifting device, raise and remove the crankshaft; move the crankshaft to one side then lower it onto two wooden V-blocks to prevent it from rolling around on the floor; remove the sling and bolt from the crankshaft.

x. Remove the oil spray nozzles from inside the crankcase (see fig. 54); remove the cam followers.

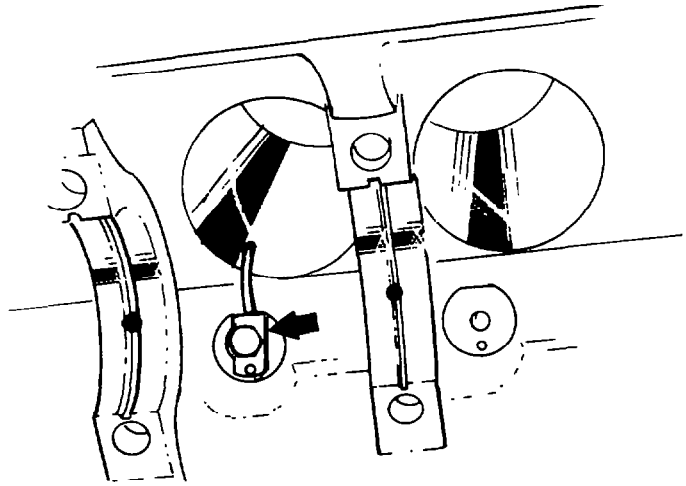

Fig. 54 — Removing Oil Spray Nozzles

y. Use tool J-25065 to remove the cylinder liners from the engine block (see fig. 55).

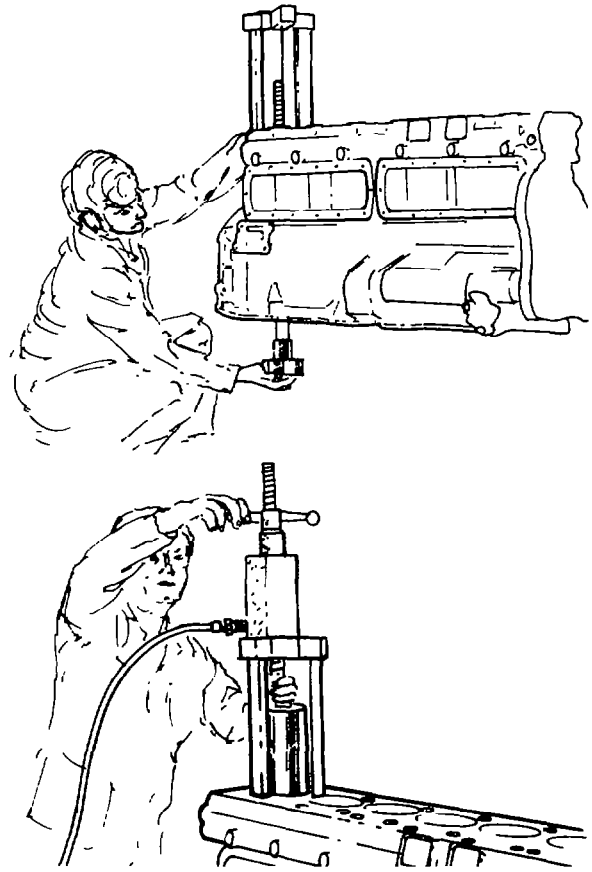

Fig. 55 — Removing Cylinder Liners

z. Position the mounting stand above the cylinder.

> *CAUTION:*
> *Extreme care must be taken to ensure that the withdrawal plug is correctly positioned and aligned in the bottom of the liner, to prevent damage to the bore when the liner is removed.*

aa. Carefully position the withdrawal plug in the liner then fit the air actuated jack onto the mounting stand; tighten the wing-nut over the puller.

ab. Operate the air jack and withdraw the liner from the block; the wing-nut may have to be tightened down a number of times and pressure applied until the liner is out of the block.

ac. Remove the remaining liners in the same manner, then remove the gallery plugs and core plugs from the block; remove the camshaft bearings using tool J-21428-01, then remove the auxiliary shaft bearings using tool J-21428.

ad. Use a fine honing stone to lightly hone the block bores, then clean and inspect the block.

ae. Machine the block as required, using standard machine shop techniques.

NOTE: It is of vital importance that all machining residue and waste is removed from the block after machining.

af. Clean the block again, and apply a light coat of clean engine oil to the cylinder and shaft bores, main bearing webs and caps and block deck.

ag. Clean and inspect all remaining engine components; replace components showing signs of wear or damage; apply a coat of clean engine oil to all internal components, and protect those components not immediately required by covering them with oil impregnated paper or cloths.

15 Reassembly

a. Fit the engine block to a universal engine overhaul stand; ensure that the block is secure in the stand.

b. Fit new O-rings to the core plugs then install the plugs in the block; fit new gaskets to the oil gallery plugs then install them in the block.

16 Cylinder Liners

a. Measure the internal diameter of the block bore, then measure the outer diameter of the replacement liner to ensure a correct fit.

NOTE: If the liner is within specifications and enters the block between half and two-thirds of the way into the bore, a steady even push will force it into position.

b. Press the liner into the block until it is approximately half an inch above the deck; blow out the counterbore with compressed air, then press the liner fully home. Repeat this procedure to install the remaining liners; measure the internal diameter of the liners to ensure that they remain within specifications.

NOTE: If the shoulder height of the liner is below the specified minimum, shims must be inserted in the counterbore under the shoulder flange. If more than one shim is required, place the thickest shim at the bottom.

c. Measure the liner heights to ensure that they fall within specifications (see Table 3); measurements are taken from the bottom of the fire-ring groove in the shoulder of the liner to the surface of the deck (see fig. 56).

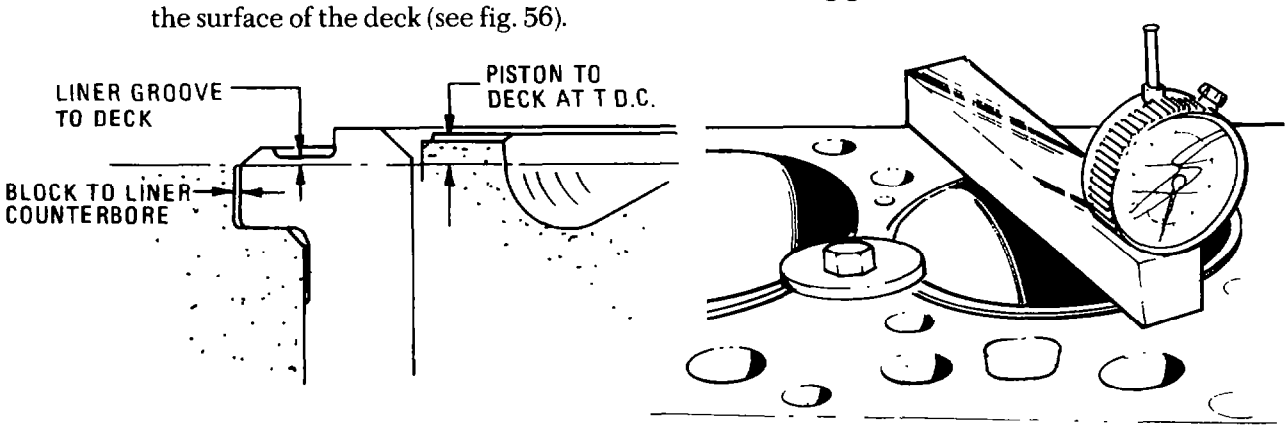


Fig. 56 — Cylinder Liner and Piston Relationship to Block

d. Secure the liners in the block temporarily, using flat washers and bolts (see fig. 57).

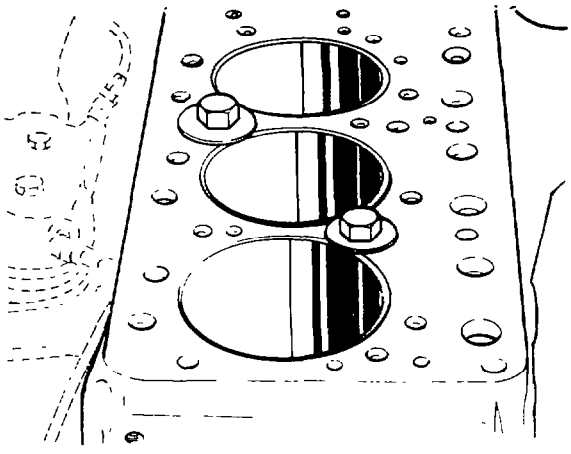

Fig. 57 — Securing Liners

e. After securing the liners in the block, hone the liners in turn using fine honing stones (400 grit or finer) and a suitable lubricant such as clean kerosene. Hone the liners in such a way as to obtain a diamond criss-cross pattern evenly throughout the length of the liner.

f. After honing, wash the liners with a solution of household detergent and scrub the liners with a stiff bristle brush to remove as much of the honing debris as is possible. Rinse thoroughly with hot water then blow-dry with compressed air. Mineral spirits WILL NOT satisfactorily clean the bores after honing and unless the bores are cleaned as has been detailed, premature engine failure could result.

g. Coat the bores with clean engine oil; use a clean white cloth or paper towel to wipe the bores; if grey (or darker) stains are evident on the cloth or towel this indicates that honing debris is still present on the liners. Repeat the oil application and wiping procedure until no evidence of stain appears on the cloth or towel.

h. Coat the liners with a thin film of clean engine oil.

17 Oil Spray Nozzles

a. Install the oil spray nozzles for the piston undercrown cooling; ensure that the dowel pin in the nozzle body is aligned with the recess in the block. Install the banjo-bolt and tab washer; tighten the banjo-bolt and secure it in position by bending down the locking tab on the washer.

b. Using tool J-22963 check that the nozzles are correctly aimed (see fig. 58).

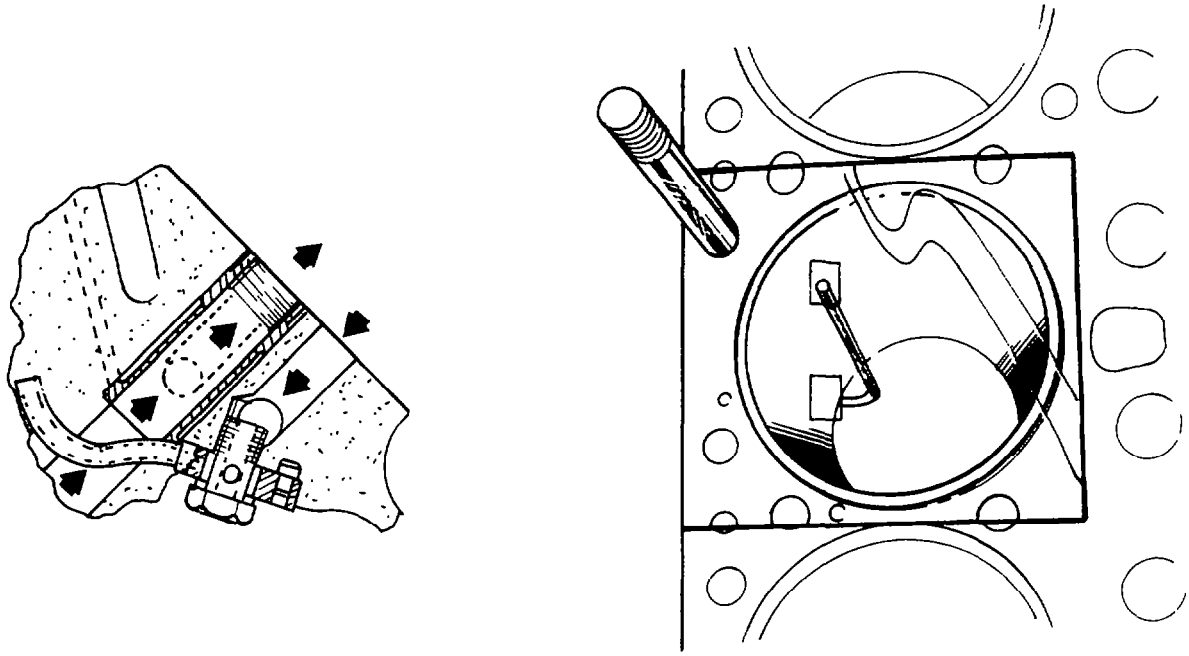

Fig. 58 — Aligning Oil Spray Nozzles

NOTE: If the indicator rod points over one inch off the target area, the nozzles must be replaced.

c. If the indicator rod points slightly off target, bend the nozzle at the hooked end only, until the rod points within the target area. From this point onwards take extreme care to maintain nozzle alignment.

18 Camshaft and Bearings

a. Rotate the block until the crankcase is uppermost.

NOTE: 1. There are two camshaft bearing widths, the front bearing being wider than the other bearings.

2. A new camshaft with a No. 7 journal diameter of 60.706 – 61.976 mm (2.390 – 2.440 in.) has been released. This camshaft will fit all engines after the No. 7 journal, thick wall bearing has been replaced with a standard wall bearing. Check the diameter of the No. 7 journal on the camshaft and fit the appropriate bearing into the engine block.

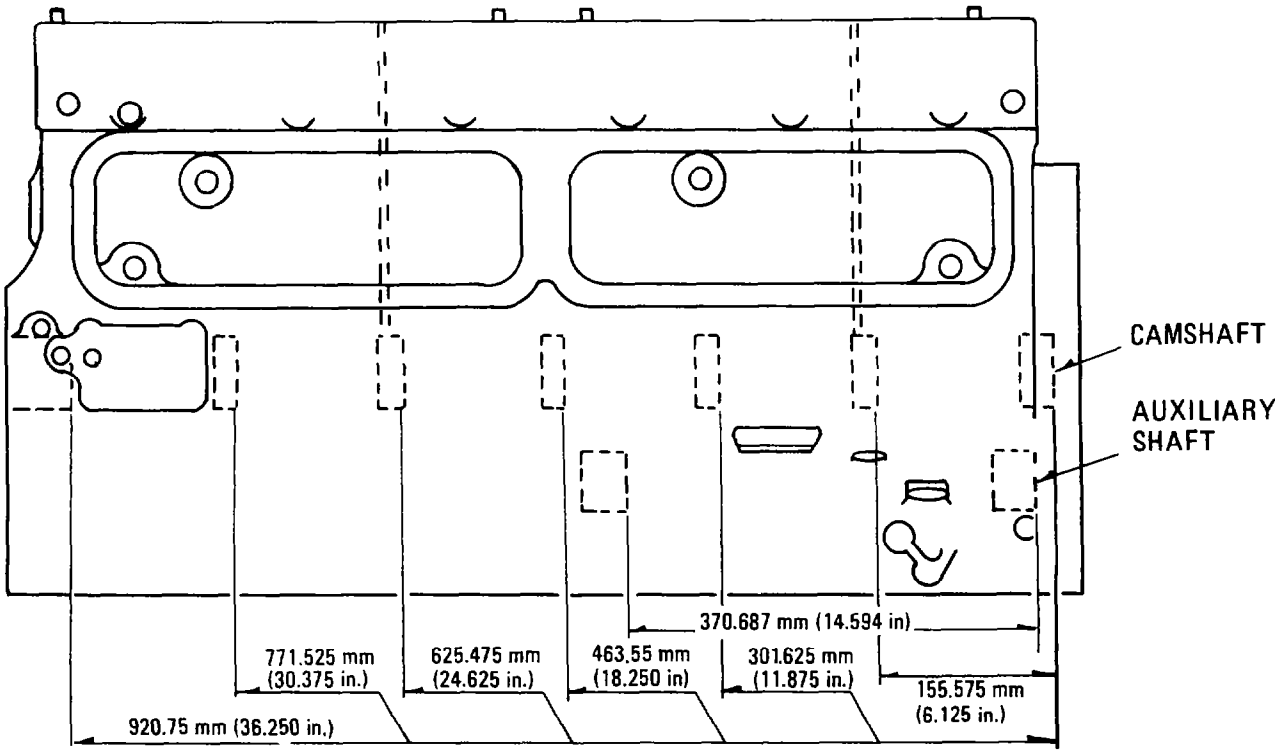


Fig. 59 — Camshaft Bearings — Installation Distances

NOTE:

3. All the bearings must be installed so as to locate at set distances measured from the thrust washer mounting surface to the forward edge of the bearings (see fig. 59). The thrust washer must be removed when locating the bearings.
4. The oil supply holes in the block must align with the oil holes in the bearings (see fig. 60).

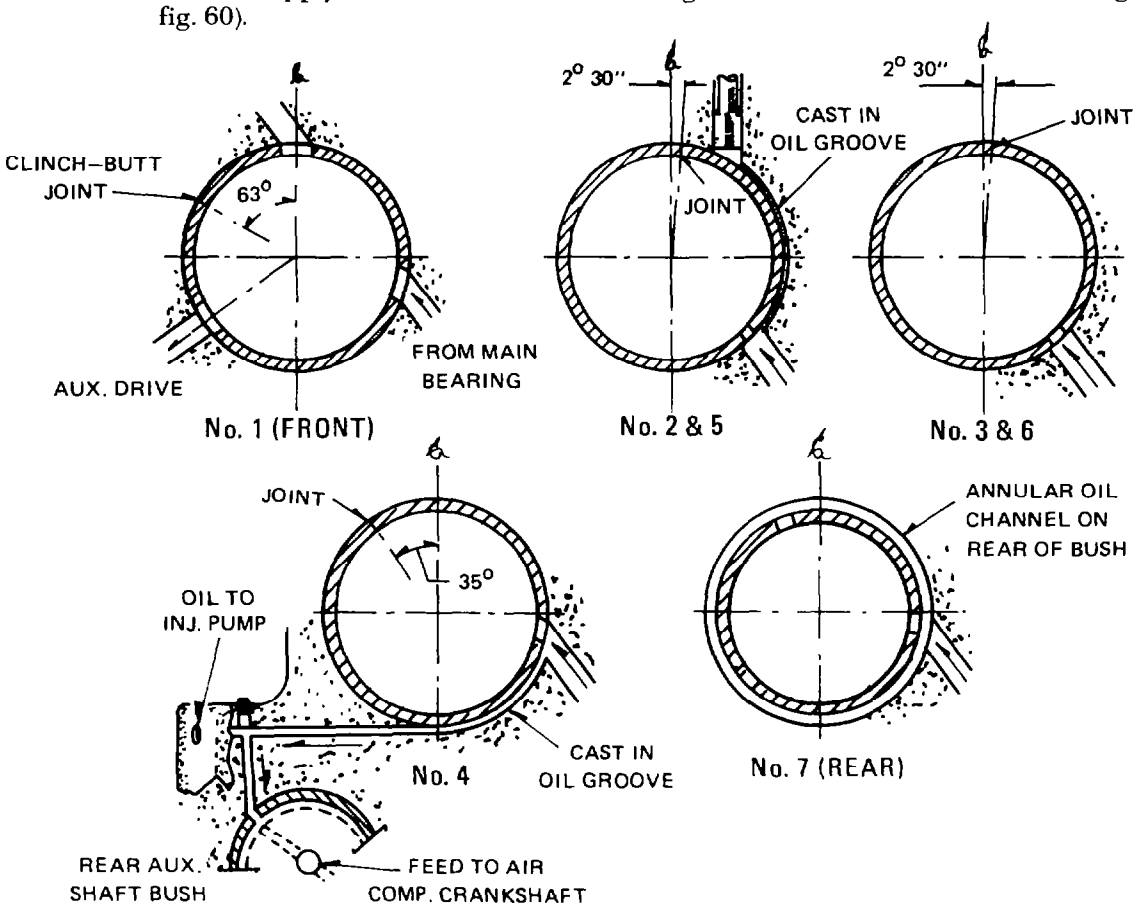


Fig. 60 — Camshaft Bearings — Oil Hole Alignment

b. Use tool J-21428-01 to install the new camshaft bearings in the block (see fig. 61); after the bearings are in place measure the I.D. of the bearings to ensure that they are not undersize due to burrs on the O.D. caused by installation.

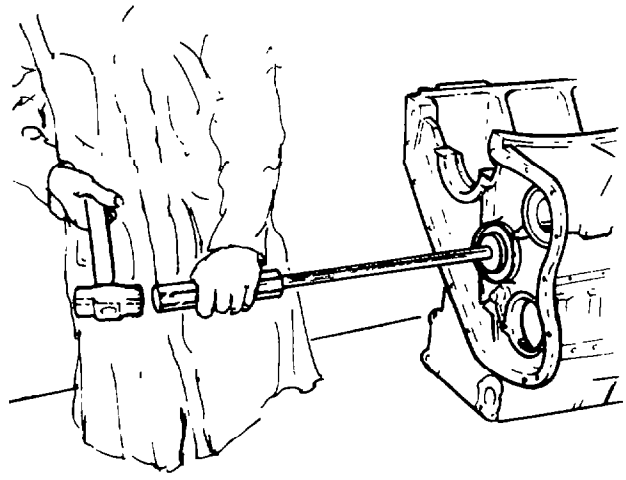

Fig. 61 — Installing Camshaft Bearings

c. Fit the thrust washer in the counterbore at the front of the block; install the washer retaining pins ensuring that they do not protrude beyond the surface of the thrust washer.

d. Install the tappets in their tunnels; check that the tappets rotate freely and slide easily in the tunnels. Install the camshaft in the block; turn the camshaft by hand to ensure that it rotates freely in the block.

19 Auxiliary Shaft and Bearings

NOTE: 1. The auxiliary shaft bearings must be installed so as to locate at set distances measured from the thrust washer mounting surface to the forward edge of the bearings. The thrust washer must be removed when locating the bearings (refer to fig. 59).

2. The front bearing has an oil groove cut into the metal; the groove extends for approximately 140° from the oil hole.

a. Mark the edge of the rear bearing to enable the correct positioning of the oil hole during installation (see fig. 62).

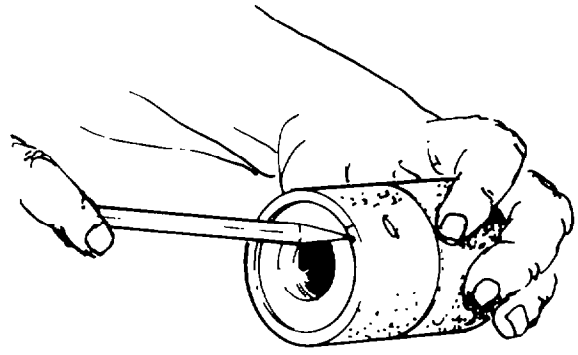

Fig. 62 — Marking Rear Bearing

b. Use tool J-21428 to install the bearing in the block, ensure that the oil hole and clinch-butt joint are correctly positioned (see fig. 63).

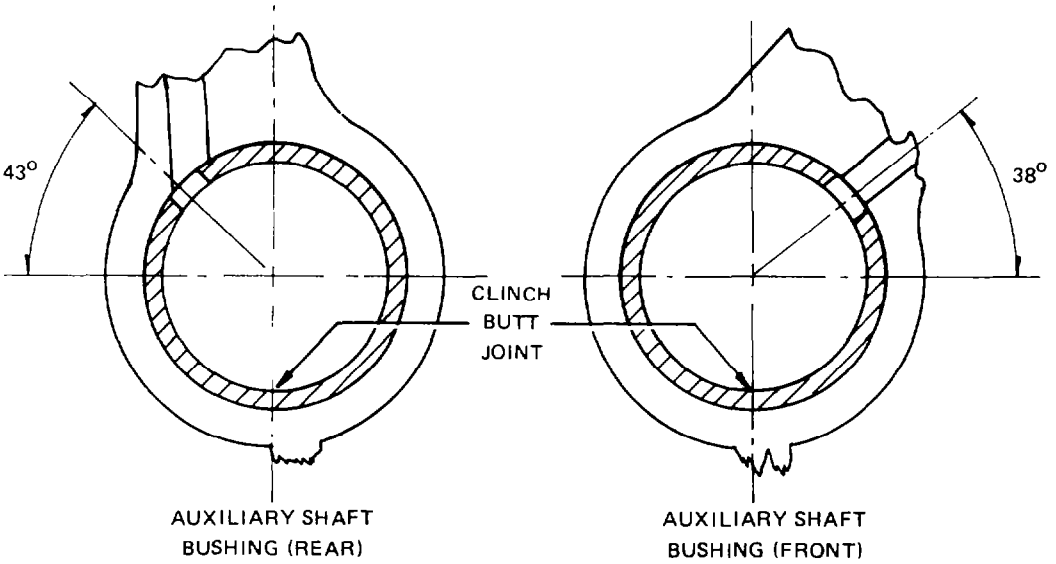


Fig. 63 — Oil Hole Alignment

c. Install the front bearing using tool J-21428 ensuring that the oil hole and clinch-butt joint are correctly positioned as shown in fig. 63.
d. Fit the thrust washer in the counterbore in the block; install the washer retaining pins ensuring that they do not protrude beyond the surface of the thrust washer.
e. Fit the key to the drive coupling for the air compressor then fit the oil pump drive gear to the coupling; fit the coupling to the auxiliary shaft; if necessary use a soft, hollow drift to drive the coupling fully home on the shaft (see fig. 64).

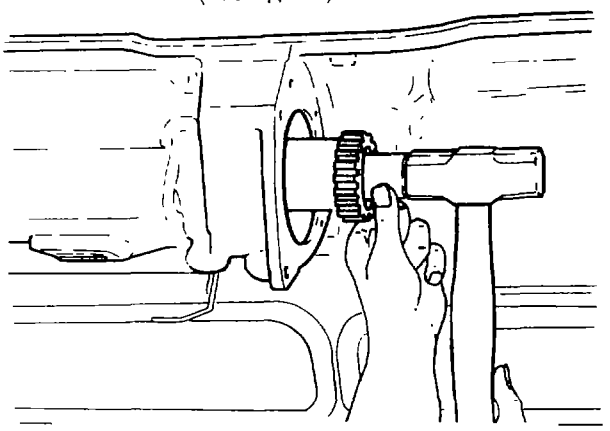

Fig. 64 — Installing Drive Coupling

f. Fit the tab washer and nut to the shaft; torque the nut to 150 Nm (110 lb.ft). The tab washer can be reached through the access hole in the coupling; bend the tangs on the tab washer against the nut to secure the nut in place.
g. Rotate the shaft a few times by hand to ensure that it turns freely in the block.

20 Crankshaft and Main Bearings

NOTE: 1. If the crankshaft has been induction tested, it must be de-magnetised before installation in the block.
2. Some shafts may have main journals which are 0.051 mm (0.002 in.) undersize. These are marked by a streak of white paint adjacent to the undersize journal.
3. Measure the main journals on the crankshaft to ensure that the correct size bearings are used.

a. Insert the upper half of the bearing shells (stamped with the word "UPPER" on the back of the shell) into the bores in the crankcase; ensure that the lugs on the shells locate in the notches in the bores, and that the oil hole in the shell aligns with the oil hole in the bore.
b. Insert the lower half of the bearing shells (stamped with the word "LOWER" on the back of the shell) into the main bearing caps; ensure that the lugs on the shells locate in the notches in the bores.

c. Install the key into the groove in the crankshaft spigot; heat the crankshaft drive gear to approximately 120° C in oil, then fit the drive gear to the crankshaft so that the timing marks on the gear are facing the front of the engine. Allow the gear to air cool to ambient temperature.

d. Use a suitable sling attached to the crankshaft and an overhead lifting device; position the crankshaft above the crankcase, then carefully lower it into position. DO NOT rotate the crankshaft.

e. Place a core strip of Plastigauge on top of each main journal; the core strip must be suitable for measuring clearances of between 0.05 mm to 0.101 mm (0.002 in. to 0.004 in.) (see fig. 65).

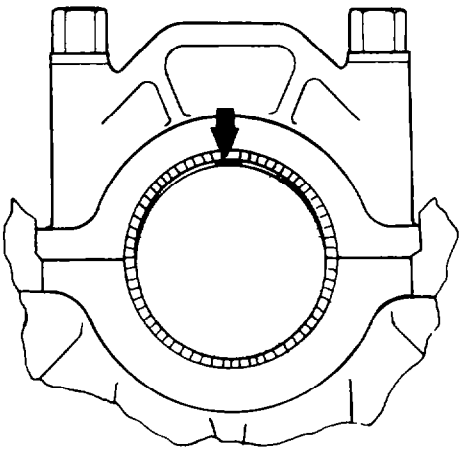

Fig. 65 — Positioning Plastigauge

NOTE: The main bearing caps are numbered in sequence from 1 to 7 to match corresponding numbers stamped into the sump rail. When installed, the numbers on the caps must face the numbers on the sump rail.

f. Fit the main bearing caps to the crankcase; install the retaining bolts and torque them to 270 Nm (200 lb.ft).

g. Remove the retaining bolts from the main bearing caps, then remove the caps; check the width of the Plastigauge strip using the gauge provided. The clearances must be between 0.05 mm and 0.101 mm (0.002 in. and 0.004 in.).

NOTE: If the clearances are not within specifications, measure the crankshaft main journals and check that the correct bearings are being used. Also check for the possibility of dirt, chips or burrs on the back of the shells and on the bearing bores, which could prevent the bearing shells from seating correctly.

h. Remove the crankshaft from the crankcase again; clean the Plastigauge off the crankshaft journals then coat the journals and surfaces of the bearings with fresh engine oil (OMD 115).

i. Fit the crankshaft to the crankcase again; fit thrust washers of standard thickness to No. 4 crankcase main and centre main cap then fit the main caps to the crankcase; install the cap retaining bolts and tighten them until they are just snug.

j. Check the crankshaft end-float using a dial indicator gauge; the end-float must be between 0.101 mm and 0.279 mm (0.004 in. to 0.011 in.); adjust as necessary using thicker or thinner thrust bearings, until the correct end-float is obtained.

k. Remove the bolts from No's 2 and 3, and 5 and 6 main caps.

NOTE: The tie-plate having the chamfered edge must be fitted to No's 2 and 3 main caps on the side of the engine to which the dipstick tube is attached. The chamfer on the tie-plate allows the dipstick to be inserted fully without interference.

l. Position the tie-plate on the main caps (see fig. 66) then install and torque the retaining bolts to 270 Nm (200 lb.ft).

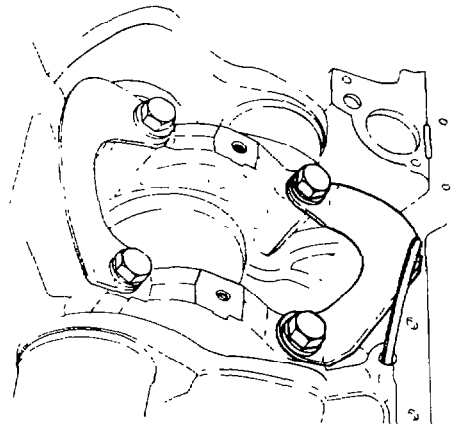

Fig. 66 — Main Bearing Caps — Tie Plates

m. Rotate the crankshaft a few times by hand; the crankshaft must turn freely without evidence of "picking up" or "binding".

21 Timing Gears

a. Fit the key to the groove in the camshaft flange; align the timing mark on the crankshaft gear between the two alignment marks on the camshaft gear then press the camshaft gear fully home on the camshaft.

b. Fit the key to the groove in the injection pump drive gear, then fit the gear to the camshaft; install the retaining bolts and torque to 54 Nm (40 lb.ft) (see fig. 67).

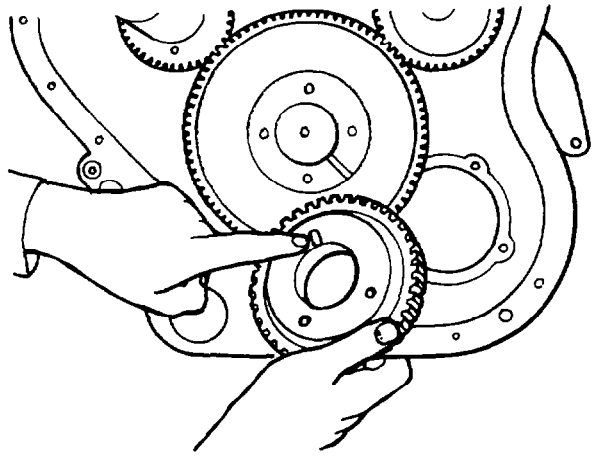

Fig. 67 — Installing Injection Pump Drive Gear

c. Fit the injection pump drive shaft housing to the block; install the retaining bolts and torque to 48 Nm (35 lb.ft) (see fig. 68).

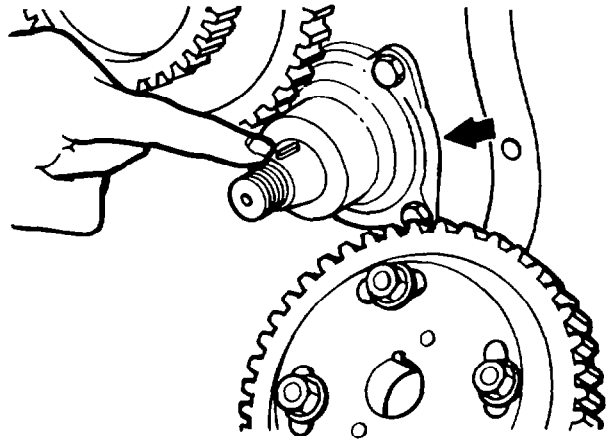

Fig. 68 — Fitting Pump Drive Shaft Housing

d. Insert the injection pump drive shaft through the rear of the housing; fit the key to the shaft; fit the two piece gear to the shaft so that the timing mark on the gear is aligned between the two timing marks on the driving gear (see fig. 69).

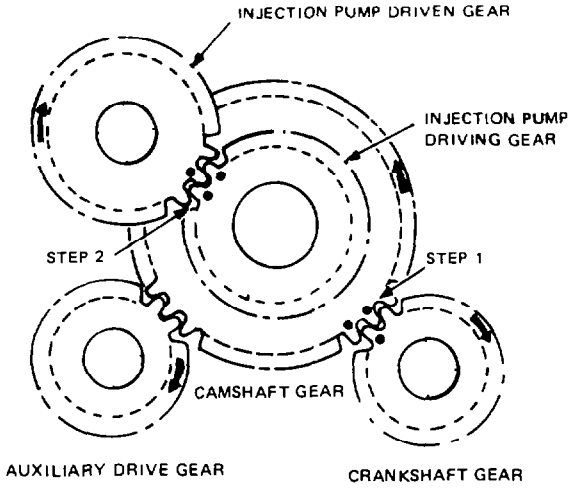


Fig. 69 — Timing Marks

e. Fit the nylok nut to the shaft; lock-up the gears to prevent them from turning then torque the nut to 217 Nm (160 lb.ft).

f. Rotate the engine in the stand until the deck is uppermost; use a dial indicator gauge to measure the backlash between the crankshaft and camshaft gears, between the camshaft and auxiliary drive gears and between the injection pump driving and driven gears as shown in fig. 70. Refer to Table 3 for backlash specifications.

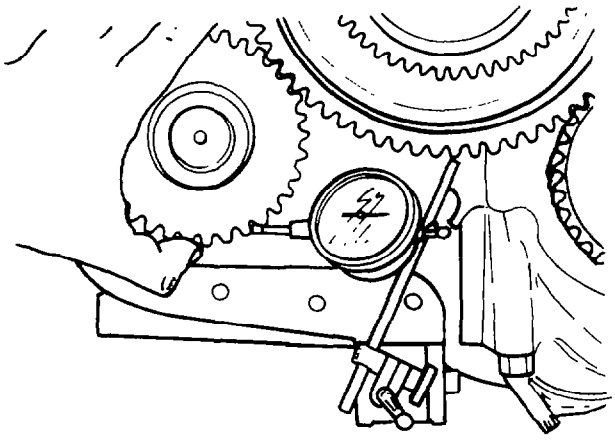

AUXILIARY SHAFT GEAR

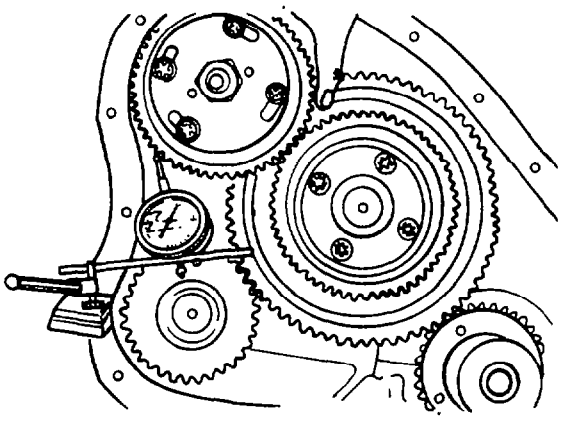

INJECTION PUMP DRIVE GEAR

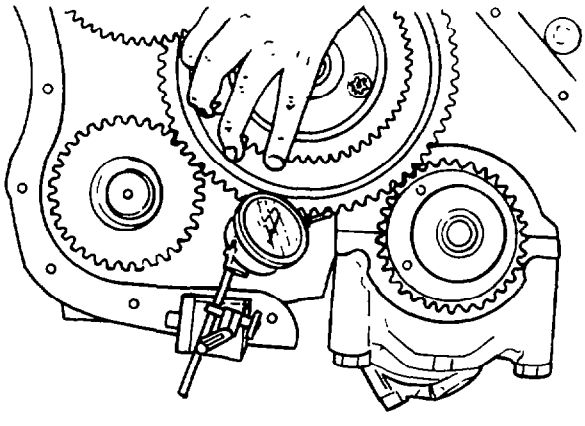

CAMSHAFT DRIVE GEAR

Fig. 70 — Backlash Measurements

22 Rear Main Seal

a. Rotate the engine in the stand so that the crankcase is uppermost.

NOTE: Before installing the rear main seal, measure the radial runout of the crankshaft flange using a dial indicator gauge. The runout must not exceed 0.508 mm (0.002 in.).

b. Coat the mounting surface of the seal housing with silastic sealing compond then position the housing against the block over the crankshaft flange.

c. Install and hand tighten the retaining bolts; use a straight edge to align the flange on the housing to the sump rail. Torque the retaining bolts in a diagonal sequence to 18 Nm (13 lb.ft) (see fig. 71).

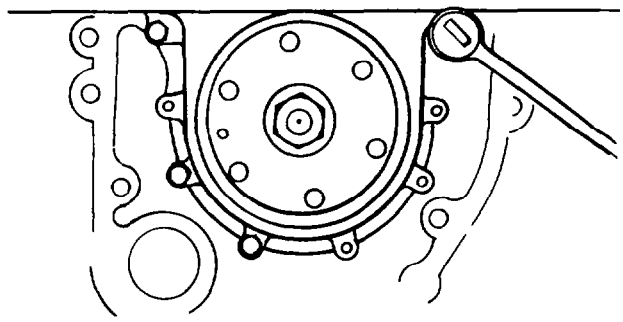

Fig. 71 — Aligning the Seal Housing

d. Using a dial indicator gauge check that the bore in the oil seal housing is concentric with the outer diameter of the crankshaft flange to within 0.177 mm (0.007 in.).

NOTE: 1. The rear main seal is installed using tool assembly J-21384-02 (see fig. 72).

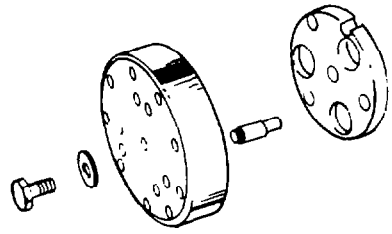

Fig. 72 — Installation Tool Assembly J-21384-02

2. The installer plate contains dowels set at different depths on the inside surface. During seal installation, the dowels seat against the adapter plate to ensure the correct seal installation depth.
3. The guide-stud holes in the installer plate are stamped for different seal installation depths 7.569/7.315 mm (0.298/0.288 in.), 5.029/4.775 mm (0.198/0.188 in.) and 4.064/3.810 mm (0.160/0.150 in.). To install the seal to the desired depth, position the installer plate so that the stud hole which is stamped with the appropriate installation depth number fits over one of the guide-studs.
4. The seal housing counterbore is designed so that the seal can be installed at two different depths; one for production (or a new installation) and one for service after wear occurs at the original seal location.
5. One installation sleeve (513GC28) must be used along with the installer assembly. The sleeve is required for aligning the seal and for protecting it from damage by the chamfer on the crankshaft flange.

e. Attach the adapter plate to the rear of the crankshaft using the three guide-studs; tighten the studs.

NOTE: There are three types of rear main seal in use; ensure that the seal being installed is of the correct type and internal diameter.

f. Lubricate the seal using rubber grease then place the seal over the installation sleeve; position the sleeve and oil seal over the adapter plate so that the sleeve covers the chamfer on the crankshaft flange.

g. Position the installer plate so that the hole stamped with the numbers 0.198/0.188 will fit over a guide-stud; place the installer plate over the adapter.

h. Place the specially hardened flat washer over the centre bolt, then screw the bolt into the adapter plate (see fig. 73).

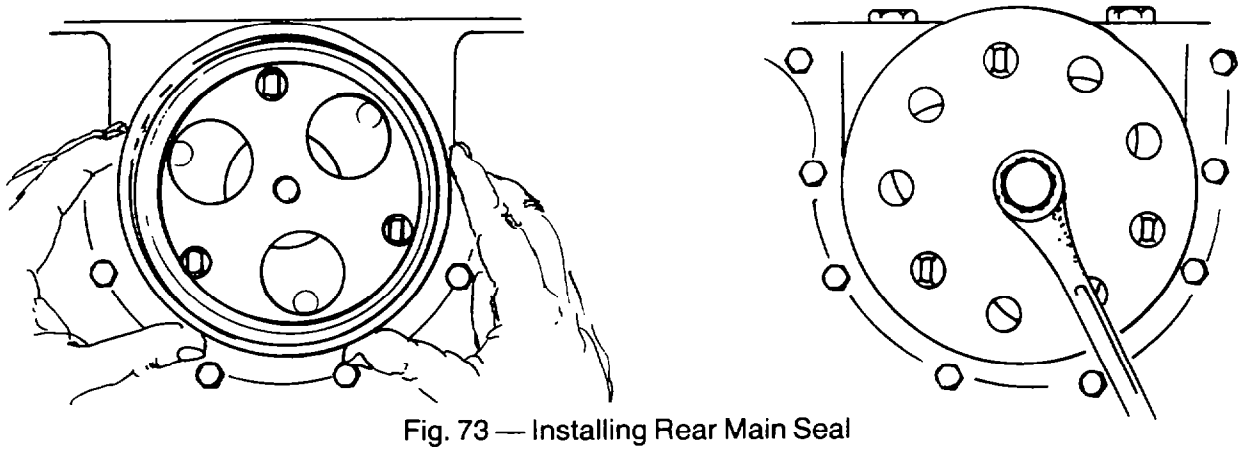

Fig. 73 — Installing Rear Main Seal

> *CAUTION:*
> *Use extreme care during installation to prevent damaging the seal. Damage to the oil seal will result in a major oil leak from the engine.*

i. Use a ring spanner to tighten the bolt until a positive stop is reached, at which time the seal will be positioned at the correct depth.

j. Carefully remove the installer plate and adapter plate; remove the guide-studs from the crankshaft flange. Rotate the crankshaft a few times by hand to ensure that the seal is seating correctly and that there are no high spots.

23 Flywheel Housing

a. Fit two guide-studs to the engine block then position the flywheel housing over the studs against the block.

NOTE: The longer bolts and spacers are used in the holes nearest the sump rail.

b. Assemble and install the two spacers between the engine block and support bracket on the flywheel housing; install the two retaining bolts and hand tighten them; remove the guide-studs as the bolts are installed.

c. Install the remaining mounting bolts in the housing and tighten them until they are just snug; mount a dial indicator gauge on the crankshaft and measure the concentricity of the flange internal diameter (see fig. 74).

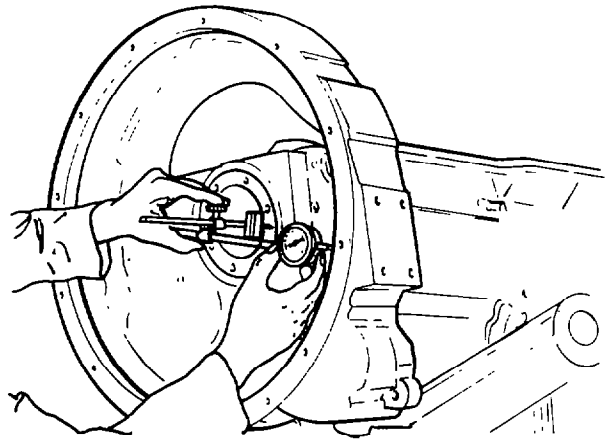

Fig. 74 — Measuring Flywheel Housing Concentricity

d. If the total indicator reading exceeds the specifications, align the housing by tapping it with a large nylon headed hammer; measure for concentricity again and adjust as necessary until the indicator readings are within 0.203 mm (0.008 in.) total indicator reading.

e. Torque the retaining bolts to 230 Nm (170 lb.ft) then measure the housing again to ensure that it has not moved.

f. Mount the dial indicator gauge on the flywheel housing near the support bracket (see fig. 75) then zero the gauge.

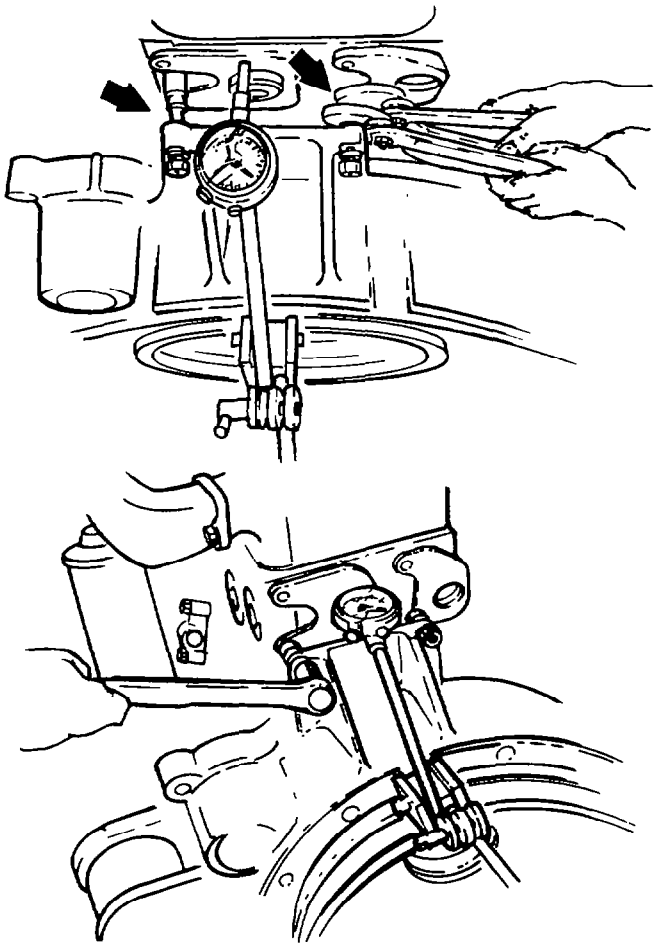

Fig. 75 — Pre-loading Flywheel Housing

g. With the mounting bolts loose, tighten the adjustable spacer finger tight; using suitable pliers, hold the inner half of the spacer and tighten the outer half to a 0.051 mm (0.002 in.) preload deflection on dial gauge.
h. Repeat the preload procedure for the other spacer until 0.102 mm (0.004 in.) total indicator reading shows on the dial gauge.
i. Torque the two mounting bolts to 75 Nm (55 lb.ft) then check the dial gauge again. The correct reading on the dial gauge is ± 0.025 mm ( ± 0.001 in.); if the reading is incorrect repeat paras g. to i., until the correct reading is obtained.

24 Flywheel

a. Install two guide-studs in the crankshaft flange at the 9 o'clock and 2 o'clock positions; position the flywheel over the studs, so that the locating lug in the flywheel is aligned with the mating hole in the crankshaft flange; install four mounting bolts and washers; tighten the bolts until they are snug.
b. Remove the two guide-studs then install the remaining bolts and washers; torque all the mounting bolts in a diagonal sequence to 258 Nm (190 lb.ft).
c. Use a dial indicator gauge to check the run-out of the flywheel face; mount the dial gauge on the flywheel housing with the gauge finger against the outer edge of the flywheel face.
d. Rotate the crankshaft and note the dial gauge readings; maximum run-out or face wobble is 0.025 mm (0.001 in.) per 25.4 mm (1 inch) of flywheel radius.
e. Mount the dial gauge on the fywheel housing in such a way as to be able to measure the runout of the basic bore of the spigot bearing.
f. Rotate the crankshaft and note the dial gauge readings; maximum run-out is 0.127 mm (0.005 in.). If either of the readings mentioned exceeds specifications, the flywheel must be re-surfaced or replaced.

NOTE: The flywheel is manufactured with a central through-bore and counterbore to facilitate the correct positioning of the snap-ring type spigot shaft bearing. Use the snap-ring type bearings only, for this pattern of flywheel.

g. Use a suitable mandrel to install the spigot bearing; the snap-ring must butt fully against the collar in the flywheel counterbore. DO NOT damage the bearing seal during this procedure.

> *CAUTION:*
> *To prevent grease seepage and to prevent damaging the bearing seal after the transmission is fitted to the engine, the space in the grease cavity occupied by the spigot shaft nose must not be filled with grease.*

h. Pack the grease cavity behind the bearing with multipurpose grease (XG 274) (see fig. 76). Tape over the bearing to prevent ingress of dirt or foreign material.

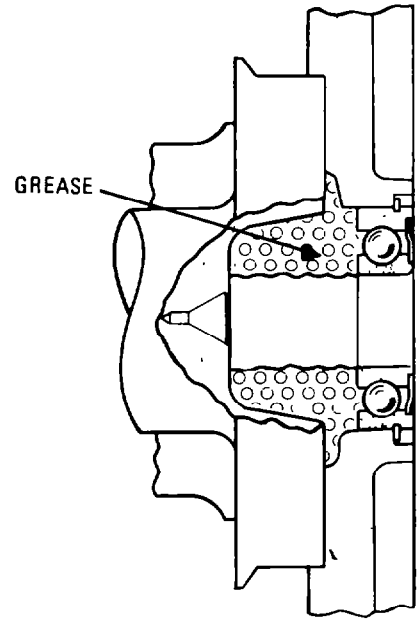


Fig. 76 — Packing Grease Cavity

25 Pistons and Connecting Rods

a. Examine the connecting rods for any nicks or gouges which could cause rod failure; questionable rods must be replaced.

b. Measure the diameter of the piston; take the measurement across the major axis of the piston skirt approximately 12 mm (0.5 in.) below the oil-control ring groove (see fig. 77). Measure the internal diameter of the cylinder bore and compare the two measurements to obtain the piston-to-liner running clearance; the measurements must be within specifications (refer to Table 3). Stamp the cylinder number into one of the valve recesses in the piston crown. Repeat this process for each piston.

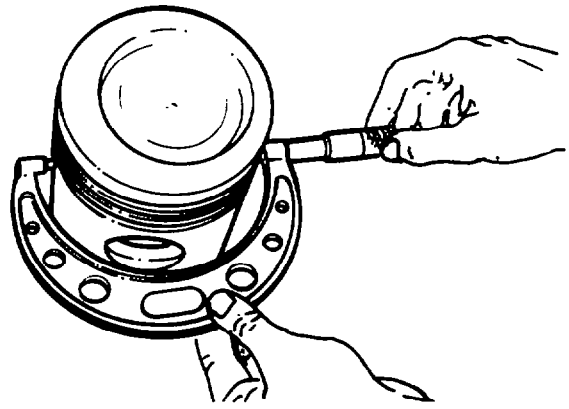

Fig. 77 — Measuring Piston

c. Check the ring-gap of each piston ring individually in the cylinder bore; use an inverted piston to push each ring separately into the bore in which it will be used.
d. Use a feeler gauge to measure the ring-gap of each piston ring in turn; if the ring-gap is not within specifications, check the ring in another bore or obtain a new ring (refer to Table 3).
e. Use a suitable ring expander to install the piston rings in their repective grooves; the identification marks on the rings must face upwards towards the piston crown.
f. In order to prevent excessive oil consumption or blow-by, stagger the ring-gaps so that they are approximately 90° apart.
g. Use a feeler gauge to measure the ring side clearances in their respective grooves; the Keystone rings must have a side clearance of not more than 0.152 mm (0.006 in.) measured with the ring face flush with the piston (see fig. 78).

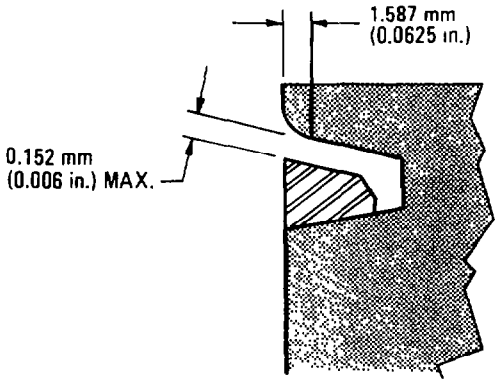


Fig. 78 — Side Clearance Measurements — Keystone Rings

h. For the rectangular compression rings and oil control rings, measure the side clearance in the same manner; the clearance must not exceed 0.104 mm (0.0045 in.) (see fig. 79).

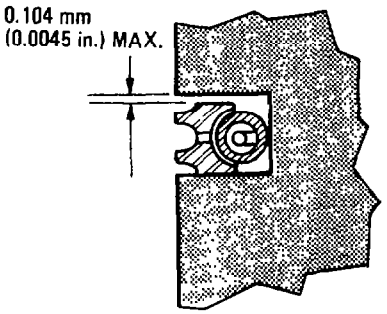


Fig. 79 — Side Clearance Measurements — Rectangular Rings

i. Heat the piston in oil to approximately 94° C (200° F); position the piston on the connecting rod so that the arrow on the piston crown is in the same relation to the forged "FRONT" marking on the connecting rod.
j. Coat the gudgeon pin with clean engine oil (OMD 115), then hand press-fit the gudgeon pin into position; install circlips on each side of the gudgeon pin to secure it in position; the circlips must be installed with the sharp edges facing outwards.
k. Fit the upper bearing shell to the big-end cap; coat the bearing surfaces with clean engine oil (OMD 115); ensure that the bearing shells are properly seated.
l. Coat the piston, rings and cylinder bore with clean engine oil (OMD 115); use a suitable ring compressing tool to compress the piston rings, or use tool J-23442 for this purpose.
m. Insert the piston and connecting rod in the respective bore; the arrow in the piston crown and the word "FRONT" on the connecting rod must be facing the front of the engine.
n. Rotate the crankshaft until the respective crankpin below the bore is at B.D.C.

*CAUTION:*
*1. In order not to damage the piston oil cooling nozzles, rotate the piston approximately 15° so that the big-end will clear the nozzle (see fig. 80).*

*2. Use extreme care during installation, to prevent the loose end of the connecting rod from damaging the cylinder bore and crankpin.*

*3. Do not force the piston into the cylinder; an excessively tight fitting piston indicates a misaligned or incorrectly seated piston ring.*

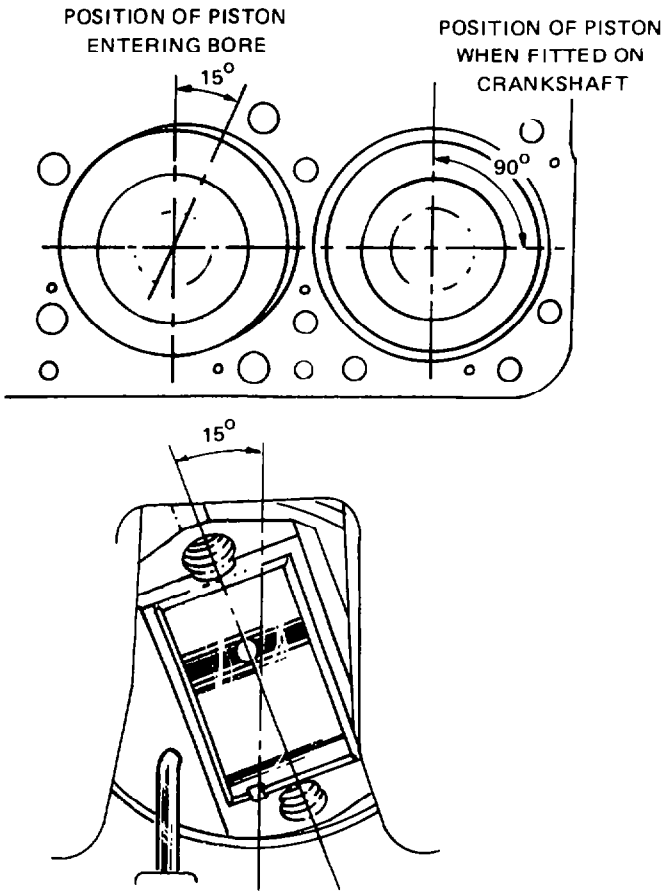


Fig. 80 — Offsetting Piston and Connecting Rod

o. Using a firm, steady pressure, push the piston and connecting rod into the cylinder until the piston is approximately half-way into the cylinder.

p. Using tool J-21480 draw the connecting rod downwards,as as shown in fig. 81, and at the same time guide it past the piston cooling nozzle; position the big-end over the crankpin.

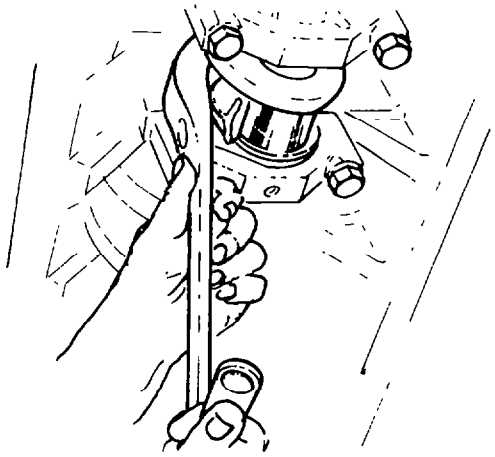

Fig. 81 — Positioning Connecting Rod over Crankpin

NOTE: The bearing running clearances must be measured using Plastigauge in a similar manner as was done for the main bearings (see para. 20).

q. Place a core strip of Plastigauge on top of the crankpin; the core strip must be suitable for measuring clearances of between 0.025 mm and 0.101 mm (0.001 in. to 0.003 in.).

NOTE: The big-end caps and connecting rods are numbered in sequence with the corresponding cylinder numbers. When fitting the caps to the connecting rods ensure that the numbers are matched and are on the same side.

r. Install retaining bolts for the big-end cap and torque them to 203 Nm (150 lb.ft).

s. Remove the retaining bolts from the big-end cap then remove the cap; check the width of the plastigauge strip using the gauge provided. The clearance must be between 0.025 mm and 0.101 mm (0.001 in. and 0.003 in.).

NOTE: If the clearances are not within specifications, measure the crankpin and check that the correct bearings are being used. Also check for the possibility of dirt, chips or burrs on the back of the shells and on the bearing bores which could prevent the bearing shells from seating correctly.

t. Clean the Plastigauge from the crankpin, then push the piston back into the cylinder until the big-end just clears the crankpin; coat the crankpin and bearing shells with clean engine oil (OMD 115).

u. Refit the connecting-rod and cap to the crankpin; install and tighten the retaining bolts until they are just snug; insert two strips of 0.101 mm (0.004 in.) shim stock between the big-end and crankpin webs (see fig. 82).

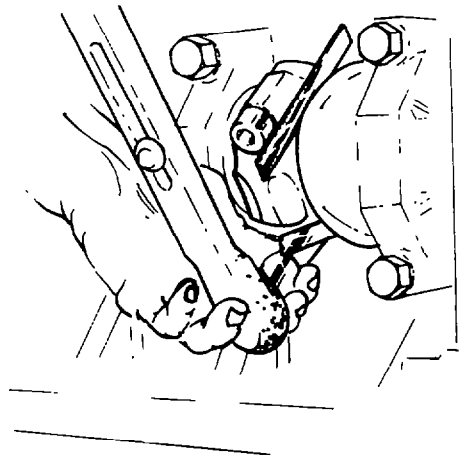

Fig. 82 — Aligning Big-end Caps

v. Use a nylon headed hammer to tap the big-end against the shims to correctly align the cap to the connecting rod. With the shim stock left in position torque the retaining bolts to 203 Nm (150 lb.ft), then remove the shim stock. Manually check the big-end side clearance.

NOTE: The clearance between the piston cooling nozzle and piston skirt must be measured using a fabricated "GO NO GO" gauge (see fig. 83). The clearance must be measured with the respective piston at the B.D.C. position.

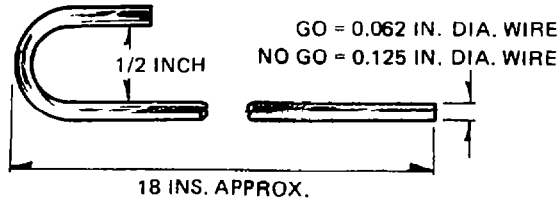


Fig. 83 — GO NO GO Gauge

w. Slide the GO gauge over the nozzle and check the clearance between the tube and piston skirt, then repeat with the NO GO gauge. The GO gauge indicates the correct clearance while the NO GO gauge indicates insufficient clearance (see fig. 84).

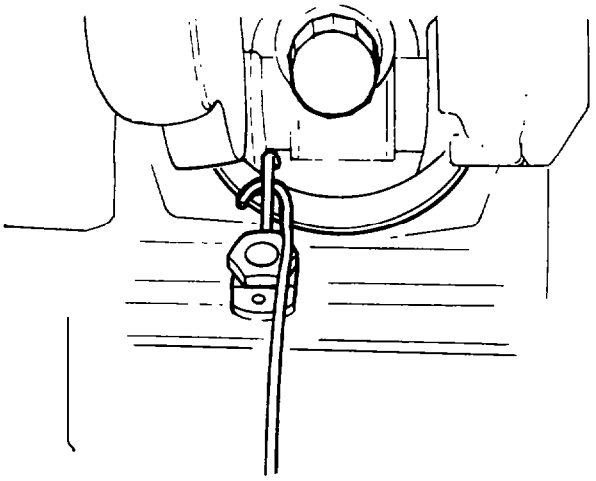

Fig. 84 — Checking Oil-spray Nozzle Clearance

x. If either gauge indicates incorrect clearance, bend the tube as required, then measure the clearance again; take care not to offset the tube to the side of its targeted area during this procedure.

y. Rotate the crankshaft until the piston is at T.D.C; use a dial gauge and measuring block to check the piston bump clearance; the maximum extension of the piston above the block deck must not exceed 0.508 mm (0.020 in.) (see fig. 85).

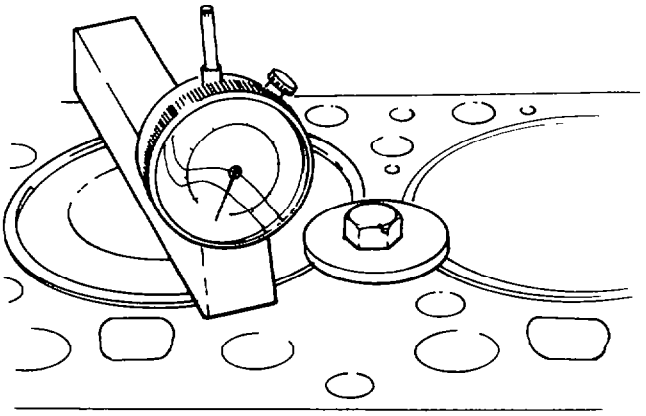

Fig. 85 — Measuring Piston Extension (Bump Clearance)

z. Repeat the installation procedure for the remaining pistons and connecting rods; after installing the six pistons and connecting rods, rotate the crankshaft by hand a few times to ensure that the components are not binding or picking-up.

26 Timing Case Cover

a. Use tool J-24230 to fit the front main seal into the timing case cover; drive the seal into the cover until it butts fully against the seating collar (see fig. 86).

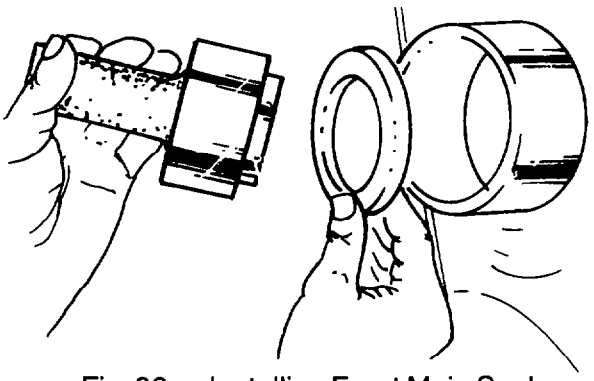

Fig. 86 — Installing Front Main Seal

b. Fit the thrust buttons for the camshaft and auxiliary shaft to the inside of the cover; fit the adjusting bolts and locknuts to the buttons, then adjust the buttons to the fully retracted position so that the buttons butt against the inside of the cover (see fig. 87).

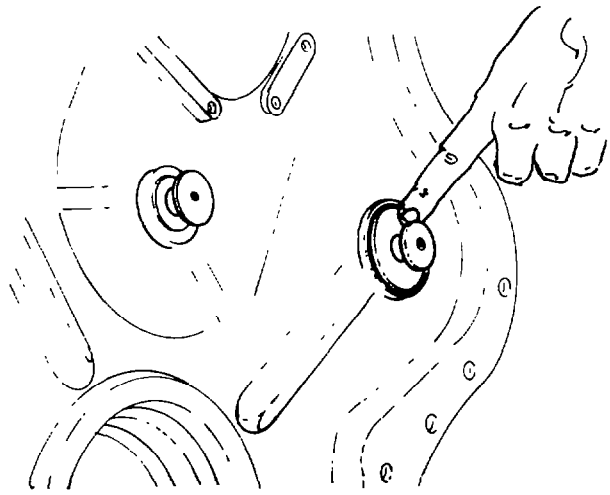

Fig. 87 — Installing Thrust Buttons

c. Install two guide studs in the timing case rail to assist in the aligning of the cover; coat the gasket with grease (XG 274), then position the gasket over the studs onto the timing case rail.
d. Fit the centring sleeve (tool J-26583) to the cover; position the cover over the guide studs against the timing case rail, then install two retaining bolts and screw them down finger tight.
e. Tap the cover lightly with a nylon headed hammer and using a straight edge, align the cover with the sump rail (see fig. 88).

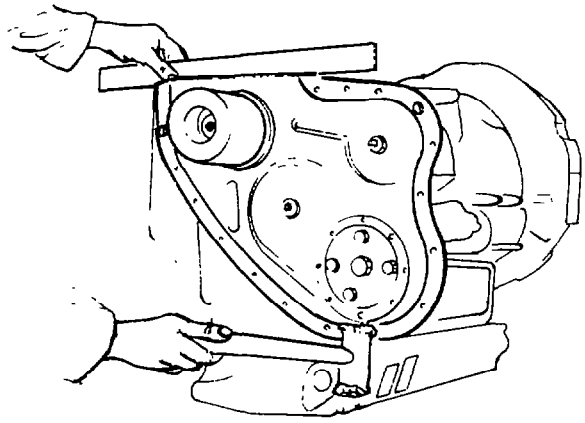

Fig. 88 — Aligning Timing Case Cover

f. Install the retaining bolts and torque them in a diagonal sequence to 39 Nm (29 lb.ft); remove the guide studs then install and tighten the two remaining bolts.

NOTE: The thrust button for the auxiliary shaft is adjusted after the air compressor has been installed.

g. Screw in the adjusting bolt for the camshaft thrust button until the button is just snug against the shaft, then back out the adjusting bolt a quarter turn and tighten the locknut to secure the adjusting bolt in place. Remove the centring sleeve from the cover.

27 Vibration Damper, Hub and Pulley

a. Insert the hub key into the keyway in the crankshaft spigot; heat the hub in oil to approximately 120 °C (250 °F).
b. Align the hub to the shaft, then drive the hub onto the shaft; install the thrust plate and centre bolt then torque the centre bolt to 407 Nm (300 lb.ft).
c. Allow the hub to cool to ambient temperature then check the torque loading of the centre bolt and tighten to the correct setting if necessary.

NOTE: The bolt holes in the pulley and vibration damper will only align one way with the holes in the hub.

d. Position the pulley and vibration damper over the thrust plate securing the hub to the crankshaft (see fig. 89); install the retaining bolts and torque them to 62 Nm (45 lb.ft).

NOTE: The vibration damper is marked to show TDC relative to No. 1 piston when on the compression stroke. If the timing pointer is bent or misaligned it would cause improper engine timing and lead to other problems.

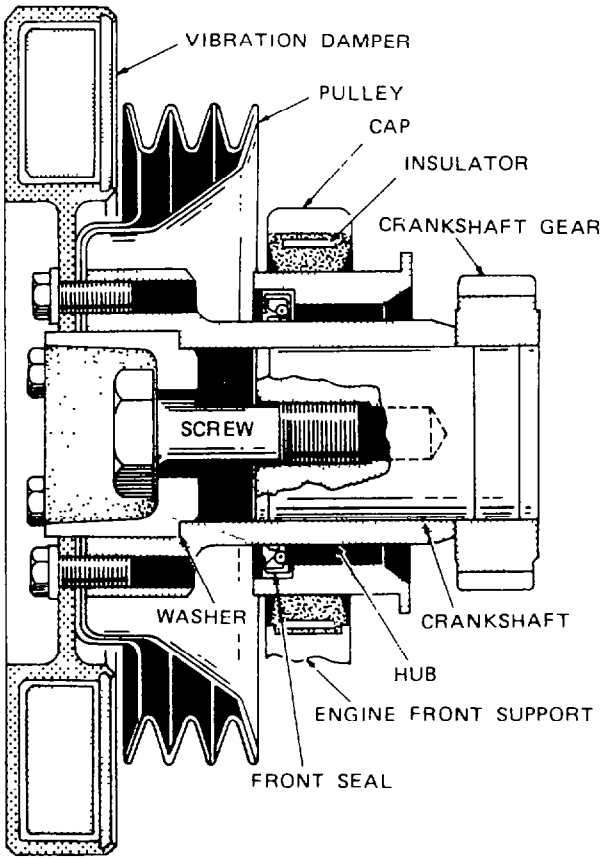


Fig. 89 — Vibration Damper, Hub and Pulley

e. Fit the timing pointer to the timing case.
f. Rotate the crankshaft until No. 1 piston is at TDC; check that the timing mark (TDC) on the pointer coincides with the TDC mark on the vibration damper; if the marks do not coincide the pointer must be adjusted.
g. Place a measuring block and dial indicator gauge over No. 1 piston so that the gauge spindle contacts a flat surface on the piston crown; zero the gauge.
h. Rotate the crankshaft counterclockwise until the gauge registers between 1.270 mm and 1.524 mm (0.050 in. and 0.060 in.).
i. Rotate the crankshaft clockwise until the dial gauge registers 1.016 mm (0.040 in.), then clearly mark a line on the vibration damper in line with the mark on the pointer.
j. Continue rotating the crankshaft until the gauge passes the zero mark and returns to 1.016 mm (0.040 in.). Again mark a line on the damper in line with the mark on the pointer.
k. Carefully measure the distance between the two marks on the damper then place a mark on the damper at the centre of the two outer marks.
l. Carefully bend the timing pointer until it coincides exactly with the centre mark on the damper, then repeat the procedure from step h. to ensure that the indicator is correctly aligned; remove the temporary marks from the damper.

28 General Assembly

a. Fit the oil pump and strainer to the engine; install the oil pump retaining bolts and torque them to 54 Nm (40 lb.ft).
b. Coat the sump gasket with multipurpose grease (XG 274), then attach the gasket to the sump rail on the engine; position the sump on the engine then install and hand tighten the retaining bolts.
c. Starting at the centre bolts on either side and working around the sump, torque the bolts to 41 Nm (30 lb.ft).

d. Fit the side covers to the engine block; fit the air starter then fit the oil filter adapter and oil cooler assembly to the engine.
e. Fit the generator mounting brackets to the engine, then fit the generator; remove the bolts and washers securing the cylinder liners in the block, then fit the cylinder heads to the engine (refer to EMEI VEH G 704 — Group 1).
f. Attach all cables, linkages and pipework to the engine then fit the accelerator slave cylinder.
g. Fit the fuel injection pump to the engine (refer to EMEI VEH G 704 — Group 4).
h. Fit the tachometer drive assembly then fit the oil filler tube and dipstick tube; fit the air compressor; attach the remaining components to complete the assembly of the engine; check that all external components on the engine are secure and that the drive belts are correctly tensioned.
i. Fill the engine with fresh OMD-115 oil, then bar the engine over a number of times in the normal direction of rotation; as soon as oil is seen to start flowing from the oil filter adapter, fit and tighten new filter cartridges onto the adapter.

29 Engine Break-in Procedure

a. Fit the engine in an appropriate dynamometer test bed; start and run the engine at 1000 rev/min under no load for approximately 20 minutes to allow for warm up and to check for leaks.
b. Place a full load on the engine for approximately 30 minutes at 1400 rev/min.
c. Run the engine at governed speed (2100 rev/min) for approximately 30 mins, then gradually bring the engine speed down to idle and allow it to run at idle for approximately 5 minutes before stopping the engine.
d. Before submitting the engine for storage, mask or blank-off all openings. If the oil has been subsequently drained from the engine, attach a NO OIL label to the engine.

## Table 3 — Engine Specifications and Torque Chart

| Component | Torque Limit†/Size or Fit | |
|---|---|---|
| | Nm | lb.ft |
| INTERCOOLER | | |
| Air Inlet and Water Outlet Manifold to Cylinder Head Bolts — Short | 62 *NP* | 46 *NP* |
| Long | 57 *NP* | 42 *NP* |
| Header Centre Stud Nut | 31 | 23 |
| Header to Inlet Manifold | 31 | 23 |
| Housing Support Bracket Bolt | 54 | 40 |
| Turbine Fan to Air Inlet Manifold V-Band Clamp Screw | 14 | 10 |
| INJECTION PUMP DRIVE | | |
| Injection Pump Driven Gear Hub Nut | 217 *NP* | 160 *NP* |
| Injection Pump Drive Coupling Nut (Tang Drive) | 140 | 110 |
| Injection Pump Drive Coupling Nut (Celeron Coupling Drive) | 176 | 130 |
| Injection Pump Driven Gear Hub | 54 *P* | 40 *P* |
| Injection Pump Drive Housing to Engine Block | 47 | 35 |
| Injection Pump to Adapter Screw | 54 *P* | 40 *P* |
| OIL PUMP | | |
| Driving Shaft Locknut | 47 *NP* | 35 *NP* |
| Cover Bolt | 10 *NP* | 7 *NP* |
| Housing to Engine Block Bolt | 54 *NP* | 40 *NP* |
| Inlet Tube Bolts | 35 *NP* | 26 *NP* |
| Driving Gear Nut | 149 | 110 |
| Pressure Relief Valve Cap | 81 | 60 |
| RELIEF VALVE HOUSING | | |
| Mounting Bolts | 75 | 55 |
| Valve Cap | 136 | 100 |
| ROCKER ARM | | |
| Shaft Position Screw | 31 | 23 |
| Bracket | 47 | 35 |
| Cylinder Head Cover Bolts | 22 | 16 |
| Adjusting Screw Nut | 35 | 26 |
| Engine Brake Solenoid to Rocker Arm Shaft | 33 | 24 |
| TIMING GEAR | | |
| Cover to Gearcase Bolts | 39 *NP* | 29 *NP* |
| TURBOCHARGER | | |
| Inlet and Oil Drain Tube Bolts | 31 | 23 |
| Turbine Housing to Exhaust Manifold Flange Bolt Nut or Stud Nut | 47 | 35 |
| Turbine Housing V-Band Coupling | 12.4 – 14.7 N | 10 – 130 lb.in. |
| MISCELLANEOUS TORQUE LIMITS | | |
| Air Compressor to Auxiliary Housing | 95 *NP* | 70 *NP* |
| Piston Cooling Spray Nozzle (Banjo Bolts) | 20 – 27 | 15 – 20 |
| Air Compressor Coupling Nut | 81 | 60 |
| Engine Brake Solenoid Adapter to Rocker Arm Mounting | 33 | 24 |
| Engine Brake Hydraulic Lash Adjustment Retaining Nut | 37 | 27 |
| Engine Brake Solenoid to Adapter | 11 | 8 |
| AUXILIARY DRIVE | | |
| Shaft Gear Retaining Bolt | 57 | 42 |
| Shaft and Camshaft Thrust Locknut | 146 *NP* | 108 *NP* |
| CAMSHAFT | | |
| Gear Retaining Bolts | 54 *P* | 40 *P* |

**Table 3 — *cont.***

| Component | Torque Limit†/Size or Fit | |
|---|---|---|
| | **Nm** | **lb.ft** |
| CONNECTING ROD | | |
| Bearing Cap Retaining Bolts | 203 | 150 |
| CRANKSHAFT | | |
| Rear Oil Seal Housing Bolts | 18 | 13 |
| Vibration Damper-to-Crank Bolt | 407 | 300 |
| Vibration Damper-to-Hub Bolt | 61 *P* | 45 *P* |
| CYLINDER BLOCK | | |
| Main Bearing Cap Retaining Bolt | 271 | 200 |
| Sump Drain Plug | 75 | 55 |
| Sump Mounting Bolts | 41 *NP* | 30 *NP* |
| Engine Side Cover Bolts | 31 *NP* | 23 *NP* |
| Engine Mounting Bolts (Rear) | 136 – 163 | 100 – 120 |
| Water Pump to Engine Block Bolts | 75 | 55 |
| | **mm** | **in.** |
| Liner Bore Out-of-Round or Taper on Diameter | 0.101 max.* | 0.004 max.* |
| Liner, Flange Clearance Around O.D. | 0.152 – 0.030 | 0.0006 – 0.0012 |
| Liner, Flange Extension Above Deck-Beaded with Fire Ring | 0.088 – 0.190 | 0.0035 – 0.0075 |
| Liner O.D. | 129.40 – 129.42 | 5.0945 – 5.0955 |
| Liner Bead for Fire Ring | 0.170 – 0.254 | 0.0067 – 0.010 |
| Liner Shoulder Height from Deck to Bottom of Bead | 0.076 – 0.203 | 0.003 – 0.008 |
| Liner Fit in Bore | Loose – Tight | |
| | 0.025 | 0.0010 |
| Liner I.D. Installed STD (minimum) | 123.83 | 4.8755 |
| (maximum) | 123.87 | 4.877 |
| Main Bearing Bore in Block | 107.97 – 108.80 | 4.251 – 4.252 |
| Main Bearing to Crankshaft Journal Clearance | 0.050 – 0.127 | 0.002 – 0.005 |
| Main Bearing I.D. in Place | 101.65 – 101.67 | 4.002 – 4.003 |
| Valve Lifter Bore | 17.43 – 17.46 | 0.6865 – 0.6875 |
| Valve Lifter Shank Diameter | 17.41 – 17.42 | 0.6855 – 0.6860 |
| Valve Lifter O.D. | 35.05 – 35.17 | 1.380 – 1.385 |
| Valve Lifter-to-Bore Clearance | 0.127 – 0.050 | 0.0050 – 0.0020 |
| CYLINDER HEAD | | |
| Cylinder Head Bolts | ‡ | ‡ |
| Exhaust Manifold Stud Nut | 47 | 35 |
| Injection Nozzle Holder Stud | 7 – 14 | 5 – 10 |
| Injection Nozzle Holder Stud Nut | 23.05 | 17 |
| Inlet Manifold Bolts (Patch Lock) | 47 – 49 | 35 – 46 |
| Water Outlet Manifold Bolts | 31 | 23 |
| FLYWHEEL | | |
| Housing Cover to Housing | 39 *NP* | 29 *NP* |
| Flywheel to Crankshaft Bolts | 258 *NP* | 190 *NP* |
| Housing to Engine Block Bolts — Upper | 230 | 170 |
| — Lower | 230 *P* | 170 *P* |
| Clutch Cover Bolts — CL79 | 61 | 45 |
| | **Nm** | **lb.in** |
| HOSE CLAMPS | | |
| Air Inlet Systems | | |
| ** Pressurized Hoses | 3.9 – 4.5 | 35 – 40 |
| *** Non-Pressurized Hoses | 2.1 – 2.3 | 19 – 21 |
| Coolant Systems | 2.8 – 3.3 | 25 – 30 |
| Oil Return Systems | 2.8 – 3.3 | 25 – 30 |
| T-Bolt Type Hose Clamps | 5.6 – 6.7 | 50 – 60 |

**Table 3 — *cont.***

| Component | Torque Limit†/Size or Fit | |
|---|---|---|
| | **Nm** | **lb.in** |
| TIP-TURBINE FAN | | |
| Pan Head Screw | 11.2 – 13.5 | 100 – 120 |
| Hex Head Bolts | 15.8 – 18.0 | 140 – 160 |
| V-Band Clamp Nut | 12.4 – 14.6 | 110 – 130 |
| Inlet Housing Mounting Bolt | 10.2 – 12.4 | 90 – 110 |
| | **Nm** | **lb.ft** |
| WATER MANIFOLD | | |
| Water Passage Cover to Cylinder | 75 | 55 |
| Water Outlet Fitting to Water Manifold | 18 | 13 |
| OIL COOLER | | |
| Fitting to Relief Valve Housing Screw | 31 | 23 |
| Front Fitting to Water Pump Screw | 47 | 35 |
| Front and Rear Fitting to Oil Cooler Screw | 18 | 13 |
| | **mm** | **in.** |
| TIMING GEAR | | |
| Backlash, Injection Pump Drive Gear to Injection Pump Driven Gear | 0.063 – 0.241 | 0.0025 – 0.0095 |
| All Other Gears | 0.033 – 0.274 | 0.0013 – 0.0108 |
| TIP TURBINE FAN | | |
| Fan Portion: | | |
| Number of Blades | | 10 |
| O.D. of Blades | 116.84 | 4.6 |
| Overall Wheel O.D. | 155.57 | 6.125 |
| Turbine Wheel: | | |
| Number of Blades | | 66 |
| VALVE | | |
| Deck to Valve Face — Inlet & Exhaust | 0.355 | 0.014 |
| Stem-to-Guide — Inlet | 0.050 – 0.101 | 0.002 – 0.004 |
| — Exhaust | 0.076 – 0.127 | 0.003 – 0.005 |
| Stem-to-Rocker Arm Lash Setting (COLD STATIC) | | |
| Inlet | 0.406 | 0.016 |
| Exhaust | 0.609 | 0.024 |
| Face Runout, Inlet & Exhaust | 0.038 | 0.0015 |
| Seat Angle, Inlet & Exhaust | 30° +0' −30' | |
| Seat Width — Inlet & Exhaust | 7.518 – 7.645 | 0.296 – 0.0301 |
| Stem O.D. — Inlet | 12.61 – 12.63 | 0.4965 – 0.4975 |
| — Exhaust | 12.58 – 12.61 | 0.4955 – 0.4965 |
| VALVE SPRINGS | | |
| Inner: | | |
| Free Length | 76.99 | 3.031 |
| | **kg** | **lb** |
| Spring Pressure When Compressed to 51.59 mm (2.0312 in.) | 43.54 – 48.08 | 96.0 – 106.0 |
| Service Limit | 40.91 | 90.2 |
| | **mm** | **in.** |
| Outer: | | |
| Free Length | 90.09 | 3.5468 |
| | **kg** | **lb** |
| Spring Pressure When Compressed to 54.76 mm (2.1562 in.) | 58.19 – 64.32 | 128.3 – 141.8 |
| Service Limit | 54.97 | 121.2 |

**Table 3 — *cont.***

| Component | Torque Limit†/Size or Fit | |
|---|---|---|
| | **mm** | **in.** |
| FLYWHEEL AND HOUSING | | |
| Runout of Housing Seal Mounting Bore to Crankshaft | 0.177 | 0.007 T.I.R. |
| Housing Runout, Radial and Axial | 0.203 | 0.008 T.I.R. |
| Housing to Dowel Pin Hole in Cylinder Block | 15.77 – 15.79 | 0.621 – 0.622 |
| Housing Dowel Pin Hole | 15.88 – 15.91 | 0.6255 – 0.6265 |
| INJECTION PUMP DRIVE | | |
| Injection Pump Driveshaft to Aluminium Housing — (No Bushings) | 0.038 – 0.076 | 0.0015 – 0.0030 |
| Injection Pump Driveshaft (Aluminium Housing) — End Float | 0.127 – 0.228 | 0.0050 – 0.0090 |
| Injection Pump to Nozzle High Pressure Tube I.D. | 1.70 | 0.067 |
| OIL PUMP | | |
| Gear-to-Cover End Clearance | 0.063 – 0.127 | 0.0025 – 0.005 |
| Gear-to-Cavity Side Clearance | 0.088 – 0.152 | 0.0035 – 0.006 |
| Gear Backlash in Pump | 0.596 – 0.749 | 0.0235 – 0.0295 |
| Oil Pump Drive Gear to Oil Pump Driven Gear Backlash | 0.182 – 0.350 | 0.0072 – 0.0138 |
| Spring-Free Length | 88.10 | 3.4688 |
| | **kg** | **lb** |
| Spring Pressure When Compressed to 78.18 mm (3.0781 in.) | 18.14 | 40 |
| | **kPa** | **psi** |
| Relief Valve Opening Pressure | 586.05 – 965.26 | 85 – 140 |
| OIL PRESSURE RELIEF VALVE | | |
| | **mm** | **in.** |
| Pressure Relief Spring (Piston Cooled): | | |
| Free Length | 98.62 | 3.883 |
| | **kg** | **lb** |
| Spring Pressure When Compressed to 74.93 mm (2.950 in.) | 15.01 ± 0.77 | 33.1 ± 1.7 |
| | **mm** | **in.** |
| Anti-Lag Valve Spring (Turbocharged Engines) | | |
| Free Length | 49.78 | 1.960 |
| | **kg** | **lb** |
| Spring Pressure When Compressed to 19.05 mm (0.750 in.) | 0.5 ± 0.05 | 1.3 ± .13 |
| PISTON | | |
| | **mm** | **in.** |
| Top, Extension Above Cylinder Block Deck at T.D.C. | 0.508 | 0.020 |
| Pin Bore Hole I.D. | 50.782 – 50.787 | 1.9993 – 1.9995 |
| Pin Length | 105.91 – 106.04 | 4.170 – 4.175 |
| Pin-to-Bushing Clearance | 0.030 – 0.040 | 0.0012 – 0.0016 |
| Pin O.D. | 50.76 – 50.77 | 1.9988 – 1.9989 |
| 240 GC 2238 | 0.127 – 0.203 | 0.005 – 0.008 |
| PISTON RINGS | | |
| Piston Ring End Gap | 0.330 – 0.635 | 0.013 – 0.025 |
| **Note:** Piston rings are supplied in single piston sets under Part No. 353 GC 269 DPI | | |
| Ring Groove Service Limit Measured over 3.048 mm (0.120 in.) Pins 123.8 mm (4.875 in.) Bore Dia. | | |
| Top Groove | 124.76 (min.) | 4.912 (min.) |
| Second Groove | 124.86 (min.) | 4.916 (min.) |
| Third Groove | 124.91 (min.) | 4.918 (min.) |

**Table 3 — *cont.***

| Component | Torque Limit†/Size or Fit | |
|---|---|---|
| | mm | in. |
| ROCKER ARM | | |
| Ratio | | 1.8:1 |
| Hole I.D. | 28.69 – 28.70 | 1.1296 – 1.1301 |
| Hole-to-Shaft Clearance | 0.012 – 0.038 | 0.0005 – 0.0015 |
| Shaft O.D. | 28.66 – 28.67 | 1.1286 – 1.1291 |
| Push Rod-Overall Length: | | |
| With Dynatard Engine Brake | 397.15 – 397.91 | 15.636 – 15.666 |
| CYLINDER HEAD | | |
| Alignment Across Exhaust Faces | 0.127 | 0.005 |
| Deck Flatness Under 18 Inch Straight Edge | 0.038 | 0.0015 |
| Injection Nozzle Sleeve-to-Bore (Press Fit) | 0.038 – 0.101 | 0.0015 – 0.0040 |
| Bore in Block for Injection Nozzle Holder Insert — (Large End A Small End B) | A 27.68 – 27.73 | 1.090 – 1.092 |
| | B 25.34 – 25.40 | 0.998 – 1.000 |
| Injection Nozzle Holder Insert Diameter — (Large End A Small End B) | A 27.77 – 27.78 | 1.0935 – 1.0940 |
| | B 25.43 – 25.45 | 1.0045 – 1.0020 |
| Fire Ring Groove | Wide — Deep | |
| | 0.838 × 0.203 | 0.033 × 0.008 |
| Valve Guide O.D. | 17.47 – 17.49 | 0.6881 – 0.6886 |
| Valve Guide, Ream I.D. After Installation Intake and Exhaust | 12.68 – 12.71 | 0.4995 – 0.5005 |
| Valve Guide Bore in Head | 17.42 – 17.44 | 0.6860 – 0.6870 |
| Valve Guide-to-Bore Press Fit | 0.027 – 0.066 | 0.0011 – 0.0026 |
| Valve Guide Extension Above Valve Spring Seat Surface | 39.29 | 1.5468 |
| Valve Seat Width | 1.58 – 2.38 | 0.0625 – 0.0937 |
| Valve Seat Insert Face Angle | 30° | −0′+30 |
| Valve Seat Insert Runout | 0.050 | 0.020 |
| Valve Seat Insert Bore — Inlet | 61.89 – 61.92 | 2.437 – 2.438 |
| Exhaust | 52.88 – 52.90 | 2.082 – 2.083 |
| Valve Seat Insert O.D. — Inlet | 61.98 – 62.01 | 2.4405 – 2.4415 |
| Exhaust | 52.94 – 52.97 | 2.0845 – 2.0855 |
| Valve Seat Insert Press Fit in Head — Inlet | 0.063 – 0.114 | 0.0025 – 0.0045 |
| Exhaust | 0.088 – 0.139 | 0.0035 – 0.0035 |
| Valve Seat Counterbore Depth | 11.20 – 11.30 | 0.441 – 0.445 |
| AUXILIARY SHAFT | | |
| Shaft Bearing, Presized I.D. — Front | 52.41 – 52.49 | 2.0636 – 2.0666 |
| in place — Rear | 50.81 – 50.88 | 2.0004 – 2.0034 |
| Shaft Bearing, Presized O.D. — Front | 58.77 – 58.80 | 2.314 – 2.315 |
| — Rear | 57.20 – 57.22 | 2.252 – 2.253 |
| Shaft Bearing, Bore in Block — Front | 58.69 – 58.72 | 2.311 – 2.312 |
| — Rear | 57.12 – 57.15 | 2.249 – 2.250 |
| Shaft Bearing, Press Fit in Bore — Front | 0.050 – 0.101 | 0.002 – 0.004 |
| — Rear | 0.050 – 0.101 | 0.020 – 0.004 |
| Shaft End Play | 0.203 – 0.355 | 0.008 – 0.014 |
| Shaft Journal-to-Bearing — Front | 0.041 – 0.142 | 0.0016 – 0.0056 |
| — Rear | 0.035 – 0.137 | 0.0014 – 0.0054 |
| Shaft Journal Diameter O.D. — Front | 52.3542 – 52.37 | 2.061 – 2.062 |
| — Rear | 50.74 – 50.77 | 1.998 – 1.999 |

**Table 3 — *cont.***

| Component | Torque Limit†/Size or Fit | |
|---|---|---|
| | mm | in. |
| CAMSHAFT — Face Width | 22.22 | 0.875 |
| Bearing Presized I.D. — #1 through 6 | 62.03 – 62.05 | 2.442 – 62.05 |
| Installed — #7 | 52.73 – 57.25 | 2.2535 – 2.5450 |
| Bearing Free O.D. — #1 through 6 | 66.71 – 66.76 | 2.6265 – 2.6285 |
| — #7 | 66.70 – 66.72 | 2.6260 – 2.6270 |
| Bearing Bore in Block — #1 through 7 | 66.62 – 66.64 | 2.6230 – 2.624 |
| Bearing Press Fit in Bore — #1 through 6 | 0.063 – 0.139 | 0.0025 – 0.0055 |
| — #7 | 0.050 – 0.101 | 0.002 – 0.004 |
| End Play | 0.203 – 0.355 | 0.008 – 0.014 |
| Journal Diameter — #1 through 6 | 61.95 – 61.98 | 2.4390 – 2.4400 |
| — #7 | 57.17 – 57.20 | 2.2510 – 2.2520 |
| Journal-to-Bearing Clearance — #1 through 6 | 0.050 – 0.101 | 0.002 – 0.004 |
| — #7 | 0.038 – 0.076 | 0.0015 – 0.0030 |
| CONNECTING ROD | | |
| Length Between Centers | 271.42 – 271.50 | 10.686 – 10.689 |
| Cap Angle | 35 degrees | |
| Bore for Small-end Bush | 53.96 – 53.98 | 2.1245 – 2.1255 |
| Burnish Small-end Bush to | 50.48 – 50.50 | 1.9875 – 1.9885 |
| Finish Bore to | 50.81 – 50.81 | 2.0000 – 2.0004 |
| Rod Bore for Bearing | 80.85 – 80.77 | 3.1795 – 3.1803 |
| Bearing I.D. in Place | 76.18 – 76.21 | 2.9996 – 3.0006 |
| Bearing to Crankpin Running Clearance | 0.027 – 0.099 | 0.0011 – 0.0039 |
| Side Play | 0.177 – ~~0.304~~ | 0.007 – 0.012 |
| Twist (max. between centres) | 0.226 | 0.0089 |
| Bend (max. between centres) | 0.090 | 0.0036 |
| CRANKSHAFT | | |
| Crankpin Journal O.D. | 76.12 – 76.14 | 2.9970 – 2.9980 |
| End Play at #4 Main | 0.101 – 0.279 | 0.004 – 0.011 |
| Main Journal O.D. | 101.55 – 101.57 | 3.9980 – 3.9990 |
| Journal Out-of-Round or Taper | 0.0088 (max.) | 0.00035 (max.) |
| Runout at #4 Journal Shaft Supported on #1 and #7 | 0.127 (max.) | 0.005 (max.) |
| CYLINDER BLOCK | | |
| Cylinder Bore in Block | 129.40 – 129.42 | 5.0945 – 5.0955 |
| Deck Flatness | 0.05 | 0.002 |

* For Service Block only. The maximum for a rebored block is 0.025 mm (0.001 in.).

** Includes all clamps installed between turbocharger outlet and inlet manifold or inter-cooler header, inlet manifold connecting hose (if used) and tip turbine fan bleed air hose.

*** Includes all hoses between air cleaner and turbocharger inlet or inlet manifold.

† Threads, washers, under head of bolts and washer face of nuts to be lubricated with OMD-115 motor oil. Tolerances for torque specifications (unless otherwise specified) ±5% of torque listed. A calibrated manual torque wrench or a torque controlled air motor will be required.

‡ Oil all cylinder head bolt bosses, bolt threads and washers with OMD-115 engine oil prior to assembly. Do not oil threads in engine block. Tighten bolts individually on any one head in the proper sequence in the following steps:

a. Torque all to 68 Nm (50 lb.ft).
b. Repeat in sequence to 169 Nm (125 lb.ft).
c. Finally tighten to 271 Nm (200 lb.ft).

After run-in procedure, in sequence, back off each bolt individually until free, then retorque same bolt to 298 Nm (220 lb.ft).

*NP* — Nylon Pellet Insert or Nylon Patch. *P* — Place Head Bolt.

# GROUP 4 — FUEL

## FUEL INJECTION PUMP OVERHAUL

30 Disassembly

NOTE: Unless otherwise stated, all numbers in parentheses ( ) refer to illustration numbers in Figure 90.

> *CAUTION:*
> *All work on injection equipment must be carried out in a clean location.*

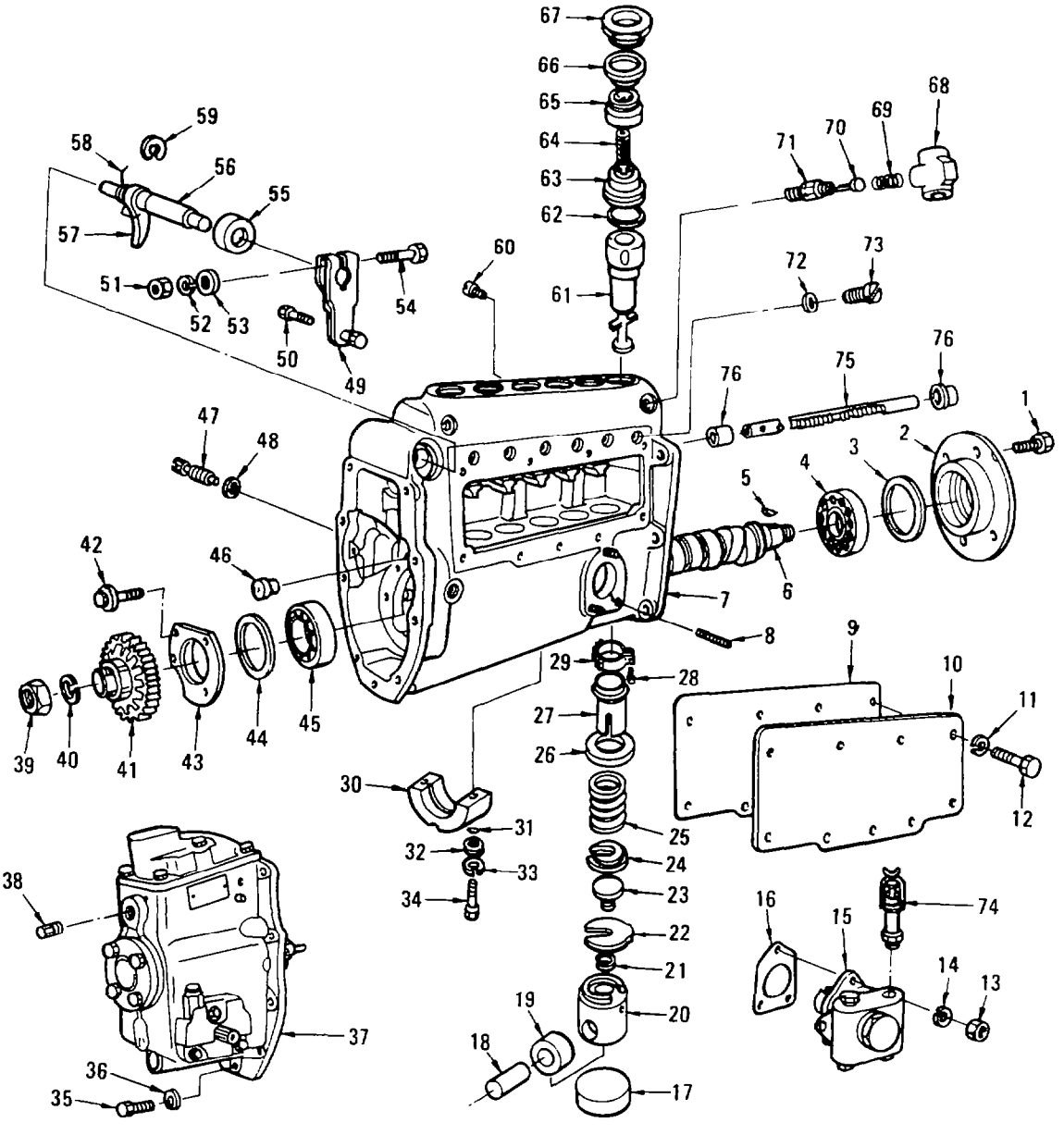


Fig. 90 — Exploded View of Injection Pump

a. Remove the injection pump as detailed in EMEI VEH G 704 — Group 4. Remove all dirt and grease from the exterior of the pump, then drain out all lubricating and fuel oil.

b. Secure the pump in an upright position by clamping the housing in a soft jawed vice (see fig. 91).

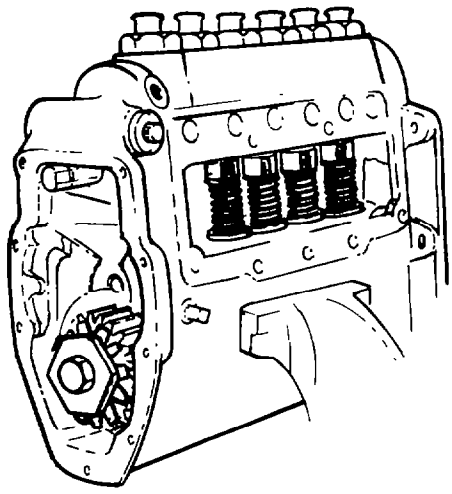

Fig. 91 — Pump Mounted in Vice

c. Remove the nuts (fig. 90, item 13), lockwasher (item 14) and remove the supply pump and gasket (items 15 and 16).
d. Remove the bolts and lockwashers (items 12 and 11) and remove the inspection cover and gasket (items 10 and 9).
e. Remove the overflow valve (items 68 to 71) as an assembly, using an open end spanner.
f. Remove the governor fastening bolts and lock washers (items 35 and 36). Tap the governor housing (item 37) lightly with a plastic or rubber mallet to loosen, then move the governor (item 37) to the right to disengage the control rack (item 75). Remove the governor assembly.
g. Remove the injection pump to engine adapter.
h. Hold the camshaft stationary using tool TSE 7913D attached to the front drive coupling. Loosen the nut (item 39) with a socket, then attach puller TSE 7920 to the friction clutch assembly (item 41) and tighten the bolt 1½ turns (see fig. 92). Tap the end bolt with a hammer to upset the friction clutch assembly (item 41). Remove the tool, nut (item 39), lockwasher (item 40) and friction clutch assembly (item 41).

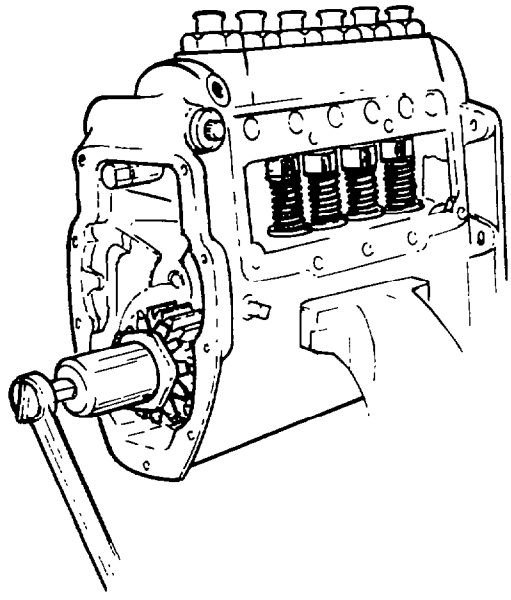

Fig. 92 — Removing Friction Clutch Assembly

i. Lift the tappet with tool TSE 761, and insert service pin TSE 76156B into the hole in the tappet shell (fig. 90 item 20) (see also fig. 93).

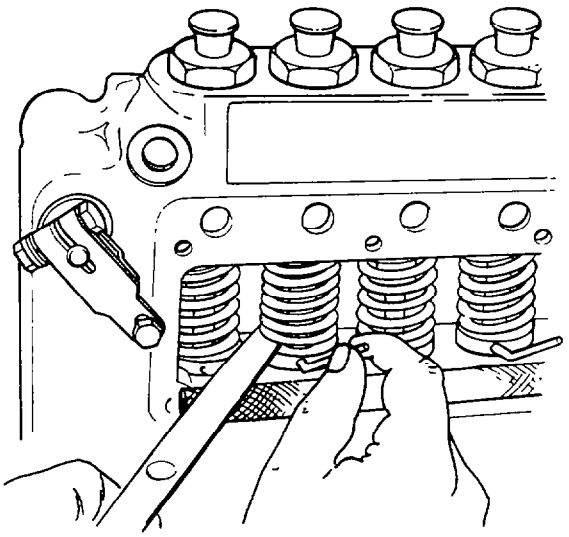

Fig. 93 — Installing Service Pins

NOTE: Instances may occur when the camshaft (item 6) must be slightly rotated with tool TSE 7913D and/or the delivery valve securing nut (item 67) must be loosened to facilitate raising the tappet sufficiently to allow engagement of the service pin.

> *CAUTION:*
> *Make certain that the service pins TSE 76156B are fully inserted.*

j. Remove the front drive coupling and woodruff key (item 5 fig. 90).
k. Invert the pump housing. Secure by gripping the delivery valve securing nut (item 67) in a soft jawed vice.
l. Remove the centre bearing retaining bolts (item 34), washers (items 32 and 33) and O-rings (item 31).
m. Remove the rear bearing plate screw (item 42) using a 3/8 in. socket and remove the rear bearing plate (item 43), spacers (item 44) and roller bearing (item 45) by tapping the camshaft (item 6) lightly with a plastic or fibre mallet to move the rear bearing plate outward.
n. Carefully slide the camshaft (item 6) and centre bearing (item 30) out the rear of the housing (see fig. 94).

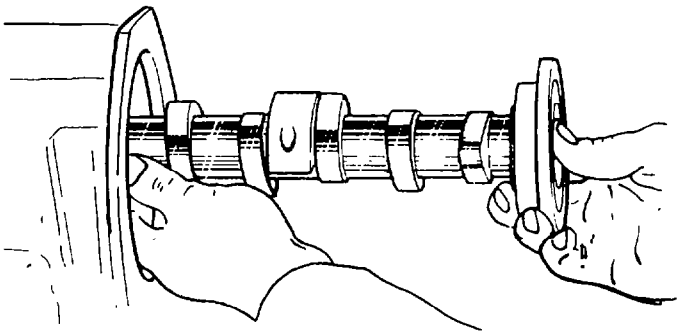

Fig. 94 — Removing Camshaft

o. Remove the fastening screws (fig. 90, item 1), front bearing plate (item 2) and spacers (item 3) (roller bearing outer raceway). If necessary use a brass drift or wood dowel inserted in the back of the pump housing (item 7) to tap out the front bearing plate.

NOTE: The front bearing plate (item 2) need not be removed unless visual inspection indicates a need for part replacements.

p. Fit a socket (approximately 33 mm 1 5/16 in. O.D.) into the hollow of the base closure plug (item 17) and drive the plugs into the pump cavity (see fig. 95).

NOTE: Use mechanical fingers to remove the plugs from the pump cavity.

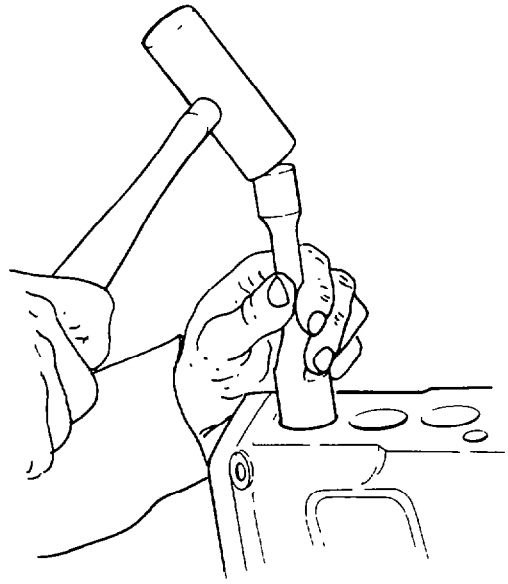

Fig. 95 — Driving Out Base Closure Plugs



q. Remove the service pin by relieving the plunger spring (item 25) tension as follows:

1 Compress the spring using tool TSE 76160D (see fig. 96).

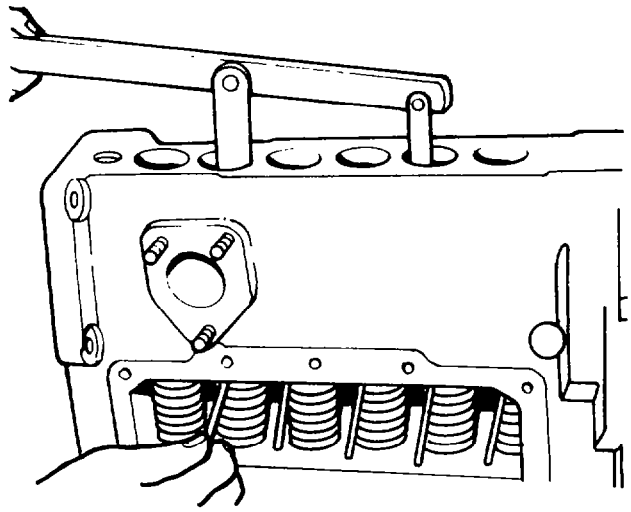

Fig. 96 — Compressing Tappet Spring

2 Remove the service pin TSE 76156B, then slowly release pressure on the spring (item 25) until the tappet assembly (items 18 to 23) comes to rest with no tension on the tappet spring. Withdraw the tool and repeat the procedure at each tappet spring.

r. Remove the tappet locating screws (fig. 90, item 47) and gaskets (item 48).

NOTE: The screws are staked and to loosen, may require a sharp rap using an impact tool.

> *WARNING*
> *Never place hands (fingers) inside the camshaft compartment when the plunger springs are compressed*

NOTE: The parts (components) removed from a pump cylinder MUST be kept together and identified to ensure reassembly to that cylinder. This practice is maintained in order to take advantage of wear patterns and to eliminate any unnecessary readjustment.

s. Remove the tappet assemblies (items 18 to 23) with service tool TSE 7697 (see fig. 97).

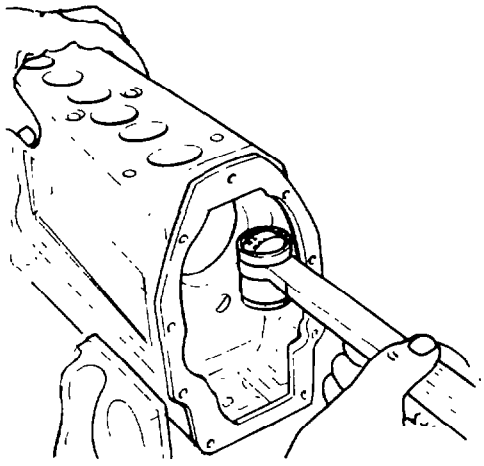

Fig. 97 — Removing Tappet

t. Remove the lower spring seats (item 24) and plungers (component of item 61) with mechanical fingers, TSE 7661 as shown in fig. 98.

NOTE: 1. Manually lift the plunger spring (item 25) in order to grasp the plunger with mechanical fingers.
2. Avoid damaging the plungers during removal and keep in proper sequence to mate with their respective barrel.

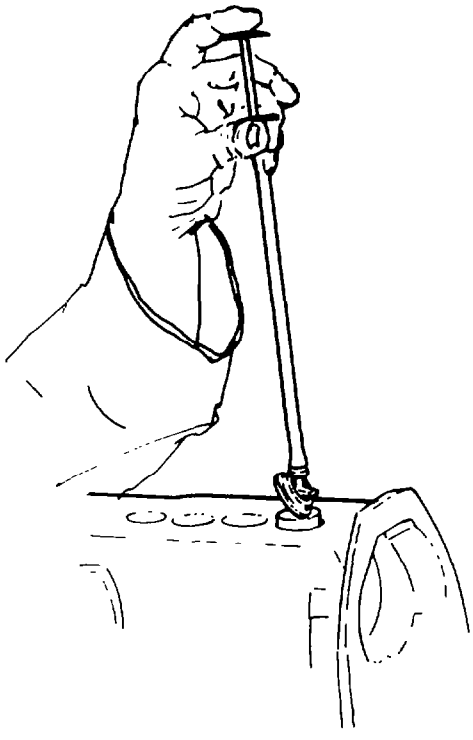

Fig. 98 — Removing Plunger

u. Remove the plunger spring (item 25), upper spring seats (item 26) and control sleeve assemblies (items 27 to 29).
v. Re-position the pump upright in a vice.
w. Remove the delivery valve securing nuts (item 67), sealing gaskets (item 66), holders (item 65) and springs (item 64).

x. Use a magnetic pencil or wooden dowel to remove the delivery valve stems (part of item 63), and using puller TSE 76242, remove the delivery valve body as shown in fig. 99.

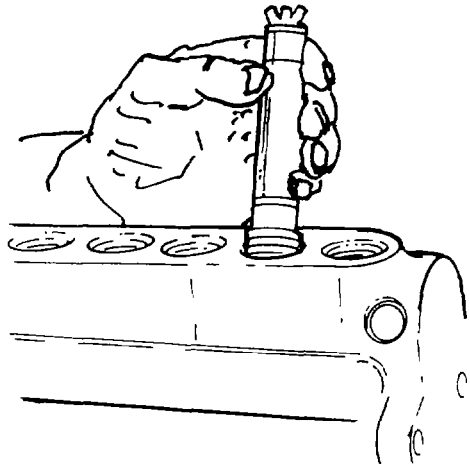

Fig. 99 — Removing Delivery Valve Body

NOTE: Extreme side shifting of the tool will cause breakage of the nylon body top. Flats have been machined in the tool body to accept an open end spanner and a slight tap to the spanner will permit extraction when difficulty is experienced during normal disassembly.

y. Remove the barrel locating screws (item 73) and copper gaskets (item 72).
z. Remove the barrels (item 61) and assemble to the mating plungers immediately.
aa. Remove the control rack locating screw (item 60), then slide the control rack (item 75) out.
ab. If the control rack bushings (item 76) are worn, scored or damaged, remove the bushing(s) with service tool TSE 76150.
ac. Remove the shutoff lever assembly (items 49 to 54) from the shaft (item 56) only if necessary.
ad. Remove the pump from the vice and set on bench with the governor end up.
ae. Remove the shutoff shaft components (items 56 to 59) only if necessary per the following procedure.
    1. Use a screwdriver to pry out retaining ring (item 59).
    2. Slide the shutoff shaft (item 56) out of the housing, thereby disengaging the stop lever (item 57) and spring (item 58).
    3. Remove the parts from the pump cavity.
    4. Pry out the oil seal (item 55) if replacement is necessary.
af. If required, remove the inner portions of the roller bearing assemblies (items 4 and 45) from the camshaft (item 6) by pressing out on an arbor press.

NOTE: Use a plate which will fit around the camshaft and contact the roller bearing on the inner race.

ag. When necessary, remove the roller bearing outer race from the end plates (items 2 and 43) using tool TSE 7621 and spring collet TSE 7621-6.
ah. Retain the end play adjusting shims (items 3 and 44) with companion end plates (items 2 and 43).
ai. Remove the pins (item 18) and roller assemblies (item 19) from tappets (item 20).
aj. Remove the tappet knobs (item 23) and spacers (item 22) from tappets (item 20).
ak. If required, remove the snap rings (item 21) from the tappet knobs (item 23).

31 Cleaning

a. Wash all parts in a cleaning agent (Varso or equivalent).

> *CAUTION:*
> *1. Use care to avoid nicking or damaging parts during washing, especially such items as the camshaft, plunger and barrel assemblies and delivery valve assemblies.*
>
> *2. Always keep mated assemblies together to avoid the possibility of mixing. (Plungers and barrels should always be united as soon as possible.)*

b. Remove all traces of gasket material from gasket surfaces of covers and housings.
c. Flush and thoroughly clean the fuel sump and pump housing oil duct.

32 Inspection. Table 4 details inspection procedures for the fuel injection pump together with expected conditions/results and corrective action as necessary. Unless otherwise specified, numbers in parentheses ( ) refer to illustration numbers in fig. 90.

**Table 4. Fuel Injection Pump Inspection Procedures**

| Part | Inspect for the Following Condition(s) | Corrective Action |
|---|---|---|
| MISCELLANEOUS HARDWARE | | |
| 1. Gaskets, O-rings and copper gaskets. | Not re-usable. | Replace. |
| 2. Screws, nuts, shims and flat washers. | Damage. | Replace. |
| 3. Lockwashers. | Damage (replacement at overhaul is recommended). | Replace. |
| 4. Inspection cover (item 10) and control rack cap (item 74) | Damage. | Replace. |
| CAMSHAFT AND RETAINING COMPONENTS | | |
| 1. End plates (items 2 and 43) | Damage. Fretting with housing. Evidence of bearing raceway rotation. | Replace. |
| 2. Roller bearings (item 4 and 45) | Wear or damage. Scoring or scuffing. Roller bearings are to turn smoothly and freely; there must be no "grinding", sticking or eccentric motion. Bearing must be a press fit on camshaft. | Replace. |
| 3. Centre bearing (item 30) | Scored or worn I.D. Damaged retaining threads. | Replace. |
| 4. Camshaft (item 6) | Scored, galled or worn cam lobes or tapered ends. Damaged threads or keyway. | Replace. |
| | Damaged, scored/galled centre bearing journal. | Polish smooth. |
| PUMP HOUSING AND CONTROL RACKS | | |
| 1. Pump housing (item 7) | Dirty fuel sump. | Flush out sump. |
| | Clogged or dirty lubrication oil duct. | Remove plug (item 46) and flush out duct. |
| | Damaged gasket pads and seats (surfaces). | Refinish smooth and flat. |
| | Damaged threads. | Rethread with appropriate tap or replace housing. (May be repaired with "Heli-Coil" thread inserts.) |
| | Worn, scored or damaged tappet bores. | Replace. |
| | Fretted bearings plate surfaces. | |
| | Cracked or damaged beyond use. | |
| | Damaged barrel seat(s). | Re-seat barrel or replace housing. |

**Table 4 — *cont.***

| Part | Inspect for the Following Condition(s) | Corrective Action |
|---|---|---|
| 2. Control rack (item 75) | Damaged or scored O.D. Worn scored or damaged gear teeth. Bent or distorted. Connecting link hole worn or scored. | Replace. |
| 3. Control rack bushings (item 76) | Wear, scoring and grooving. Loose in housing bore. | Remove bushing(s). Install new bushing(s). Line ream bushing(s). |
| 4. Supply pump mounting studs (item 8) | Damage or looseness. | Replace. |
| 5. Shutoff shaft oil seal (item 55) | Damaged, looseness or oil leakage. | Replace. |
| 6. Base plugs (item 17) | Not re-usable. | Replace. |
| CONTROL SLEEVES AND TAPPETS | | |
| 1. Tappet pin (item 18) | Wear, scoring, ridging or grooving. | Replace. |
| 2. Roller (item 19) | Worn or scored bushing. Worn or scored O.D. | Replace. |
| 3. Tappet (item 20) | Cracks or damage. Worn or scored O.D. Loose pin fit. | Replace. |
| 4. Spacer (item 22) | Damage, wear or scoring. | Replace. |
| 5. Snap ring (item 21) | Damage. | Replace. |
| 6. Tappet knob (item 23) | Wear, scoring or damage. | Replace. |
| 7. Lower spring seat (item 24) | Wear from spring, plunger or tappet knob contact. Damaged or scoring. | Replace. |
| 8. Spring (item 25) | Broken or damaged. Worn ends. | Replace. |
| 9. Upper spring seat (item 26) | Damage, scoring, flatness and wear. | Replace. |
| 10. Control sleeve (item 27) | Damage. Worn plunger slots. | Replace. |
| 11. Segment gear (item 29) | Damage. Worn teeth. Loose when clamped to sleeve. Damaged thread. | Replace. |
| PLUNGER AND BARREL ASSEMBLY AND DELIVERY VALVE | | |
| 1. Plunger and barrel assembly (item 61) | Seized plunger. Worn plunger flats on helix. Scored (vertically ridged or grooved) plunger or barrel. Cracked barrel. | Replace. |
| | Nicks or burrs. | Stone smooth. |
| | Scratched sealing face. | Lap smooth and flat. |

**Table 4 — *cont.***

| Part | Inspect for the Following Condition(s) | Corrective Action |
|---|---|---|
| 2. Delivery valve assembly (item 63) | Cracked valve body. Seized valve. Badly scored seat. Worn or scored relief piston. | Replace. |
| | Sticky valve. | Lap valve to body and clean thoroughly. |
| | Scored or scratched sealing faces. | Lap smooth and flat. |
| | Leakage (see ①). | |
| 3. Spring | Damaged, broken or weakened coils (loss of tension). | Replace. |
| 4. Holder (item 65) (see ②) | Cracks or damage. | Replace. |
| | Scratched or scored sealing face. | Lap smooth and flat. |
| | Broken or seized snubber valve. | Replace holder. |
| 5. Nut (item 67) | Damage. | Replace. |
| | Corrosion. | Clean and polish. |
| SHUTOFF SHAFT AND RELATED COMPONENTS | | |
| 1. Snap ring (item 59) | Replacement is mandatory if part has been disassembled. | Replace. |
| 2. Stop lever (item 57) | Damaged bent or broken. Damaged splines. Wear. | Replace. |
| 3. Spring (item 58) | Broken, damaged or weak. | Replace. |
| 4. Shaft (item 56) | Damaged splines. Bent. Damaged snap ring grooves. | Replace. |
| 5. Shutoff lever (item 49) | Bent, Damaged splines. Damaged or worn Bowden wire connections. | Replace. |
| For overhaul procedure of the supply pump and hand primer refer to EMEI VEH G 704 — Group 4. | | |
| OVERFLOW | | |
| 1. Screw (item 68) | Damaged hex. Damaged threads or seating surface. Scored, worn, damaged or coined valve seat. Scored or worn valve bore. | Replace overflow valve assembly. |
| 2. Valve (item 69) | Scored or worn piston. Scored or worn flutes. Nicked, scored, worn or damaged valve seat. Spring contact area indentations in excess of 0.13 mm (0.005 in.). | Replace. |
| 3. Spring (item 70) | Broken, nicked or worn (flat spots). | Replace. |
| 4. Housing (item 71) | Cracks, damage, porosity. Damaged threads or screw seating surface. Spring contact area indentations in excess of 0.13 mm (0.005 in.). | Replace overflow valve assembly. |

NOTES

① Check the sealing action of the delivery valve assembly (item 63) as follows:

a. Assemble the delivery valve (item 63) and spring (item 64) to the test adapter TSE 76197-1.
b. Connect the test adapter to the nozzle test stand.
c. Apply a pressure of 17 500 kPa (2 500 psi) to the delivery valve.
d. Inspect for oil leakage at the delivery valve seat. (Very gradual pressure drop is acceptable.)
e. If no oil leakage is noted, the unit is acceptable.
f. If oil leakage is noted, lap the valve seat to the mating seat in the body and/or lap the faces of the body and retest.

> *CAUTION:*
> *Wash clean to remove compound prior to retest.*

g. Replace the delivery valve assembly if repeated lapping operations do not eliminate leakage.

② Holders (item 65) which incorporate integral snubber valves must always be checked to ensure that the discs are free in the holders.

---

33 Reassembly

NOTE: 1. Unless otherwise stated, all numbers in parentheses ( ) refer to illustration numbers in figure 90.
2. All parts, except those which are to be coated with sealant, adhesive or Loctite are to be dipped in clean, light, lubricating oil (Viscor 1487C calibration oil) prior to assembly.

a. If removed, assemble the snap rings (item 21) to the tappet knobs (item 23).
b. Assemble the timing spacers (item 22) and tappets (item 23 to the tappet shells (item 20).
c. Assemble the rollers (item 19) and pins (item 18) to the tappet shells (item 20).
d. If removed, install the roller bearing outer raceways in the end plates (items 2 and 43) as follows:
   1. Place the removed end play adjusting shims (items 3 and 44) in the companion end plates (items 2 and 43).
   2. Press the outer raceways into the end plates (items 4 and 45) until seated against the shims.
e. If removed, install the inner portions of roller bearings (items 4 and 45) on the camshaft (item 6) with service tool TSE 76114 and arbor press. Press the bearing until seated firmly against the camshaft shoulder.

> *CAUTION:*
> *1. The inner portions of the bearings must be heated (e.g. in hot oil bath) before installing on the camshaft, or splitting of the inner raceway is inevitable.*
> *2. Service tool TSE 76114 must not contact the bearing cage. If contact is noted chamfer O.D. of the tool to prevent damage to the bearing cage.*

f. If the lubrication duct plug (item 46) was removed, apply "Loctite 242" to the threads of the housing (item 7) and screw the plug in until seated. Torque the plug to 8.5 – 9 Nm (75 – 80 lb.in.).
g. If the supply pump mounting studs (items 8) need replacement, re-tap the housing (.250 in. – 20 UNC – 2B thread) to a depth of 15.2 – 15.8 mm (0.60 – 0.625 in.), clean out, apply "Loctite 271" to the housing and stud thread, and install a new stud projecting 14.5 mm (0.571 in.) from housing.
h. When replacing the oil seal (item 55), clean out the bore, apply "Locquic T" primer and "Loctite 271" to O.D. of the seal, and press in until seated. The sealing lip must face inwards.

i. Install the shutoff shaft (item 56) into the seal (item 55), stop lever (item 57) and spring (item 58) and through to the bore opposite the seal as shown in fig. 100.

NOTE: The tang of the spring (item 58) must rest on the boss in the housing.

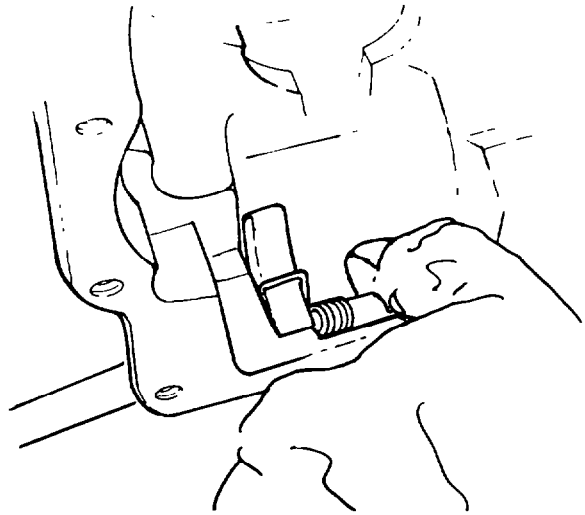

Fig. 100 — Assembling Shutoff Shaft

j. Assemble the lever assembly (items 49 to 54) onto the shaft (item 56).

NOTE: Rotate the shutoff lever in a clockwise direction and release. Spring tension must return the lever to the running position.

k. Install the retaining ring (item 59) into the groove in the shutoff shaft (item 56).

l. Install new control rack bushings (item 76) as follows:

1. Press the bushing with TSE 76145 into the housing until seated in the bore. (Slotted bushings must have the slot positioned toward the bottom of the pump.)
2. Secure the housing in a soft jawed vice.
3. Line ream the bushings with TSE 76247 reamer (see fig. 101).
4. Use clean compressed air to remove chips.

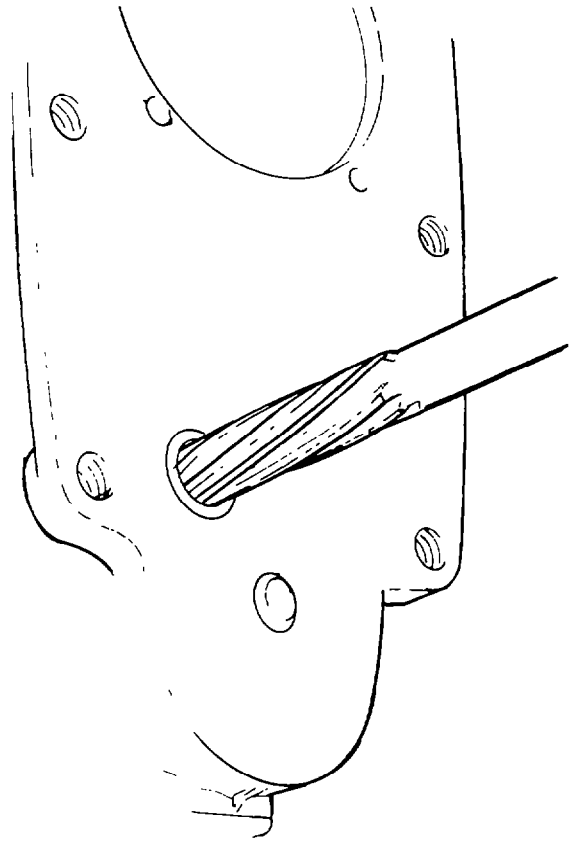

Fig. 101 — Reaming Bushings

m. Install the control rack (item 75) and align the slot in the rack with the locating hole in the housing, then install the locating screw (item 60) and torque to 10.0 – 11.0 Nm (90 – 100 lb.in.).
n. Ensure that the rack moves freely, then stake the locating screw (item 60) in two places.

NOTE: When reassembling parts removed from a pump cylinder, ensure that the mated parts are re-assembled to the original cylinder.

o. Insert the barrels (item 61) into the housing bores.
p. Rotate the barrels to align the locating slots with the locating holes in the housing.
q. Assemble barrel locating screws (item 73) with new copper gaskets (item 72) and torque to 10.0 – 11.0 Nm (90 – 100 lb.in.).

NOTE: Barrels must not be tight in the housing after installing the screws (item 73). Manually lift the barrels slightly (through the spring compartment window) to check for the required freeness.

r. Assemble the O-rings (item 62) to the delivery valve assemblies (item 63), then apply a film of grease to the O-ring.
s. Insert the delivery valve bodies (part of item 63) using service tool TSE 76242 as shown in fig. 102.

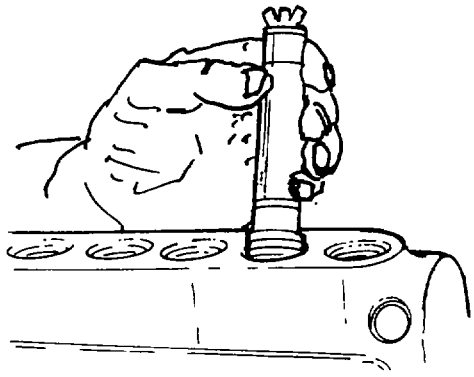

Fig. 102 — Installing Delivery Valve

t. Insert the delivery valve (part of item 63) to its respective valve body.
u. Assemble the greased sealing gaskets (item 66) with the bevelled side down, to the delivery valve retaining nuts (item 67).
v. Install the springs (item 64), holders (item 65) and nuts (item 67). Torque the nuts (item 67) to 80 – 90 Nm (60 – 65 lb.ft) for cadmium plated original finish or 115 – 120 Nm (85 – 90 lb.ft) for black oxide original finish.
w. Invert the pump housing in the vice.
x. Position the control rack (item 73) at the mid travel point and assemble the segment gears (item 29) and screws (item 28) to the control sleeves (item 27) as follows:
   1. Hold the control sleeve (item 27) upright and face the positioning holes.
   2. Assemble the segment gear (item 29) to the control sleeve (item 27), aligning the gap in the segment gear with the hole of the control sleeve flange which is closest to the cut-out in the sleeve as shown in fig. 103 and with the segment screw (item 28) positioned so as to have the head of the screw (item 28) towards the governor end of the pump.
   3. Tighten the screws firmly.

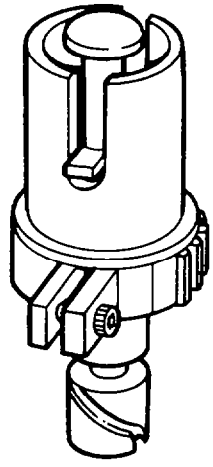

Fig. 103 — Assembling Segments

y. Assemble the control sleeve (item 27) over the barrel extension with the centre segment gear at 90° to the control rack axis. Segment gaps must face directly toward the inspection window and all must be parallel.

z. Position the upper spring seats (item 26) over the control sleeves (item 27) and insert the plunger spring (item 25).

aa. Assemble the lower spring seat (item 24) to the plunger, then grasp each plunger knob with mechanical fingers TSE 7661 so that the notch on the plunger flange will face the housing window.

ab. Insert each plunger and seat (item 24) into the mating barrel as shown in fig. 104 and make certain that the notched plunger flange is facing the inspection window.

NOTE: A slight radial motion of the plunger will aid in mating it to the barrel.

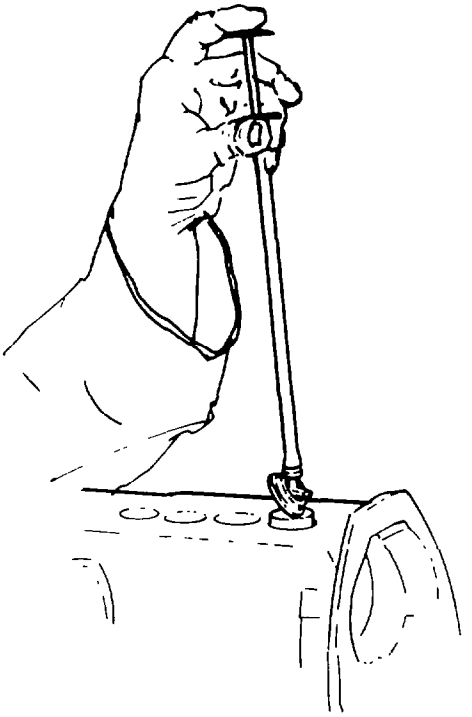

Fig. 104 — Installing Plunger

ac. Insert the tappet assemblies (items 18 to 23) with service tool TSE 7697 into their respective tappet bores as shown in fig. 105.

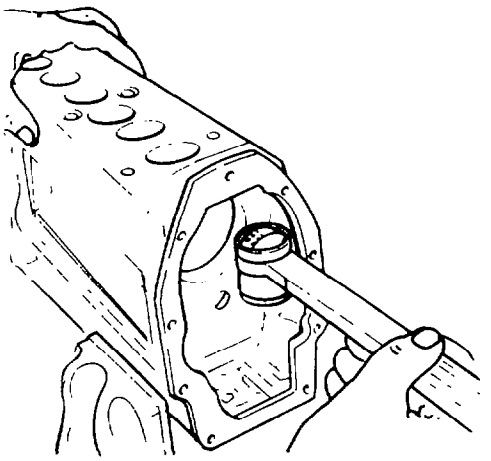

Fig. 105 — Installing Tappet

ad. Align the tappet locating slot with the locating screw hole and assemble the tappet locating screws (item 47) and new copper gaskets (item 48). Torque the screws to 16.0 – 18.0 Nm (145 – 155 lb.in.), then stake the housing (item against screws (item 47) in four places.

ae. Align the notched plunger flanges with the slots of the control sleeves (item 27).

af. Compress each plunger spring (item 25) as follows:

1. Assemble the compressing tool TSE 76160D onto the pump housing and align the ram of the tool with the tappet roller as shown in fig. 106.
2. Carefully compress the spring (item 25) and insert the service pin TSE 76156B, then slowly release the tappet assembly until the tappet comes to rest.

NOTE: When compressing the plunger spring (item 25), it may be necessary to move the control rack (item 75) slightly to permit plunger flange engagement with the sleeve slot.

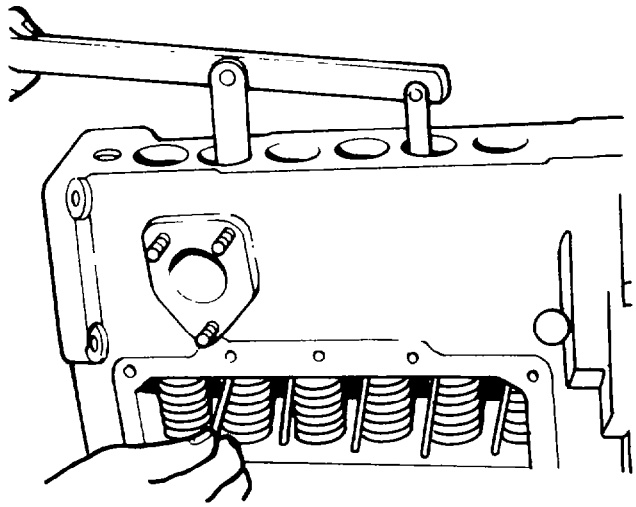

Fig. 106 — Compressing Plunger Spring

ag. Assemble the front bearing plate (item 2) with the shims (item 3) and the bearing outer race (part of item 4) to the housing (item 7). Torque the screws (item 1) to 12.0 – 13.0 Nm (105 – 115 lb in.).

ah. Apply a heavy coat of grease, XG-274, to the centre bearing journal of the camshaft (item 6) and the mating surface of the centre bearing (item 30).

ai. Assemble the centre bearing (item 30) to the bearing journal of the camshaft.

aj. Carefully slide the camshaft (item 6), rear bearing (item 45) and bearing retaining plate (item 43) with shims (item 44), into the housing as shown in fig. 107.

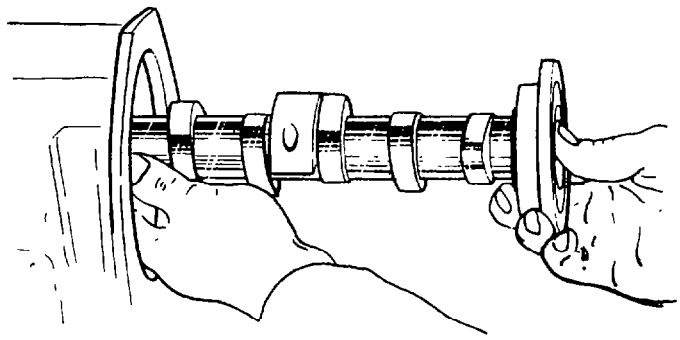

Fig. 107 — Installing Camshaft

ak. Ensure proper seating of the end plate (item 43) in the housing bore and install the screws (item 42). Torque the screws to 17.0 – 18.4 Nm (150 – 160 lb.in.).

al. With the camshaft (item 6) held firmly against the front bearing, visually check the alignment of the tappet roller and camshaft lobe through the supply pump bore. If not centred, add or remove shims (item 3) between the front bearing plate (item 2) and the bearing outer race.

am. Using a dial indicator, as shown in fig. 108, check to make certain that the camshaft runout at the small end of the taper does not exceed 0.13 mm (0.005 in.) for both ends of the camshaft. If necessary, replace parts as required to obtain acceptable runout.

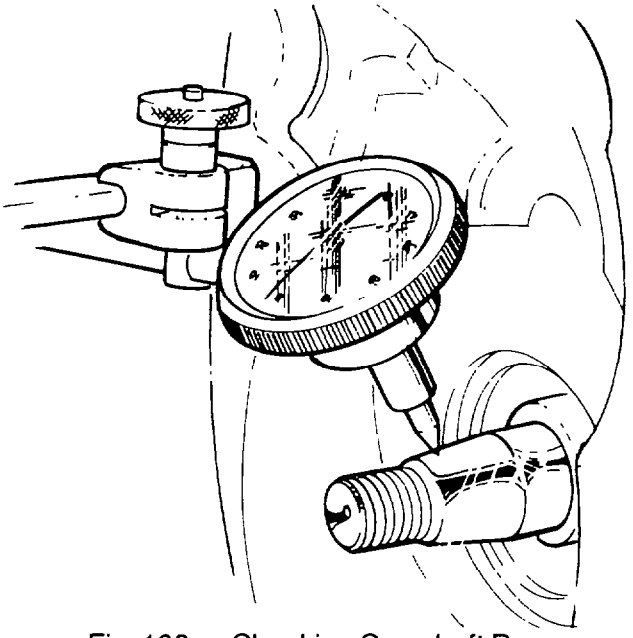

Fig. 108 — Checking Camshaft Runout

an. Check the camshaft for 0.003 - 0.13 mm (0.001 - 0.005 in.) end play using dial indicator and service tool TSE 7960 as follows:
   1. Position the supply pump actuating lobe of the camshaft to engage the jaw of barring tool TSE 7960.
   2 Install the dial indicator and barring tool onto the pump housing (item 1) as shown in fig. 109.
   3 Bar the camshaft to one end of the pump housing until it reaches a firm stop.
   4. Release force exerted on the bar.
   5. Note the dial indicator reading.
   6. Manually bar the camshaft in the opposite direction until it reaches a firm stop.
   7. Release the force exerted on the bar.
   8. Note the dial indicator reading with the difference between two readings being the end play.

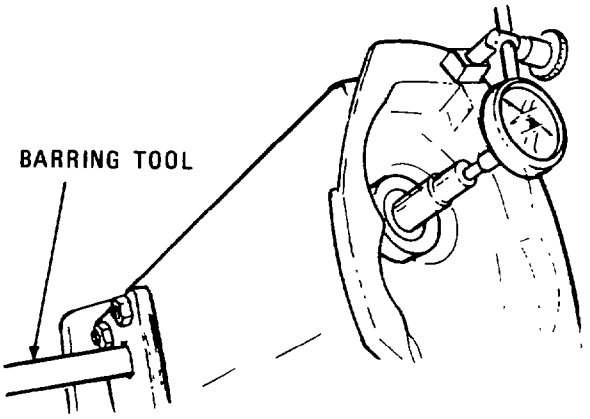


Fig. 109 — Checking Camshaft End Play

ao. Add or remove shims (item 44) from between the rear plate (item 43) and the housing. The bearing outer race is reset as required.
ap. After the alignment and end play are within specifications, remove the screws (items 1 and 42), apply "Loctite 271" to the threads of the screws and housing and re-torque the front bearing plate bolts (item 1) to 12.0 - 13.0 Nm (105 - 115 lb.in.) and rear bearing plate bolts to 17.0 - 14.4 Nm (150 - 160 lb.in.).
aq. Use a suitable drift to align the holes of the centre bearing (item 30) with the holes in the housing (item 7).
ar. Re-position the pump with the base down in vice and secure.

as. Use tool TSE 761 to raise the spring seat (item 24) and compress the spring (item 25). Remove the service pin TSE 76156B, then slowly release the tool until the roller (item 19) contacts the cam lobe as shown in fig. 110.

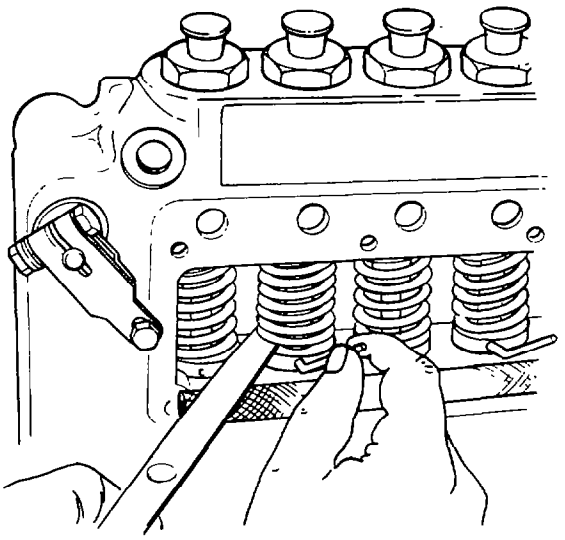

Fig. 110 — Removing Service Pin

at. Invert the pump housing to assemble the base enclosure plugs (item 17). Apply "Loctite 277" to both O.D. and I.D. plug of the housing bore.
au. Insert the plug into the housing 1.58 – 2.38 mm (0.062 – 0.094 in.) below the housing face.
av. Assemble the gasket (item 16), supply pump (item 15), washers (item 14) and nuts (item 13) to the pump. Torque the nuts (item 13) to 5.5 – 7.0 Nm (50 – 60 lb.in.).
aw. Apply grease XG-274 to the Woodruff key (item 5) and assemble to the camshaft.
ax. Assemble the drive hub, washer and nut as suited for the test stand. Torque the nut to 110 – 120 Nm (80 – 90 lb.ft.).
ay. Assemble the friction clutch assembly (item 41), washer (item 40) and nut (item 39). Torque the securing nut (item 39) to 54 – 60 Nm (40 – 45 lb.ft) while holding the camshaft stationary.
az. Assemble the gasket and governor to the pump. Tilt the governor, allowing link pin to enter compartment of housing, and engage the control rack (item 72).

NOTE: The Velbestos gasket is assembled dry.

ba. Assemble the governor fastening bolts (item 35) and lockwashers (item 36), and torque evenly to 11.2 – 12.2 Nm (100 – 110 lb.in.). The lockwire bolt must be assembled on the right hand side, second from top.
bb. Apply Loctite 567 sealant to the threads of the overflow valve (item 68) and assemble to the pump.
bc. Make certain that the control rack link pin in engaging the control rack (item 75) by oscillating the shutoff lever and checking the movement of the control rack at the drive end of the pump.
bd. Rotate the camshaft in a clockwise direction and check for binding parts.

34 Timing (Internal)

NOTE: 1. Unless otherwise stated, all numbers in parentheses ( ) refer to illustration numbers in fig. 90.
2. The injection pump is timed for port closing, it does not include a timing mark and, as a result, must be "timed" to the engine. However, to ensure an equal port closing positon between the six pumping units and a required clearance between the top of the plunger (at the top of the stroke) and bottom of the delivery valve assembly, the internal timing of the fuel injection pump must be checked and, if necessary, re-adjusted each time the pump is overhauled.
3. Internal timing may be accomplished in two ways. Both will yield the same results.

a. Method 1 — Gravity Flow Timing Procedure.
1. Mount the pump on the calibration test stand (see fig. 111).

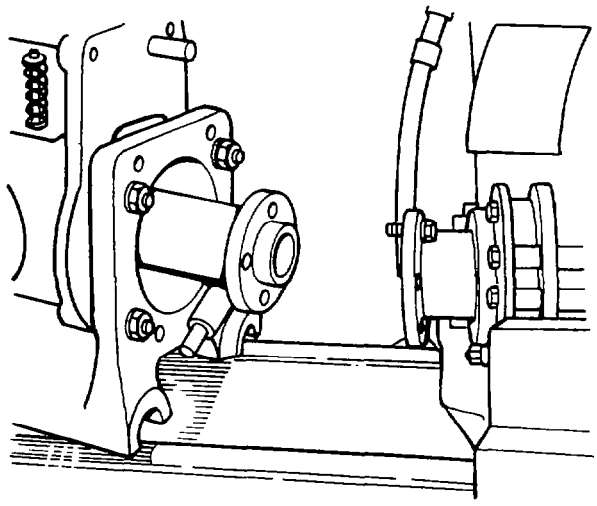

Fig. 111 — Mounting Pump on Test Stand



2. Secure and ensure no excessive radial or axial end play is apparent in the drive train.
3. Turn the pump camshaft in a clockwise direction until No. 1 tappet (item 20) begins to rise.
4. Remove No. 1 cylinder delivery valve securing nut (item 67), holder (item 65), spring (item 64) and delivery valve.
5. Substitute and install a delivery valve holder which has had the snubber valve (item 65) removed. Install the securing nut (item 67) and torque to 80 - 90 Nm (60 - 65 lb.ft) for cadmium plated or 115 - 120 Nm (85 - 90 lb.ft) for black oxide original finish.
6. Determine the base circle (plunger at lowest position) for No. 1 outlet by using a depth gauge or dial indicator. Record the degree of wheel reading and the base point.

NOTE: Turn the pump camshaft anti-clockwise to affirm the lowest possible reading.

7. Connect a suitable gravity feed set-up which will provide a 406 - 508 mm (16 - 20 in.) head to the fuel inlet in the pump housing.
8. Install 3.2 mm (⅛ in.) and 6.4 mm (¼ in.) NPT plugs to the overflow valve.
9. Assemble the timing leak-off tubing assembly — 51 - 76 mm (2 - 3 in.) long, fabricated from discarded engine tubing — onto No. 1 outlet.
10. Fill flow cup with clean filtered No. 2 fuel or test oil.
11. Secure the control rod (item 75) at full load rack extension of 29.8 mm (1.175 in.).
12. Allow test oil to flow freely from the No. 1 outlet to bleed off trapped air.
13. Slowly turn the pump camshaft in a clockwise direction until oil flow ceases. This is port closing.
14. Hold the pump camshaft in the port closing position. Shut off the oil supply. Remove the timing leak-off tubing assembly. Re-insert the depth gauge and record the dimension.
15. Subtract the reading taken at base circle (sub-para. 6.) from the reading taken at port closing (sub-para. 14.). The difference is the lift to port closing dimension.
16. Lift to port closing must be 3.00 - 3.20 mm (0.118 - 0.126 in.). Install a thicker spacer (item 22) to the tappet to decrease plunger lift to port closing or a thinner spacer to increase it.
17. If the spacer must be substituted, proceed as follows:
    (a) Rotate the camshaft back to base circle position.
    (b) Use tool TSE 761 to raise tappet knob (item 23) and disconnect the tappet shell (item 20) from tappet knob.
    (c) Extract the spacer (item 22) with a magnetic pencil and insert a new spacer.

NOTE: Each 0.20 mm (0.008 in.) vertical plunger movement equals 1° in timing.

    (d) Slowly release the tappet spring compression.
    (e) Return to procedural step (sub-para. 6.) and repeat all necessary steps until requirement is met.

*CAUTION:*
*Base circle readings change whenever the spacer is changed*

18. After the required lift-to-port closing is obtained, record the exact degree reading from the test stand degree wheel.
19. Turn the pump camshaft in a clockwise direction until No. 1 tappet is at its highest position.
20. Raise the tappet (item 20) with tool TSE 761 to ensure there is clearance between the plunger (at the top of stroke) and the delivery valve (item 63).

NOTE: 0.40 – 0.75 mm (0.016 – 0.030 in.) clearance dimension (reference).

21. Remove the leak-off tubing assembly, securing nut (item 67) and holder (item 65).
22. Re-install the delivery valve, spring (item 64), original holder (complete with snubber valve) (item 65), gasket (item 66) and securing nut (item 67). Torque the nut (item 67) to 80 – 90 Nm (60 – 65 lb.ft) for cadmium-plated nuts or 115 – 120 Nm (85 – 90 lb.ft) for black-oxided nuts.
23. Turn the pump camshaft in a clockwise direction and perform all necessary steps for timing the next firing outlet.

NOTE: After timing No. 1 outlet, lift dimension to port closing need no longer be checked. Timing each successive cylinder to angular requirements is sufficient.

24. Check to make certain that the port closing of each successive pump cylinder occurs at the following degree intervals with respect to port closing degree reading for No. 1 cylinder:

| Pump Cylinder No. | Port Closing to Occur (from degrees reading determined in sub-para. 18.) |
|---|---|
| 5 | 60° ± ¼° |
| 3 | 120° ± ¼° |
| 6 | 180° ± ¼° |
| 2 | 240° ± ¼° |
| 4 | 300° ± ¼° |

NOTE: Pump firing order is: 1-5-3-6-2-4.

25. If necessary, install a thicker spacer (item 22) to decrease the angle, or a thinner spacer to increase the angle.

NOTE: Clearance between plunger at top of stroke and delivery valve must be checked for each outlet to ensure correct assembly (refer to sub-paras 19. and 20.).

26. After all cylinders have been timed and checked, remove all timing equipment.

NOTE: Do not remove pump from the stand as calibration must be performed.

b. Method 2 — Pressure Timing Procedure.
1. Mount pump on calibration test stand.
2. Secure the pump and ensure no excessive radial or axial end-play is apparent in the drive train.
3. Turn the pump camshaft in a clockwise direction until No. 1 tappet (item 20) begins to rise.
4. Mount a dial indicator with an offset spindle on the pump or test stand so that the spindle bears against No. 1 tappet as shown in fig. 112.

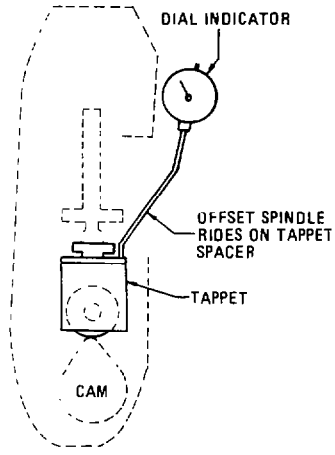


Fig. 112 — Dial Indicator on Tappet

5. Assemble the bleed-off valves (part of pressure timing set-up), Bacharach 67-2824 or equivalent to the holder assemblies as shown in fig. 113.

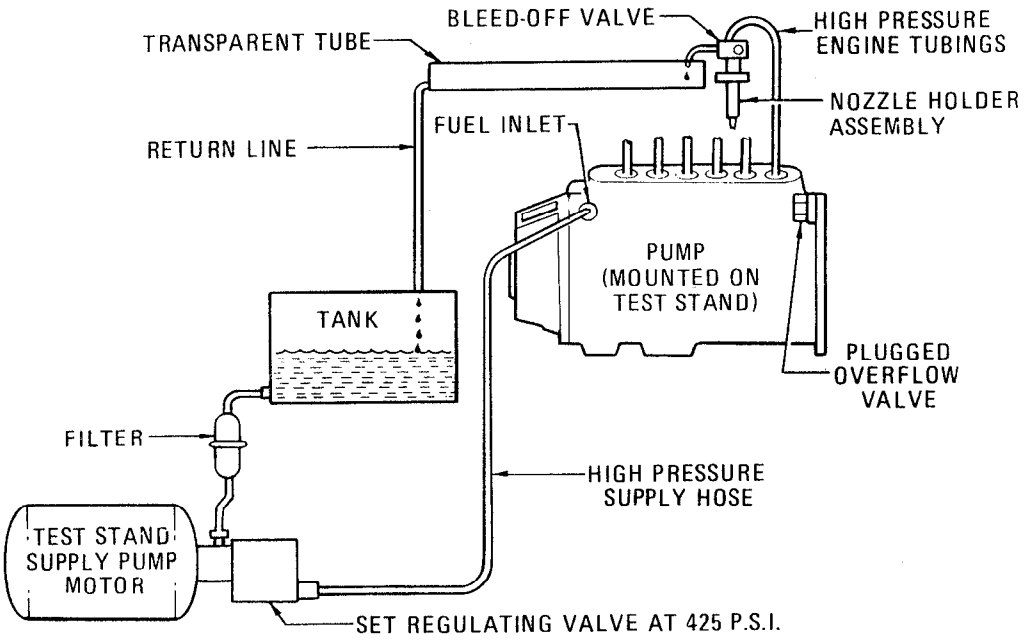


Fig. 113 — Pressure Timing Set-up

6. Install the nozzle and holder assemblies (with bleed-off valves) to the test stand.
7. Connect the high pressure tubings to the pump outlets and bleed-off valve connections.
8. Connect the pressure timing system consisting of an oil tank with clean test oil, filter, test stand supply pump, high pressure hose and transparent plastic hoses as illustrated in fig. 113.
9. Ensure that all bleed-off valves are closed.
10. Turn the pump camshaft in an anti-clockwise direction until No. 1 outlet is at base circle.
11. Install 3.2 mm (⅛ in.) and 6.4 mm (¼ in.) NPT plugs to the overflow valve.
12. Secure the control rod (item 75) at full load rack extension of 29.8 mm (1.175 in.).
13. Adjust the dial indicator to zero ("0").
14. Supply test oil at 2 930 kPa (425 psi) to the pump fuel inlet.
15. Open the bleed-off valve for No. 1 outlet and observe a steady, clean stream of test oil flowing from the discharge tubing of the valve.
16. Turn the camshaft slowly clockwise until the stream of oil is reduced to droplets (one drop per 5 – 10 seconds). This is port closing.
17. Hold the pump camshaft in the port closing position. Shut off the oil supply. Read the dial indicator for plunger lift-to-port closing; dimension must be 3.00 – 3.20 mm (0.118 – 0.126 in.).
18. Install a thicker spacer (item 22) to the tappet to decrease the plunger lift-to-port closing or a thinner spacer to increase it.
19. If a spacer must be substituted, proceed as follows:
    (a) Rotate the camshaft back to the base circle position.
    (b) Use tool TSE 761 to raise the tappet knob (item 23) and disconnect the tappet shell (item 20) from the tappet knob.
    (c) Extract the spacer (item 22) with a magnetic pencil and insert a new spacer.

NOTE: Each 0.20 mm (0.008 in.) vertical plunger movement equals 1° in timing.

    (d) Slowly release the tappet spring compression.
    (e) Return to procedural step (sub-para. 13.) and repeat all necessary steps until the requirement is met.
20. After required lift-to-port closing is obtained, record the exact degree reading from the test stand degree wheel.
21. Close the bleed-off valve on No. 1 outlet.
22. Turn the pump camshaft clockwise until No. 1 tappet is at the highest position.
23. Raise the tappet (item 20) with tool TSE 761 to ensure that there is clearance between the plunger (at the top of stroke) and delivery valve (item 63).

NOTE: 0.40 – 0.75 mm (0.016 – 0.030 in.) clearance dimension (reference).

24. Turn the pump camshaft clockwise and perform all necessary steps for timing the next firing outlet.

NOTE: After timing No. 1 outlet, lift dimension to port closing need no longer be checked. Timing each successive cylinder to specific angular requirements is sufficient.

25. Open the bleed-off valve for the next firing cylinder.

NOTE: Pump firing order is 1-5-3-6-2-4.

26. Check to make certain that port closing of each successive pump cylinder occurs at the following intervals with respect to port closing degree reading for No. 1 cylinder:

| Pump Cylinder No. | Port Closing to Occur (from degree reading determined in sub-para. 20.) |
|---|---|
| 5 | 60° ± ¼° |
| 3 | 120° ± ¼° |
| 6 | 180° ± ¼° |
| 2 | 240° ± ¼° |
| 4 | 300° ± ¼° |

27. If necessary, install a thicker tappet spacer (item 22) to decrease the angle or a thinner spacer to increase the angle.

NOTE: Clearance between the plunger at the top of the stroke and the delivery valve must be checked for each outlet to ensure correct assembly.

28. After all cylinders have been timed and checked, remove all timing equipment.

NOTE: Do not remove the pump from the stand as calibration must be performed.

35 Pressure Testing

NOTE: To ensure that there is no fuel leakage from any portion of the pump, the following test must be performed.

a. Close off the overflow valve (item 68) with 3.2 mm (¼ in.) and 6.4 mm (¼ in.) NPT plugs.

b. Connect a suitable pressure source of approximately 1725 kPa (250 psi) to the fuel inlet hole in the pump housing.

NOTE: The pump should be mounted on the test stand and the high pressure tubing should be in place prior to applying pressure to the pump in order to keep the delivery valve assemblies from opening.

c. Slowly apply fuel pressure to the pump until a pressure of 1725 kPa (250 psi) is achieved. A rapid pressure drop indicates that a leak is present.

NOTE: Always check to make certain that all external connections are tight.

> *CAUTION:*
> *Do not exceed a pressure of 2 930 kPa (425 psi) for this test.*

d. Visually inspect for the following:

1. Oil leakage at the delivery valve retaining nut (item 67). To correct: remove the delivery valve assembly (item 63), replace O-ring (item 63) and re-install parts, torque the nut (item 67) to 80 – 90 Nm (60 – 65 lb.ft) for the cadmium plated nut, or 115 – 120 Nm (85 – 90 lb.ft) for black oxided nut.
2. Oil leakage at the barrel locating screw (item 73). To correct: remove the screw (item 73), replace the copper gasket (item 72), re-install the screw (item 73) and torque to 10.0 – 11.0 Nm (90 – 100 lb.in.).
3. Oil leakage between the barrel and the housing. To correct: remove and inspect the barrel for cracks or damaged seat and the housing seat for damage or foreign material; repair or replace parts as required and reassemble the pump.
4. Oil leakage between the plunger and barrel (very gradual leakage between the plunger and barrel is permissible). To correct: replace excessively worn plunger and barrel assemblies.
5. Oil leakage through the housing wall (sump area). To correct: replace the pump housing.
6. Oil leakage at the fuel oil gallery sealing plug. To correct: replace with fabricated new plug.

e. After eliminating all leaks, disconnect the pressure source and remove temporary pipe plugs.

36 Calibration — Preliminary Checks

NOTE: 1. Unless otherwise stated, all numbers in parentheses ( ) refer to illustration numbers in Figure 90.
2. Before calibrating the injection pump, check the condition of delivery valves (item 63) as these have great influence on fuel delivery. The test procedure for the delivery valves is described in Note ① after Table 4.

a. Check to ensure that the pump is secured, aligned and properly connected to the test stand.

b. Check the pressurised lubricating oil system for:
1. Minimum supply pressure — 140 kPa (20 psi).
2. Continuous flow from return line to tank.

NOTE: OMD115 lubricating oil must be used.

c. Check fuel supply system for:
1. Calibrating oil (Viscor 1487 calibration oil or equivalent) at a temperature of 38 – 41 °C (100 – 105 °F).

NOTE: The test oil temperature is to be taken at the fuel inlet in the pump housing.

2. Restrictions to inlet and outlet hoses, must be corrected as necessary.

NOTE: All test oil supply and return lines must be 10.0 mm (⅜ in.) I.D. (minimum) flexible hose. 10.0 mm (⅜ in.) I.D. transparent hose is recommended so that air bubbles (leaks) between the tank and pump inlet can be visually observed and eliminated from the system before calibration. If air is present in the system, loosen the nut (over the check valve) at the inlet side of the supply pump and allow to bleed, then re-torque to 41 – 47 Nm (30 – 35 lb.ft).

d. Check the high pressure tubings for:
1. Any sharp turns or bends.
2. Leaks at tubing union nuts.
3. Correct inside diameter; replace if the tubing I.D. is crimped.

NOTE: Tubing must be thoroughly flushed prior to correcting.

e. Note that each nozzle and holder is stamped with a single-digit number (designating engine cylinder number) which must be connected, in sequence, to the matching injection pump cylinder (starting with No. 1 at the drive end).

NOTE: Nozzles and holders must be tested and adjusted (and, if necessary, repaired or replaced) prior to any calibration.

37 Preparations and Run-in

NOTE: Since one revolution of the pump camshaft is required to provide a single injection from each pump outlet, the test stand counter must be set for the number of strokes indicated in the pump calibration specifications (one stroke for each revolution).

a. Before filling the system with test oil, check the hand primer for proper operation. With all connections tight, operate the hand primer plunger. A moderate flow of oil from the injection pump outlet hole, indicating the system is primed, should occur within 1 or 2 minutes — otherwise, repair or replace the hand primer and/or replace the supply pump check valve(s). Repeat the test until adequate priming is achieved.

b. Assemble the operating lever assembly to the governor operating shaft and lock the lever in the idle position.

NOTE: Always start the test stand in the lowest variable speed position.

> *CAUTION:*
> *Make certain that the operating lever is in the idle position before starting the test stand.*

c. Start the lubricating oil supply pump. The lubricating oil pressure must be 140 – 275 kPa (20 – 40 psi).

d. Start and operate the test stand; operate it at a low speed (400 – 500 rev/min) and observe fuel flow through the hose.

e. Place the operating lever in the full load position.

f. Loosen one or more high pressure tubing nuts until the high pressure areas of the pump are primed, then re-tighten the nuts.

g. Allow the pump to warm up for 5 – 10 minutes.

h. Check the overflow valve regulating pressure. The valve must regulate pump pressure to between 68 – 100 kPa (10 – 16 psi) at 300 rev/min (low idle speed of pump)

38 Calibration Procedure

a. Back out the droop screw and deactivate the stop plate assembly (move toward the pump). This is done to provide sufficient control rack (item 75) travel to adjust the pump.

b. Start the test stand with the operating lever in the idle position and increase the pump speed to 1050 rev/min full load speed.

c. Move the operating lever into the full load position and adjust the governor stop plate horizontally to contact the cam nose at 29.845 mm (1.175 in.) full load rack extension as shown in fig. 114.

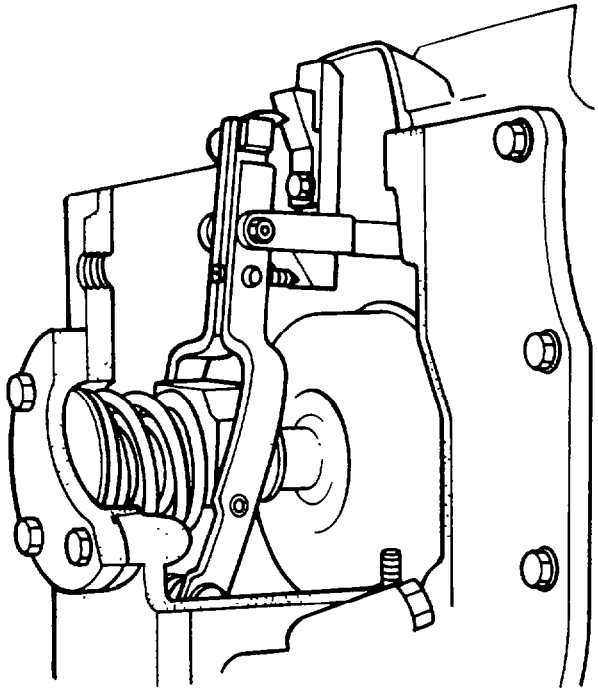

Fig. 114 — Cam Nose/Stop Plate Relationship at Full Speed RPM

NOTE: When checking or adjusting fuel deliveries, there must be no excessive vibration or oscillation in the fulcrum lever or control rack. The test stand may cause such behaviour and this must be corrected before making any adjustments to the pump.

d. Adjust all pump cylinders to 83.0 – 87.0 cc/500 strokes or 50.0 – 52.5 cc/300 strokes fuel flow by loosening the segment screws (fig. 90, item 28) and rotating the control sleeves (fig. 90, item 27) with adjusting pin TSE 7695 as shown in fig. 115. Re-torque the segment screws to 5.0 – 5.5 Nm (45 – 50 lb.in.).

NOTE: The variation between cylinders must be kept to a minimum. Maximum allowable variation between outlets at full load speed is 4 per cent.

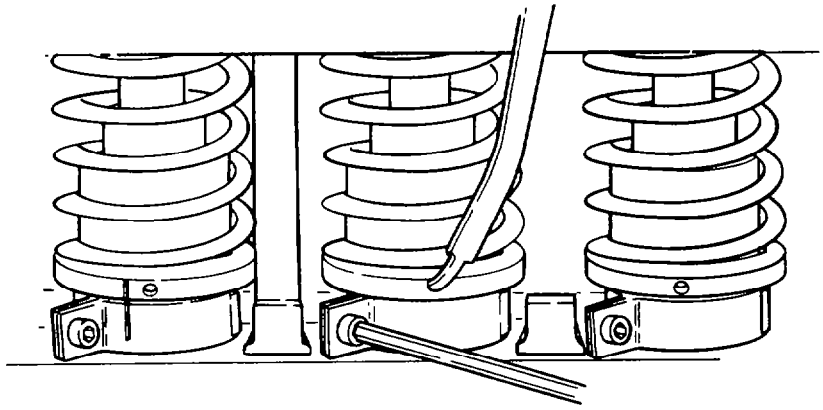

Fig. 115 — Adjusting Segments

e. Increase the pump rev/min to cam breakaway speed of 1085 – 1095 rev/min and adjust the high speed screw so that the cam nose begins to leave the stop plate (0.0254 – 0.127 mm (0.001 – 0.005 in.) clearance between cam nose and stop plate).

f. Move the shut off lever (fig. 90, item 49) to the shut off position; delivery must stop completely.

g. Reduce the pump rev/min to stop plate vertical adjustment speed of 700 rev/min.
h. Install the adjusting screw into the threaded hole in top of the stop plate and set the vertical position of the stop plate and cam nose for a required flow of 100.5 ± 2.5 – 104.5 ± 2.5 cc/500 strokes or 60.5 ± 1.5 – 63 ± 1.5 cc/300 strokes (see fig. 116).

NOTE: Both horizontal and vertical set points must be within the fuel flow specifications. Continue to adjust horizontally and/or vertically to obtain the correct fuel flow.

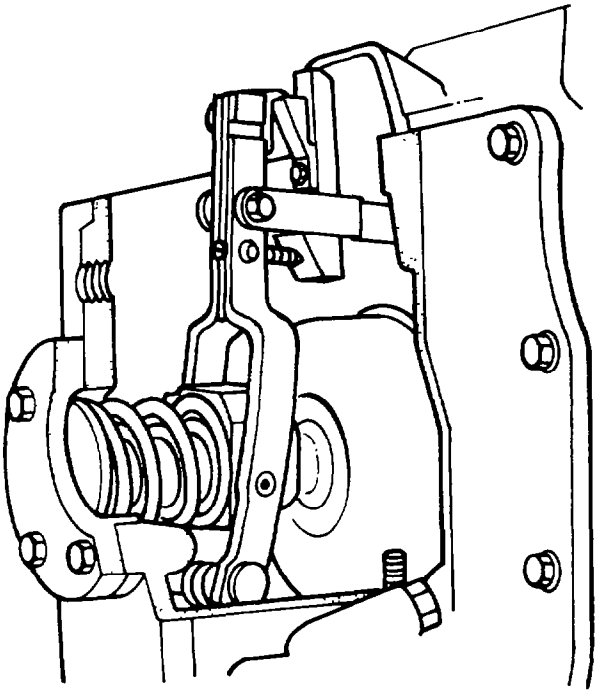

Fig. 116 — Cam Nose/Stop Plate Relationship at Stop Plate Vertical Set Point

i. Reduce the pump speed to 600 rev/min, adjust the droop screw to contact the stop plate and obtain a delivery of 113 ± 3.0 – 117 ± 3.0 cc/500 strokes or 68 ± 2.0 – 70.5 ± 2.0 cc/300 strokes (see fig. 117).

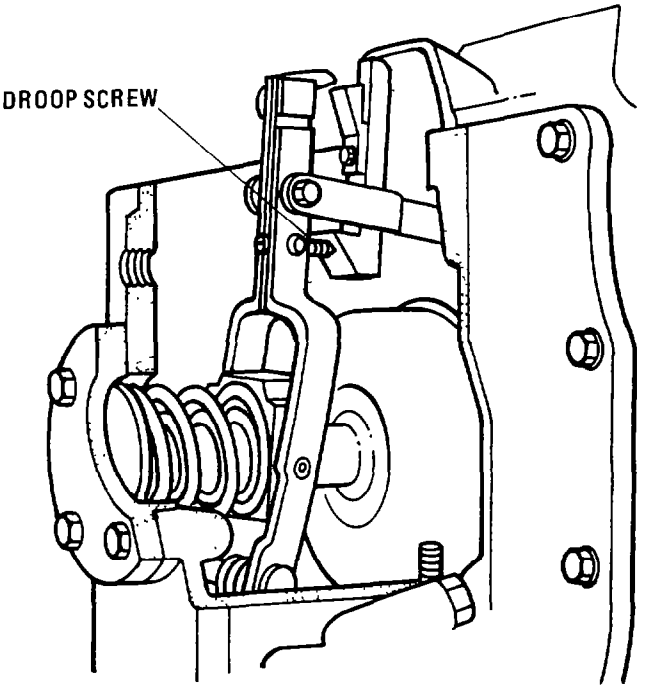


Fig. 117 — Droop Screw/Stop Plate Relationship at a Set Point

j. Set the pump to 800 rev/min for puff limiter extension (PLE) requirements.

1. Thread the locknut (fig. 118, item 2) onto the adjusting bolt (item 1) and install the bolt into the gauge cap (item 3).

NOTE: The PLE dimension is determined using a specially fabricated tool.

2. Install the gauge cap (item 3) and clamping plate (item 5) over the control rack and onto the mounting face of the injection pump. Install the spacers (item 6), nuts (item 7) and retaining bolts (items 4 and 8) and tighten the bolts securely.

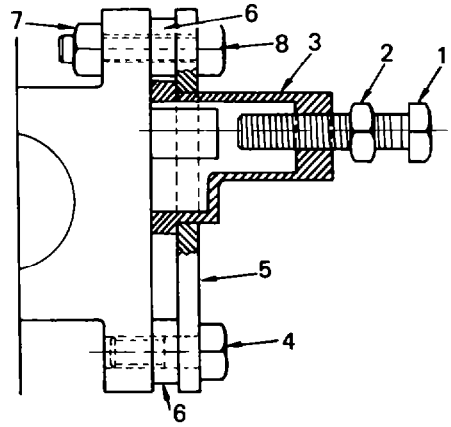


Fig. 118 — Installing "PLE" Gauge

3. Set the adjusting bolt (item 1) on the gauge to obtain a fuel flow delivery of 59.0 – 63.0 cc/500 strokes or 35.5 – 38.0 cc/300 strokes (see also fig. 119). Lock the adjusting bolt in position by tightening the locknut (item 2) against the gauge (item 3) and recheck the fuel delivery figures.

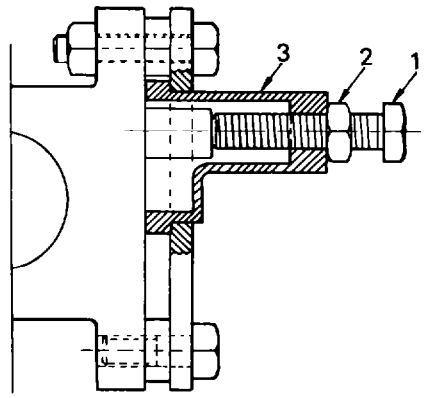


Fig. 119 — Setting "PLE" Gauge

4. To determine the PLE dimension, remove the gauge from the injection pump. Use a depth gauge to measure the distance from the gauge cap mounting flange to the end of the adjusting bolt. This dimension is then subtracted from the gauge cap length, the resulting figure being the PLE dimension. An example of obtaining this dimension is shown in fig. 120.

**Example:**

| | | |
|---|---|---|
| Length of gauge cap — | 54.406 | (2.142) |
| Minus the distance between the gauge cap flange and bolt end — | 28.752 | (1.132) |
| PLE Dimension — | 25.654mm | (1.010 in.) |

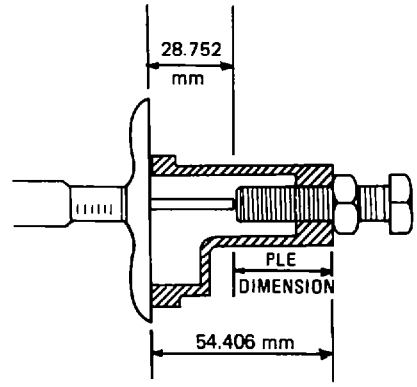


Fig. 120 — Determining "PLE" Dimension

5. Compare the figures obtained for the PLE dimension with those stamped on the injection pump as shown in fig. 121. Restamp if figures differ.

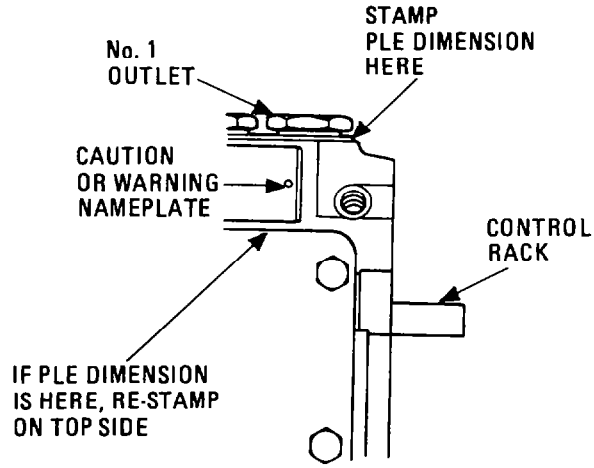


Fig. 121 — "PLE" Stamping

k. Reduce the pump speed to 300 rev/min (low idle speed), secure the operating lever in the low idle position and adjust the idle screw to obtain a delivery of 12 - 20 cc/500 strokes or 7 - 12 cc/300 strokes (see fig. 122).

NOTE: Variation in idle delivery between cylinders must not exceed 6 cc for 500 strokes.

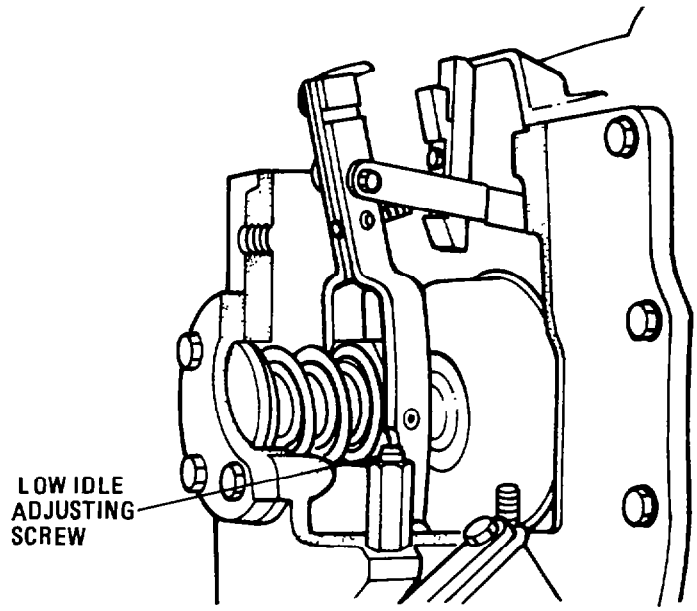


Fig. 122 — Low Idle Set Point

l. Secure the operating lever in the full load position, reduce the pump speed to 75 rev/min and check that the starting delivery is 12.0 cc — minimum of 100 strokes. Delivery requirements must be met without any adjustment being made.
m. Stop the test stand.
n. Tighten the stop plate securing screw and remove the adjusting screw.
o. Check the "K" dimension (this is the horizontal dimension from the upper vertical face of the stop plate to the inner machined vertical surface of the governor housing), with tool TSE 79100 as shown in fig. 123.

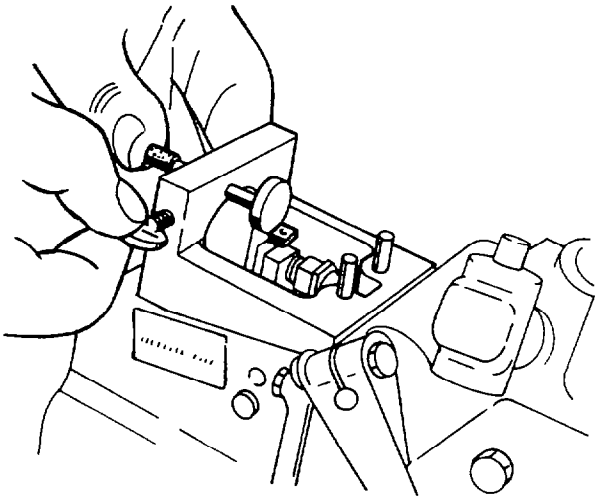

Fig. 123 — Footed Pin Touching Upper Vertical Face of the Stop Plate

p. Use a depth micrometer to measure the distance between the top front side of the dowel pins and the footed pin on the dimension tool (see fig. 124). This is the "K" dimension.

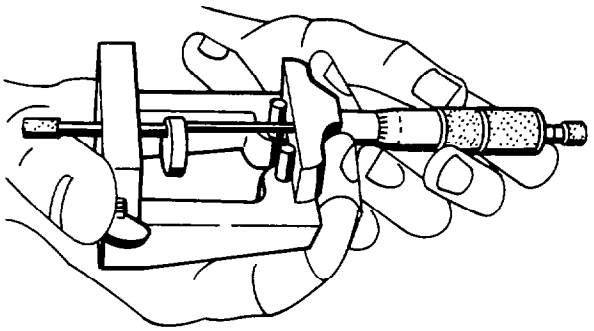

Fig. 124 — Measuring Distance to Determine the "K" Dimension

q. Re-stamp the "K" dimension on the governor housing if necessary. Fig. 125 shows the location of the "K" dimension.

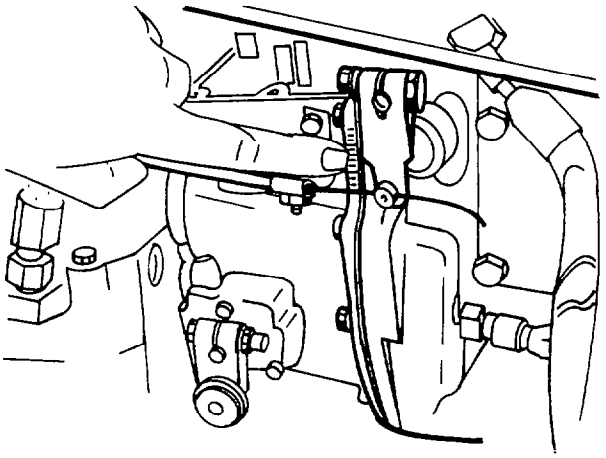

Fig. 125 — "K" Dimension Stamped on Governor Housing

r. Re-inscribe the mark on the control sleeve (fig. 90, item 27), this must be in line with the mark on the gear segment (item 28).
s. Disconnect and remove the pump, nozzle and holder assemblies from the test stand.

t. Assemble the gasket (item 9), timing window cover (item 10), washers (item 11) and screws (item 12) to the pump. Position two lockwire screws at the bottom of the cover, one above the supply pump and the other in the centre of the cover. Torque the screws to 10.5 – 11.0 Nm (95 – 100 lb.in.). Install lockwire and "Tamper Proof" seal SE1001.

NOTE: The Velbestos gasket is to be assembled dry.

u. Assemble the top cover, gasket, plug, washers and screws to the governor. Position two lockwire screws on the operating lever side of the governor. Torque the screws to 5.5 – 7.0 Nm (50 – 60lb.in.) and install lock wire and a "Tamper Proof" seal SE1001. The Gulmite screw is to be staked in two places, 180° apart.

NOTE: The Velbestos gasket is to be assembled dry.

v. Assemble the governor dust covers and screws to the governor. Torque the screws to 5.5 – 7.0 Nm (50 – 60 lb.in.). Lockwire the dust cover screw and governor mounting screw. Wire through the top of the dust cover and install a "Tamper Proof" seal SE1001.

w. Install protection caps on all fittings and plugs in all openings.

x. Remove the drive coupling securing nut and washer from the camshaft; use pullers (and spacer if required) to remove the drive hub.

y. Lockwire the front bearing retaining screws (item 1).

39 Fuel Injectors. To remove the fuel injector nozzles proceed as follows:

a. Wash the cylinder head area around the nozzles and wash all tubing connections, then blow dry with compressed air.

b. Remove the leak-off lines from the nozzles and retain the small copper gaskets.

c. Remove the high pressure fuel lines, and plug off the ends of the lines to prevent dirt entering the lines.

d. Remove the nozzle retaining nuts and carefully remove the nozzles from the cylinder head and place them in a suitable rack in numerical order, so that the nozzles can be reinstalled into the cylinders from which they were removed.

> *CAUTION:*
> *Do not strike the nozzle tip on the cylinder head or on the rack, as this can damage the small spray holes.*

NOTE: To remove a stuck nozzle, apply penetrating oil around the nozzle body, remove the leak-off adapter and install the puller adapter into the nozzle holder body. Attach the injection nozzle puller No. S-572 to the adapter and remove the nozzle.

e. After removing the nozzle(s) from the head, plug the nozzle cavities with a suitable plug to prevent dirt or small particles from falling into the cylinder.

40 To disassemble the fuel injector nozzles proceed as follows:

> *CAUTION:*
> *All work on the nozzle and holder assembly must be performed in a clean area. Dirt and/or filings can damage the highly polished parts.*

a. Presoak the nozzle and holder assembly in a carbon removing cleaning agent.

b. Wash all external dirt, grease and carbon deposits from the assembly.

c. Place the nozzle and holder assembly in the disassembly jig TSE 77105 and slowly loosen the cap nut until it can be removed by hand see fig. 126.

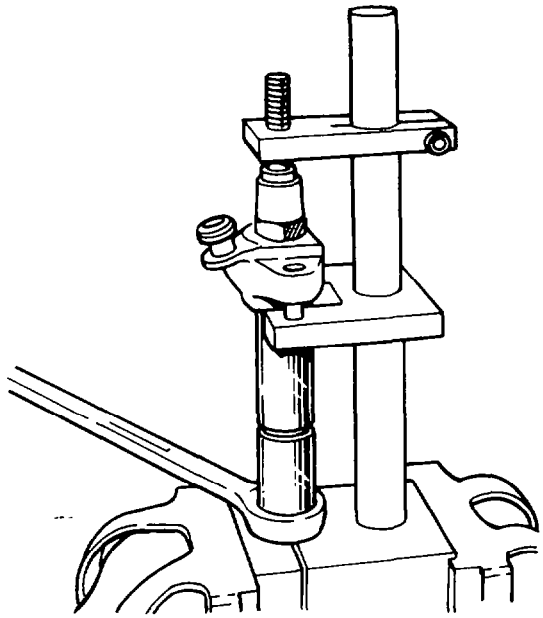

Fig. 126 — Disassembly Jig

d. Remove the nozzle and holder assembly from the fixture and remove the cap nut.

> *CAUTION:*
> *Avoid dropping the nozzle and/or spacer when removing the cap nut.*

e. Remove the nozzle and all internal parts from the holder body.

41 Cleaning

a. Wash all parts in a suitable cleaning solvent.
b. Blow out all ducts with dry, filtered compressed air.
c. Soak the nozzle in a suitable varnish-removing cleaning agent. Make certain the nozzle valve slides freely in the nozzle body.
d. Probe all nozzle spray holes using needle orifice cleaner TSE 7729 see fig. 127.

> *CAUTION:*
> *Use care during cleaning of these holes to prevent breakage of the needle; it is difficult and often impossible to remove the broken pieces.*

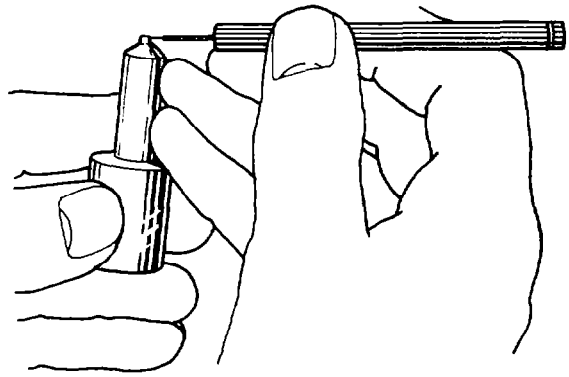

Fig. 127 — Cleaning Nozzle Body Fuel Discharge Holes

e. Blow compressed air through the spray holes to remove foreign particles.
f. Thoroughly clean (wash) the nozzle valve and body I.D. to remove all dirt, varnish and other foreign deposits.
g. Clean the internal section of the nozzle cap nut. The nozzle holding surface and threads must be free of blow-back carbon. Soak to loosen, then clean with a wire brush.

42 Inspection

a. Inspect the holder body for damaged threads, damaged high pressure tubing seal, damaged leak-off connection and body cracks. Replace the holder body if any of these conditions exist.
b. Inspect the high pressure seating face of the holder body. If scratched or scored, lap the sealing face on a lapping plate using polishing tallow 66—0660(B) until the surface is smooth (mirror finish) and flat.
c. Inspect the pressure adjusting shims. If scored or damaged, replace the shims.
d. Inspect the pressure adjusting spring for worn ends and broken or chipped O.D. Replace the spring if these conditions exist.
e. Inspect the lower spring seat. Replace if scored, damaged or worn from spring or nozzle valve stem contact.
f. Inspect the spacer, replace if it is cracked, has damaged threads, damaged copper gasket seat or damaged inner (nozzle) seating surface.
g. Inspect the nozzle and replace if it is cracked, damaged, has a broken stem, a scored valve O.D. and/or body I.D., or if the tip is broken.

> *CAUTION:*
> *Never use grinding or lapping compound on the valve and seat as it will destroy line contact.*

h. Inspect the nozzle sealing face. If scratched, lap on a lapping plate using polishing tallow 66—0660(B) until the surface is smooth (mirror finish) and flat.
i. Check that the nozzle valve moves freely in the nozzle body. To do this lift the valve about one-third its length out of the nozzle body; the valve should slide back to its seat without aid when the assembly is held at a 45 degree angle. If necessary, work the valve in the valve body using polishing tallow, TSE 7723. Clean the nozzle body and valve in solvent and blow dry with filtered compressed air.
j. Check the nozzle valve lift using a straight edge and a dial indicator. Place the nozzle body in a soft jaw vice, install and zero the dial indicator on the end of the nozzle valve and position the straight edge across the nozzle body. Using a pair of tweezers raise the valve until it contacts the straightedge. Check the amount of lift shown on the dial indicator, this should be 0.355 mm (0.014 in.). See fig. 128. Replace if it varies.

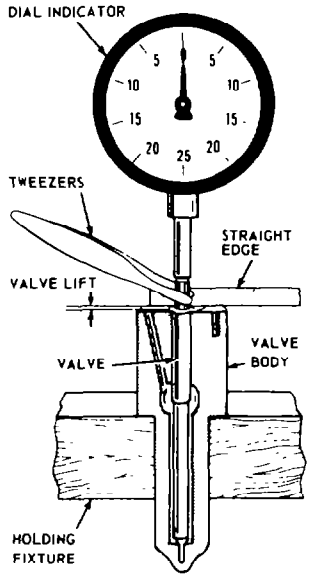


Fig. 128 — Method of Checking Nozzle Valve Lift

43 Reassembly

a. Dip all parts in clean test or fuel oil.
b. Clamp the holder body upright in a soft-jawed vice.
c. Insert spacers and shims in the nozzle holder.

NOTE: Spacers must always be on either side of the shims (i.e., one spacer next to the holder body and one next to the spring). Assemble the flat side of the spacer toward the shim.

d. Insert the pressure adjusting spring and lower the spring seat into the holder body.
e. Assemble the valve stop spacer aligning dowel pins with dowel pin holes in the holder body. Assemble with chamfered side towards the nozzle.
f. Dip the nozzle valve in clean test oil and assemble in the nozzle body. Work the valve up and down several times to ensure free movement of the valve in the nozzle body.
g. Align the dowel pin holes in the nozzle body with the dowel pins and assemble the nozzle to the valve stop spacer.
h. Assemble the cap nut over the end of the nozzle and rotate it clockwise for two or three turns. Tighten the cap nut to a final torque of 60-67 Nm (45-50 lb.ft).

44 Installation

a. Check to make certain that the copper nozzle tip gasket is removed from the nozzle cavity in the cylinder head.
b. Clean the nozzle cavity with reamer J-23303 and wire brush AC-12. Check the copper gasket seat for trueness and cleanliness.
c. Crank the engine over by hand to blow out loose carbon from the nozzle cavity, then using a rod or screwdriver, push the end of a clean rag into the cavity and wipe the gasket seat clean.
d. Apply a light coat of "Anti-Seize 716" to the shank area of the nozzle and holder assembly. This will prevent binding and allow for easy removal.
e. Install nozzles into the cylinder head using new nozzle tip copper gaskets.

NOTE: Apply a small amount of grease (XG 274) to the upper surface of the copper gasket to make it adhere to the nozzle and prevent it from falling off when installing the head.

f. When the nozzle is properly seated, install the nozzle retaining nuts on the studs. Tighten down both nuts evenly to prevent cocking of the holder and binding of internal parts.
g. Torque the nuts to 19 – 23 Nm (14 – 17 lb.ft). Do not exceed the upper torque limit.
h. Install the high pressure fuel lines onto the nozzles. Use care not to over-tighten the nuts as this could reduce the bore of the fuel lines, thus changing the injection characteristics.
i. Install the leak-off lines and copper gaskets.
j. Start the engine and check all fuel line connections for leaks; retighten if necessary.

## Governor

NOTE: Unless otherwise stated, all numbers in parentheses ( ) refer to illustration numbers in Figure 129.

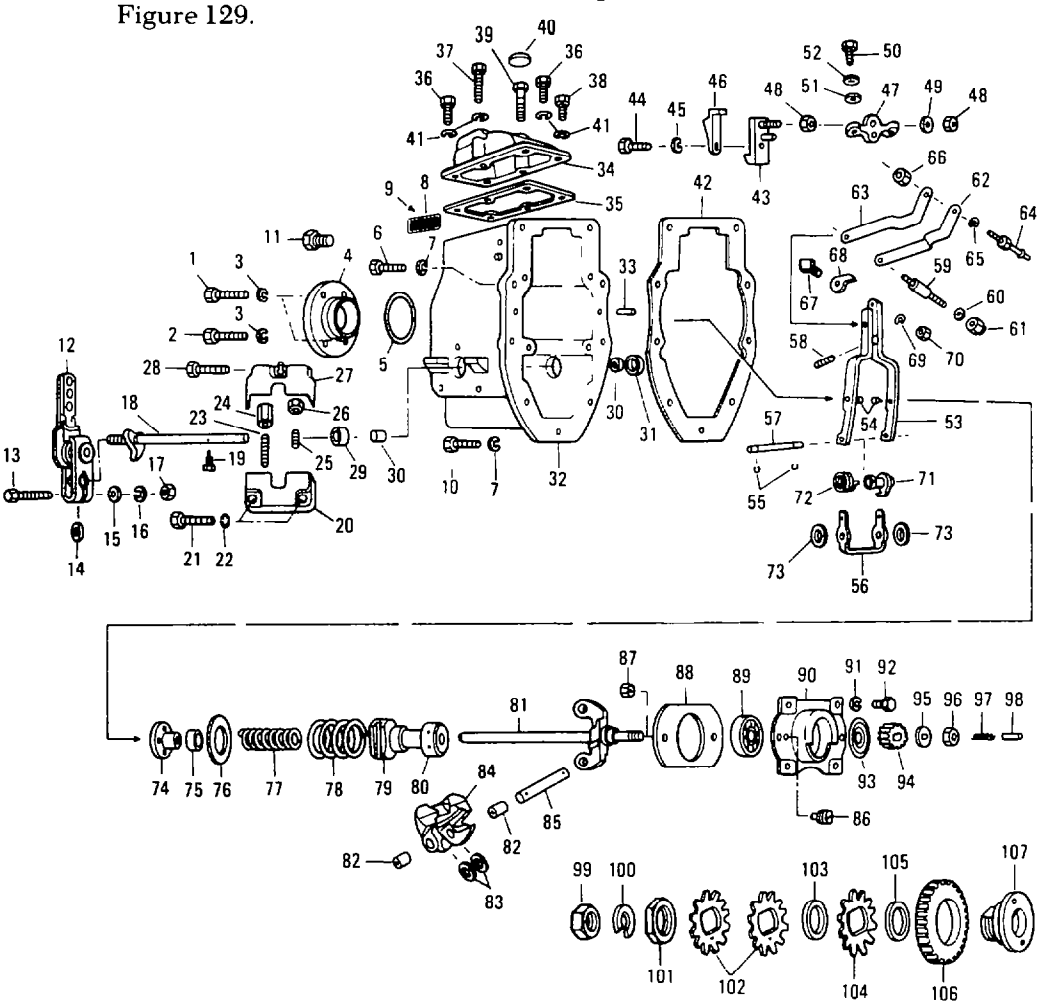

Fig. 129 — Exploded View of GVB/E 6881 Governor

45 Disassembly

a. Remove the governor inspection cover (fig. 129, item 34), gasket (item 35) and screws (items 36 to 40).

b. Remove two screws (item 50) and lockwashers (items 51 and 52) and remove the stop plate assembly (item 43 to 48) from the governor housing (item 32).

c. Remove the operating lever covers (item 20 and 27).

d. Remove the set screw (item 19) from the operating shaft spring hub (item 71).

e. Withdraw the operating lever shaft (item 18) and remove the spring hub (item 71).

f. Remove the end cap screws (items 1 and 2), the end cap (item 4). the rear spring seat (item 74), shims (items 75 and 76) and springs (items 77 and 78).

g. Unscrew the four fastening screws from the front bearing bridge (item 90) and carefully slide the governor weight shaft assembly (items 81 to 85) from the governor housing (item 32).

h. If the operating lever shaft bushes (item 30) and oil seal (item 29) need replacing remove with tool TSE 7936.

i. Withdraw the fulcrum lever assembly (item 53 to 68) and sleeve (item 79) from the governor housing (item 32).

j. Remove the weight lubricating plunger (item 98) and spring (item 97). Remove the nut (item 96), washer (item 95), slinger (item 93) and driven gear (item 94).

k. Use an arbor press to remove the shaft (item 81) from the ball bearing (item 89) and bridge (item 90).

l. Use an arbor press and tool TSE 79104-4) to remove the weight pins (item 85).

m. Use a weight pin (Part No. 79100-1) to check the inside diameter of the weight bush (item 82). If it is necessary to remove the bush (item 82), use tool TSE 79104-5.

n. Remove the adjusting nut (item 101), the two outer spring discs (item 102), the spacer (item 103), the inner spring disc (item 104), spacer (item 105) and the driven gear (item 106) from the drive hub (item 107).

46 Inspection

a. Check the O.D. for the seals (item 29 and 31) used with the cut-off operating shaft (item 18) as well as the housing bore.
b. Check the drive and driven gears (items 103 and 94) for wear, or broken teeth.
c. Check the spring discs (item 102 and 104) for damage or wear.
d. Check the surface on the face of the drive gear (item 106) for excessive wear.
e. Check the ball bearings (item 80 and 89) for excessive wear or roughness.
f. Inspect the governor springs for nicks, rust spots, or signs of corrosion.
g. Inspect the sliding sleeve assembly (item 79) for wear in the grooves; check the thrust washer face for wear and freeness, and check the bushing for wear. A clearance up to 0.25 mm (0.010 in.) is permissible.
h. Check that the flyweights (items 82 to 84) move freely on the weight pins (item 85), but not loosely. A clearance of 0.02 – 0.10 mm (0.001 – 0.004 in.) is allowable.
i. Inspect the fulcrum lever pivot pins (item 54), bracket (item 56), control rack linkage pin (item 64) and droop screw (item 58) for wear.
j. Replace the smoke cam (item 68) if contact point (end) exhibits wear.
k. Inspect the operating lever shaft (item 18) for bends, worn serrations, or loose stop plate.
l. Check the maximum fuel stop plate assembly (item 43 to 49) for wear caused by the smoke cam (item 68).
m. Replace the torsion spring (item 72) during repair.

47 Reassembly

NOTE: Prior to assembling, immerse all parts in clean engine oil to lubricate.

a. Install the drive hub (item 107) onto the camshaft, along with the lockwasher (item 100) and nut (item 99). Torque the nut to 54 – 60 Nm (40 – 45 lb.ft).
b. Assemble the drive gear (item 106) to the hub (item 107) and install the spacer (item 105), spring disc (item 104), spacer (item 103) two spring discs (item 102), and adjusting nut (item 101). Torque the adjusting nut to 109 to 115 Nm (80-85 lb.ft).
c. Check that a torque of 9.5 to 10.2 Nm (7-7½ lb.ft.) is required to cause the drive gear (item 106) to slip on the drive hub (item 107). If the torque specifications are not correct, replace the spacer (item 105) with a thinner spacer to increase torque, or a thicker spacer to decrease it.
d. If weight bushes are being replaced, dip the new bushes in engine oil then press the bushes (item 82) into the weights (item 84).

NOTE: Bushes do not require reaming after installing.

e. Position the weights (item 84) on the weight shaft spider (item 81) and install shims (item 83) as shown in fig. 130. Check for a clearance of 0.025 – 0.152 mm (0.001 – 0.006 in.) between the

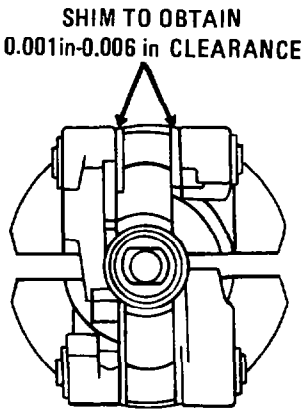


Fig. 130 — Positioning Shims

weight and spider assemblies. If necessary replace the shims with thicker or thinner ones to obtain the correct clearance.

f. Secure the weights (item 84) to the spider (item 81) by pressing the weight pin (item 85) into position.

NOTE: Position the weight pin (item 85) so that the centre lubricating groove is directly in line with the weight shaft spider lubricating hole (see fig. 131).

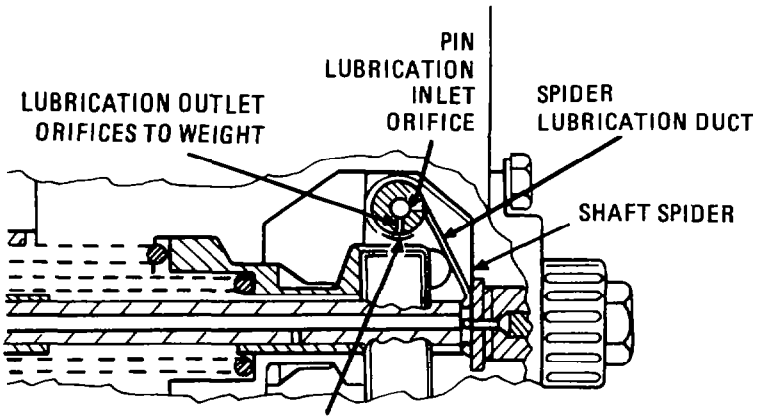


Fig. 131 — Positioning Weight Pin Lubricating Groove

g. Position the bearing retaining plate (item 88) on the weight shaft (item 81) then press the bearing (item 89) onto the weight shaft (item 81).

h. Position the bearing bridge (item 90) over the bearing (item 89). Secure the bearing bridge (item 90) to the bearing retainer (item 88) with bolt (item 86) and Palnut (item 87).

NOTE: Tighten the Palnut finger tight, then tighten a further ¼ to ½ a turn for security.

i. Install the weight lubricating plunger (item 98) and spring (item 97), then assemble the oil slinger (item 93) and driven gear (item 94) onto the shaft (item 81). Secure the gear with the lockwasher (item 95) and hexnut (item 96). Bend the lockwasher against the sides of the hexnut.

j. If the operating shaft bushes (item 30) have been removed, press new bushes into the housing with service tool TSE 7935, and press new oil seal in with service tool TSE 7938.

NOTE: Soak the oil seal in engine oil, then coat the outside diameters of the seal, bushes and plug with Loctite Primer "T" and Loctite 277 prior to assembling.

k. Position the spacers (item 73) on the inner protruding areas of the operating shaft bushes (item 30). Select a spacer to obtain a dimension from flush to 0.50 mm (0.020 in.) below the end of the bushes. Apply a film of grease (XG 274) to the spacers to hold them in position during assembly.

l. Assemble the fulcrum lever (item 53) into the governor housing (item 32) with the control rack link (item 62) facing towards the front open end of the cover. Carefully align the operating lever (item 18) through the housing bush (item 30) and engage one side of the fulcrum lever bracket (item 56).

m. Install the hub (item 71) and spring (Item 72) to the fulcrum lever bracket (item 56). Ensure that the spring ends firmly straddle the lower bracket bar and tang of the hub (item 71). Slide the operating lever into place and secure the hub and spring with the tapered set screw (item 19).

NOTE: Apply Loctite to the set screw before installing.

n. Position the thrust sleeve (item 79) to the fulcrum lever (item 53), engaging the pivot pins (item 54) with the vertical grooves in the sleeve.

NOTE: Assemble the sleeve with the "TOP" marking upward — square corners down.

o. The internal mechanism consisting of the weight shaft assembly (item 81) should be placed through the thrust sleeve (item 79). Locate the bearing bridge on the dowel pins (item 33) and secure.

NOTE: The cut-away portion of the bearing bridge (item 90) must face downward for proper clearance with the drive gear.

p. Install a new gasket on the governor mounting surface, then fasten the governor to the injection pump, engaging the pin (item 64) into the control rack of the injection pump. Check that the pin (item 64) is properly engaged with the control rack.

q. Install the inner governor spring (item 77), shims (item 75) and spring seat (item 74). Place a spring gap gauge TSE 7998 over the spring compartment and check that the spring gap is between 3.75 to 4.00 mm (0.148 to 0.157 in.) see fig. 132. If the gap is not correct, replace the shims with thicker or thinner shims to obtain the correct gap.

NOTE: The idle and full load adjusting screws (item 23 and 25) must be released when setting or checking the governor springs.

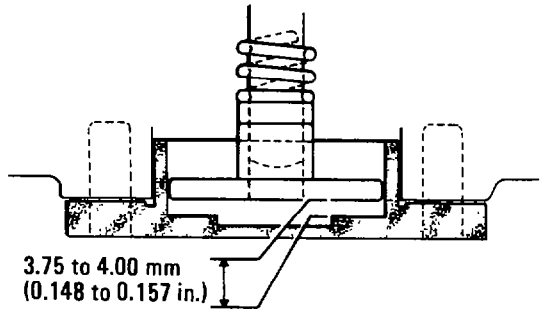


Fig. 132 — Checking Governor Inner Spring Clearance

r. Remove the gap gauge and install the outer spring (item 78) and shims (item 76). Install the gap gauge and check that the gap between the flange surface of the gauge and the governor housing is between zero and 0.50 mm (zero to 0.020 in.) see fig. 133. Replace the shims with thicker or thinner shims as necessary to obtain the correct dimension.

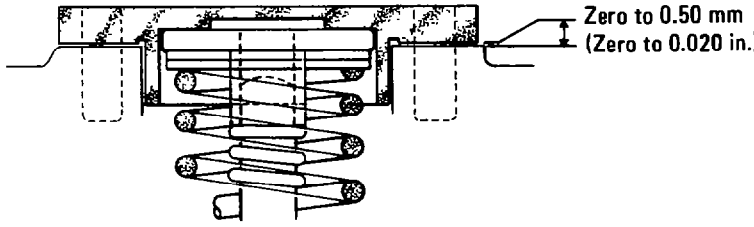


Fig. 133 — Checking Governor Outer Spring Clearance

s. Having determined the spring gaps, assemble and secure the end cap (item 4) and O-ring gasket (item 3) with bolts (items 1 and 2).

NOTE: Bolts with holes drilled through the hex. head are lockwire bolts and must be assembled to the top.

t. For the adjustment of the governor refer to "Calibration Procedure" para. 38.

48 Fuel Injection Pump Modifications

NOTE: 1. A number of fuel injection pumps have governors fitted with low regulation fulcrum levers. When a "resonant ride" or "hunting" condition is reported, check the pump part number. If the pump number is an APE 6BB 6956 (GVB "C" & "E" Governors) then the governor contains a low regulation fulcrum lever; this must be changed for a standard regulation fulcrum lever as follows:
LE 79301 A — low regulation;
LE 79292 A — standard regulation (see fig. 134).

2. Check the torsion spring for play. Remove any play by bending the spring tangs against the torsion spring plate tangs and the low fulcrum lever bracket.

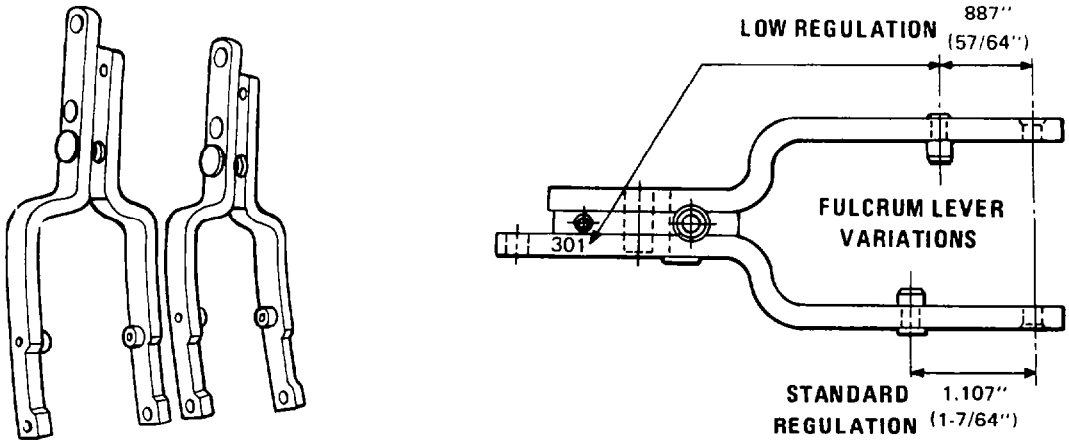


Fig. 134 — Fulcrum Lever Variations

a. Remove the GE 7992 A friction clutch assembly from the camshaft using puller TSE 7920 (refer to para. 30h.).
b. Install a rubber drive assembly (GE 79100 A) on the camshaft. Torque the securing nuts to 54 – 60 Nm (40 – 45 lb.ft).
c. Stamp the letter "M" on the governor nameplate as indicated in fig. 135.

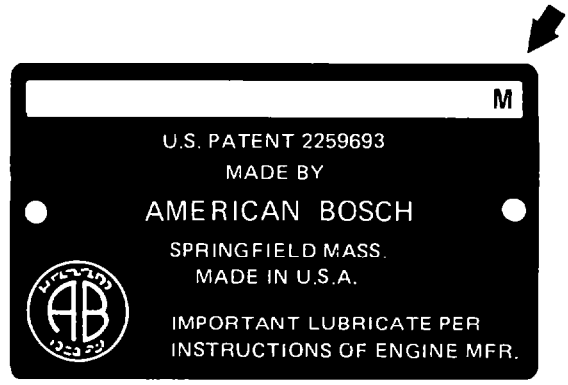


Fig. 135 — Lettering Governor Nameplate

d. Assemble the appropriate governor mounting gasket to the governor housing.
e. Make the necessary adjustments to the governor to obtain the specified fuel deliveries (segment adjustments should not be necessary for this operation).

49 Standard Regulation Governors (On-Engine Repair)

a. Thoroughly clean the pump.
b. Disconnect the throttle linkage and shut off the cable. Check for both excessive wear and play.
c. Remove the governor housing screws and lockwashers, then carefully disengage the governor control rack link from the pump control rack.

NOTE: Measure the thickness of the governor housing gasket (GA 79161 will be approximately 0.762 mm (0.030 in.) thick, GA 79163 will be approximately 1.524 mm (0.060 in.) thick), then discard the gasket.

d. Remove the GE 7992 A friction clutch assembly utilizing puller TSE 7920.
e. Install a GE 79100 A rubber drive assembly. Torque the securing nut to 54 – 60 Nm (40 – 45 lb.ft).
f. Stamp the letter "M" on the governor nameplate as indicated in fig. 135.
g. Assemble the appropriate governor gasket to the governor housing. (A gasket of the same thickness as the discarded governor gasket is required in order to maintain the "as received" fuel deliveries.)

> *CAUTION:*
> *Carefully engage the control rod link pin to the pump control rack. Tighten the governor screws to a torque of 11.3 – 12.4 Nm (100 – 110 lb.in.). Check the stop lever operation to ensure that the control rod link pin is connected to the pump control rack.*

h. Install the required tamper-proof seals.
i. Reconnect the throttle linkage and shut off cable.
j. Check the high and low idle settings the road test the truck.

## TURBOCHARGER

50 Disassembly (see Fig. 136)

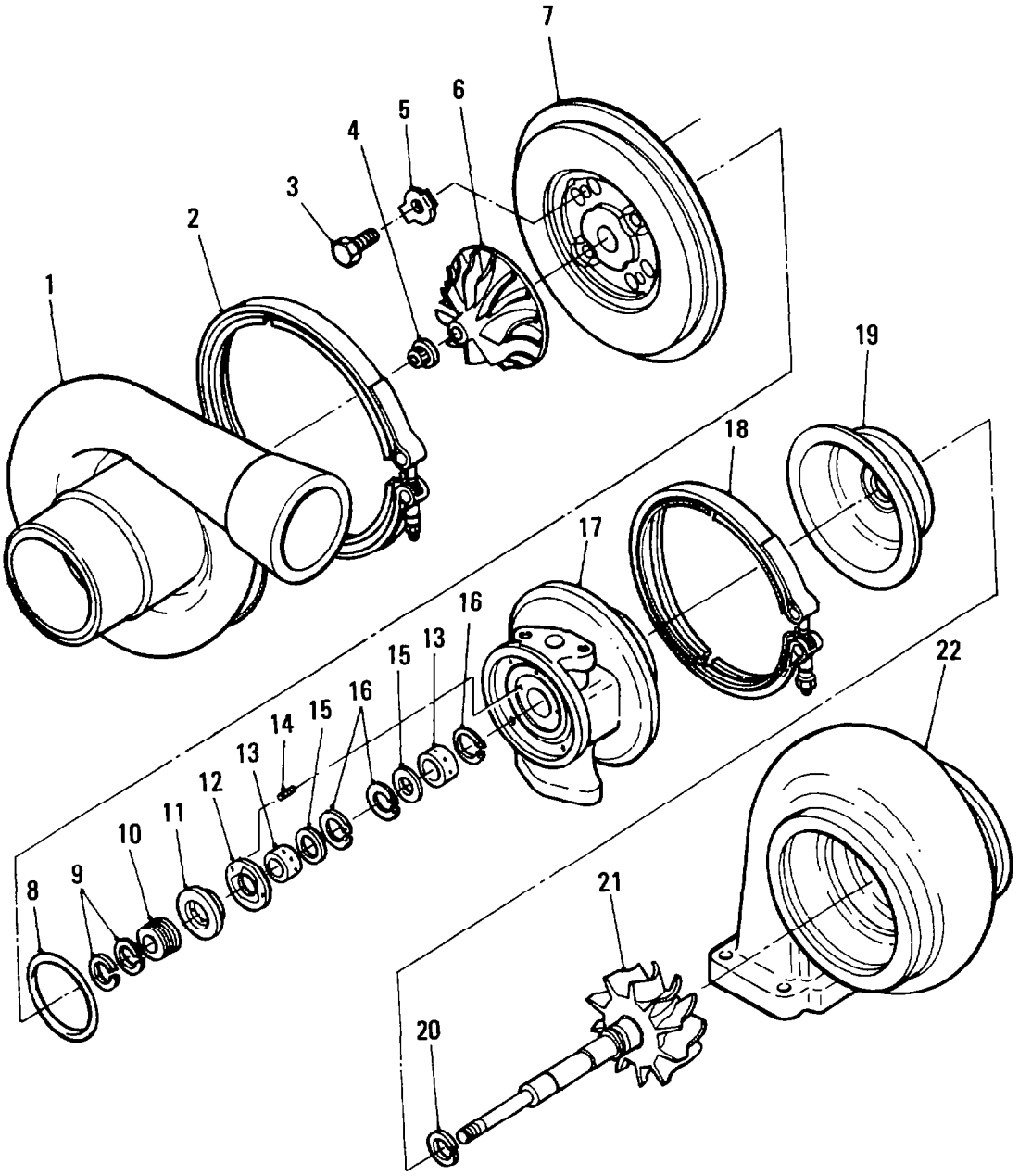


Fig. 136 — Turbocharger Assembly — Exploded View

a. Use recommended cleaning agents (refer to Table 5) to clean the exterior of the turbocharger, then blow-dry using compressed air.

b. Remove the locknut from the V-band coupling (item 2); remove the V-band from the turbocharger, then remove the compressor housing (item 1) from the back-plate (item 7). If necessary loosen the compressor housing by tapping it with a nylon mallet. Repeat the procedure to remove the turbine housing (item 22) from the centre housing (item 17).

c. Support the centre housing (item 17) and rotating assembly in wheel holding fixture J-29677-1 (see fig. 137).

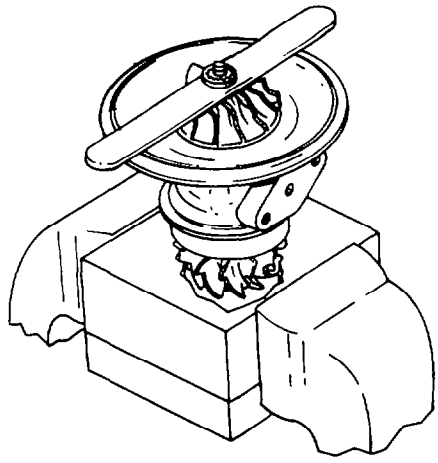

Fig. 137 — Turbine Wheel Holding Fixture

NOTE: The turbine wheel (item 21) and wheel shroud (item 19) may be free to fall when the compressor wheel is removed.

d. Use spanner J-29678-2 to remove the locknut (item 4) securing the compressor wheel to the shaft; if possible, remove the compressor wheel by hand.

NOTE: If it is not possible to remove the turbine wheel by hand, use a suitable arbor press to remove the wheel. If a hydraulic press is used instead of an arbor press, ensure that the ram does not contact the wheel under any circumstances.

e. Place the centre housing assembly (item 17) in the disassembly tool J-29680, align the assembly in the press, then operate the press to remove the compressor wheel (see fig. 138). Catch the turbine wheel (item 21) and shroud (item 19) as it drops from the assembly.

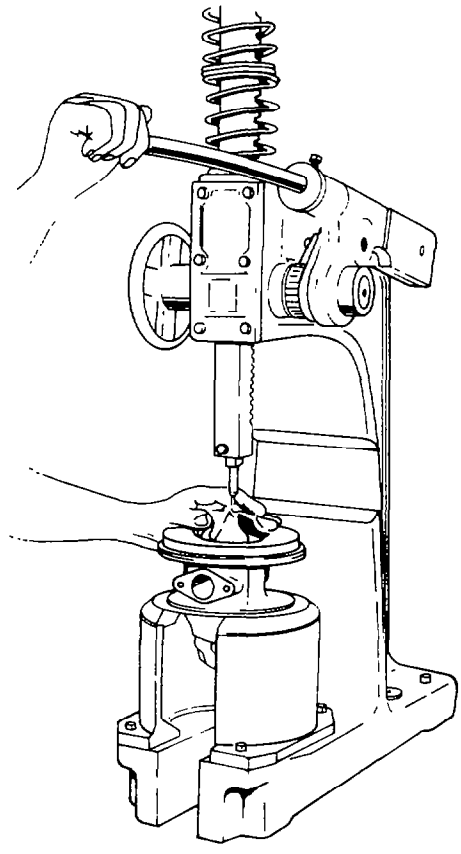

Fig. 138 — Removing Turbine Wheel

NOTE: The piston ring (item 20) for the turbine wheel might catch in the bore of the turbine wheel shroud. Do not use force to free the ring to avoid damaging components.

f. Guide the ring through the bore in the shroud working it gently from side to side until clear, then remove the piston ring from the turbine wheel assembly.

g. Remove the bolts securing the backplate (item 7) to the centre housing (see fig. 139); tap the backplate with a nylon mallet to separate if from the centre housing.

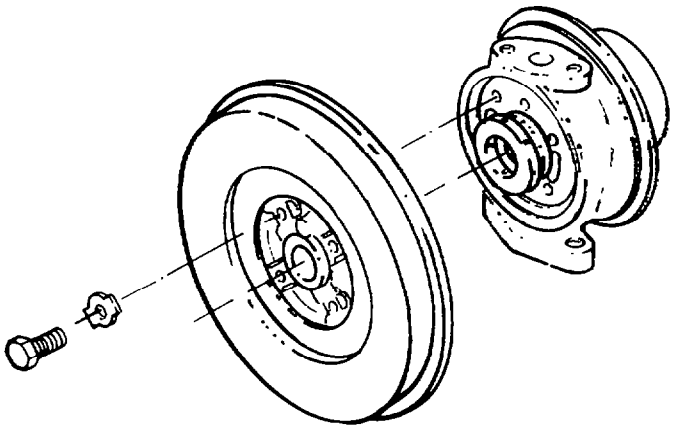

Fig. 139 — Removing Backplate

h. Remove the thrust spacer (item 10) from the bore of the backplate (see fig. 140). Remove the piston rings (item 9).

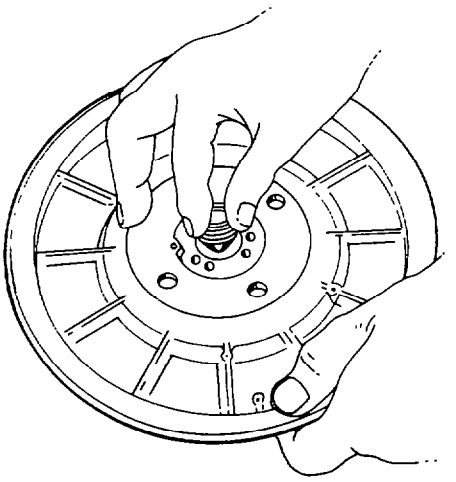

Fig. 140 — Remove Thrust Spacer

i. Remove the square-cut O-ring (item 8) from the centre housing (see fig. 141): remove the thrust collar (item 11) and the inboard thrust bearing (item 12) from the centre housing.

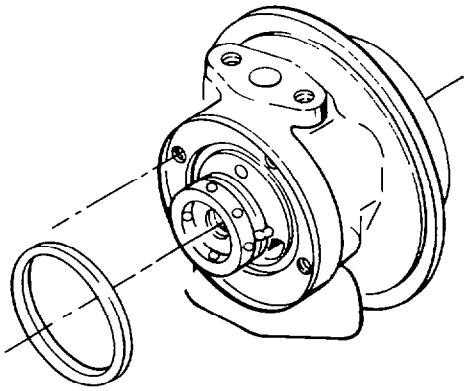

Fig. 141 — Removing O-Ring

j. Working from the compressor end of the centre housing, remove the compressor end journal bearing (item 13), wear washer (item 15) and inboard retaining circlip (item 16).
k. Continue working from the compressor end of the centre housing and remove the turbine end inboard retaining circlip (item 16), wear washer (item 15), journal bearing (item 13) and outboard circlip (item 16).
l. Use a set of pliers to pull the spring pins (item 14) from the centre housing.

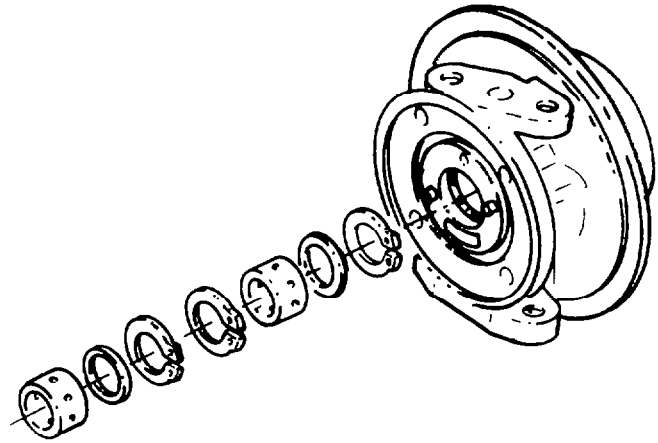

Fig. 142 — Removing Internal Components



## Turbocharger Cleaning

51 The parts of a turbocharger subject to cleaning and re-use are made of cast iron, steel, or aluminium alloys. This section explains the recommended ways of removing varying degrees of dirt accumulation from the different materials used within a turbocharger.

> *WARNING:*
> *Many cleaning agents are toxic or otherwise hazardous. In all cases, follow the manufacturers' warnings and recommendations as to the use, storage, and disposal of these products.*

> *CAUTION:*
> *Follow cleaning instructions carefully, especially temperature and time specifications Too-hot or too-long exposure can cause invisible damage and eventual part failure.*

Table 5 lists the cleaning solutions referred to in the text, along with a description of their function and the manufacturer's name and address. If substitutions are made, be sure that the substitute solution is of the same or better quality than the recommended solution listed in Table 5.

52 Cast Iron and Steel — Light Accumulation of Dirt
a. Immerse parts in Turco Transpo solution mixed according to the manufacturer's recommendation. Maintain at room temperature for 2 to 4 hours.
b. Remove parts and drain. Rinse thoroughly in clean water and drain.
c. Immerse parts in Turco 4338-C solution mixed according to the manufacturer's recommendation. Maintain at 80° to 90°C (180° to 200°F) for 2 to 4 hours.
d. Remove parts and drain. Rinse thoroughly in clean water for at least 10 minutes and drain.
e. Immerse parts in Turco Type C solution for 2 to 4 hours.
f. Remove parts and drain. Rinse thoroughly in clean water for at least 10 minutes and then pressure rinse.
g. Immerse parts in Turco W.O. #2 solution mixed according to the manufacturer's recommendation. Maintain at room temperature for 15 to 20 minutes.
h. Remove parts and drain. Rinse thoroughly in clean water and drain.
i. Immerse parts in Turcoat 4333 for 10 to 15 minutes.
j. Remove parts and drain. Rinse thoroughly in clean water.
k. Immerse parts in water-displacing fluid (PX112) for 5 minutes.

53 Cast Iron and Steel — Medium Accumulation of Dirt

NOTE: Centre housing should not be cleaned by this method, as debris trapped in the oil passages will not be removed.

a. Except Turbine Wheel Assemblies:
   1. Vapor degrease parts with perchlorethylene solvent.
   2. Glass bead, sandblast, or wire-brush parts, depending on degree of dirt accumulation.
   3. Immerse parts in Turco W.O. #2 solution for 15 to 20 minutes.
   4. Remove parts and drain. Rinse thoroughly in clean water and drain.
   5. Immerse parts in Turcoat 4333 solution for 10 to 15 minutes.
   6. Remove parts and drain, Rinse thoroughly in clean water.
   7. Immerse parts in water-displacing fluid (PX112) for 5 minutes.

b. Turbine Wheel Assemblies:
   1. Vapor degrease parts in perchlorethylene solvent.
   2. Protect the shaft with masking tape (see fig. 143).
   3. Glass bead or sandblast the turbine wheel blades.
   4. Wire-brush the hub area only of the turbine wheel assembly. Do not wire-brush bearing journal surfaces.

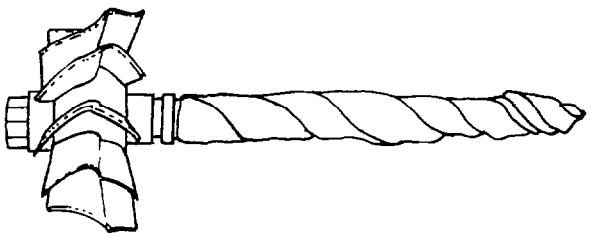

Fig. 143 — Masking Turbine Wheel Shaft

54 Cast Iron and Steel — Heavy Accumulation of Dirt

NOTE: This procedure requires the preparation and maintenance of a sodium hydride salt bath. Sodium hydride (NaH), an active descaling agent, is maintained at the recommended concentration by reducing metallic sodium and hydrogen in a generator mounted on the inner wall of the tank and partially immersed in the bath.

a. The bath starts with approximately 4 500 kg (10 000 lb) of molten sodium hydroxide (NaOH) at 360° to 410°C (680° to 775°F).
b. To produce sodium hydride, slowly add one 2.3 kg (5 lb) brick of metallic sodium to the generator every 5 minutes for approximately 30 minutes. At this time, introduce hydrogen into the generator at the rate of 283 to 340 litres (10 to 12 cubic feet) per hour per ½ kg (1 lb) of metallic sodium added. While hydrogen is being added, continue to add sodium every 15 minutes to obtain the 1.7 percent sodium hydride concentration necessary for descaling.
c. Remove the parts from the bath and drain. Rinse thoroughly in clean water for 15 to 20 minutes and drain.
d. Immerse parts in muriatic acid. Remove and drain.
e. Immerse parts in Turco W.O. #2 solution for 15 to 20 minutes.
f. Remove parts and rinse throroughly in clean water for at least 10 minutes.
g. Immerse parts in Turcoat 4333 for 10 to 15 minutes.
h. Remove parts and drain. Rinse thoroughly in clean water for at least 10 minutes.
i. Repeat steps b. through c. as necessary to completely clean parts.

55 Aluminium — Any Dirt Accumulation

a. Load the parts into a basket so that no air pockets will be created when the parts are immersed and to minimize drag-out of solution when parts are removed.
b. Immerse parts in full-strength Turco Transpo solution. Maintain at room temperature for 3 to 4 hours, depending on degree of dirt accumulation.

NOTE: If a partial drum of Turco Transpo is used, mix thoroughly before pouring to prevent stratification of liquid.

c. Remove the parts and quickly drain. Immediately rinse thoroughly in air-agitated water for at least 10 minutes and drain.
d. Immerse the parts in air-agitated Turco Aviation Cleaner solution. Maintain at 75° to 80°C (170° to 180°F) for 1 hour.

e. Remove the parts and quickly drain. Immediately rinse thoroughly in air-agitated water for at least 10 minutes.
f. Immerse the parts in air agitated Turco Smut-go solution for 5 to 10 minutes.
g. Remove the parts and quickly drain. Immediately rinse thoroughly in air-agitated water for at least 5 minutes.
h. Remove the remaining contaminants in the spray booth with air and water pressure rinse. Repeat steps a. through g. if necessary.

**Table 5. Cleaning Materials**

| Material | Usage | Source |
|---|---|---|
| Turco Transpo | Cleaning cast iron | Commercially available Turco (Aust.) Pty. Ltd. |
| Turco Liquid Smut-Go | Accumulations of smut on aluminum | Commercially available |
| Turco Aviation Cleaner | Stubborn soils on aluminum | Commercially available |
| Turco W.O. #2 | Rust remover | Commercially available |
| Turco type C Alkaline Cleaner | Acid neutralization | Commercially available |
| Turcoat 4338-C Cleaner | Oxide removal from ferrous and high temperature alloys | Commercially available |
| Turcoat 4333 | Zinc phosphate coat | Commercially available |
| Sodum hydroxide (Flake or granular) | Molten salt bath descaling ingredient | Commercially available |
| Metallic sodium (2.3 kg [5 lb] bricks) | Molten salt bath descaling ingredient | Commercially available |
| Hydrogen or dissociated ammonia | Molten salt bath descaling ingredient | Commercially available |
| Muriatic acid | Salt bath neutralization | Commercially available |
| Perchlorethylene | Degreasing | Commercially available |

## Detail Parts Inspection

56 Check all dimensions listed in the Service Limits Table, Table 8, and examine each part in detail according to the general guidelines following.

Compressor Housing

57 Check the compressor housing for:
a. Damage from wheel-to-housing rub or foreign object intake.
b. Nicks, dents, or warpage on the V-band coupling flange.
c. Worn, stripped, or crossed threads or corrosion in tapped holes.
d. Nicks, dents, or warpage of the counterbore that mates with the backplate assembly.
e. Nicks, dents, or other damage to O-ring groove, if applicable.

Compressor Wheel

58 Fluorescent penetrant inspection of the compressor wheel is recommended. Check the wheel for:

a. Cracks (ignore minor pitting).
b. Blade damage from wheel-to-housing contact.
c. Blade tip erosion, feather-edging, or tears.
d. Blade damage from foreign objects.

Also check the balance of the compressor wheel. Refer to Table 6 and fig. 144 for balance by removing stock with a grinder. Refer to Table 6 and fig. 144 for stock removal limits. Clean up burrs around the area of stock removal before measuring the balance each time. After completion of the balancing operation, repeat the fluorescent penetrant inspection.

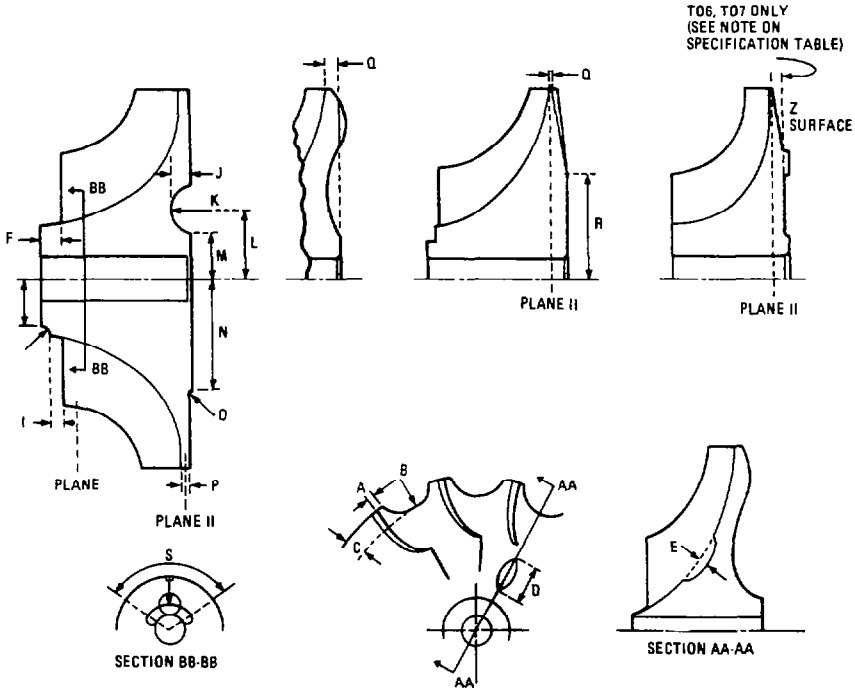


Fig. 144 — Compressor Wheel Balance Planes and Stock Removal Limits

**Table 6. Compressor Wheel Balance Specifications and Stock Removal Limits (Use with Fig. 144)**

| | Turbocharger Model TV77 g.mm | g.in. |
|---|---|---|
| Maximum imbalance in either Plane I or Plane II | 0.61 | 0.24 |
| | **mm** | **in.** |
| A. Minimum | 0.25 | 0.010 |
| B. Maximum radius ① | 8.13 | 0.320 |
| C. Maximum | 5.08 | 0.200 |
| F. Minimum | 8.89 | 0.350 |
| G. Minimum radius | 1.52 | 0.060 |
| H. Minimum | 0.38 | 0.015 |
| M. Minimum | 6.35 | 0.250 |
| N. Maximum radius | 12.70 | 0.500 |
| O. Minimum | 0.64 | 0.025 |
| R. Maximum | 360° | 360° |
| S. Minimum diameter (cutter) | 5.33 | 0.210 |

① Limited to half the number of channels.

Turbine Wheel Assembly

59 Fluorescent penetrant inspection of the assembly is recommended. Check the turbine wheel assembly for:

a. Cracks (ignore minor pitting).
b. Blade damage from wheel-to-housing contact.
c. Blade damage from foreign objects.
d. Blade tip erosion, feather-edging, or tears.
e. Excessive or step wear of the piston ring groove.
f. Bearing journal out-of-roundness.
g. Nicked, worn, stripped or crossed threads.

Check the turbine wheel assembly using the method shown in fig. 145. The shaft must be straight within 0.013 mm (0.005 in.), if it is not and cannot be straightened, it MUST be replaced! Also check the balance of the turbine wheel assembly. Refer to Table 7 and fig. 146 for balance specifications. If necessary, correct the assembly's balance by removing stock with a grinder. Refer to Table 7 and fig. 146 for stock removal limits. Clean up burrs around the area of stock removal before measuring the balance each time. After completion of the balancing operation, repeat thefluorescent penetrant inspection. Apply water-displacing fluid (PX112) to the turbine wheel assembly to protect the shaft from corrosion.

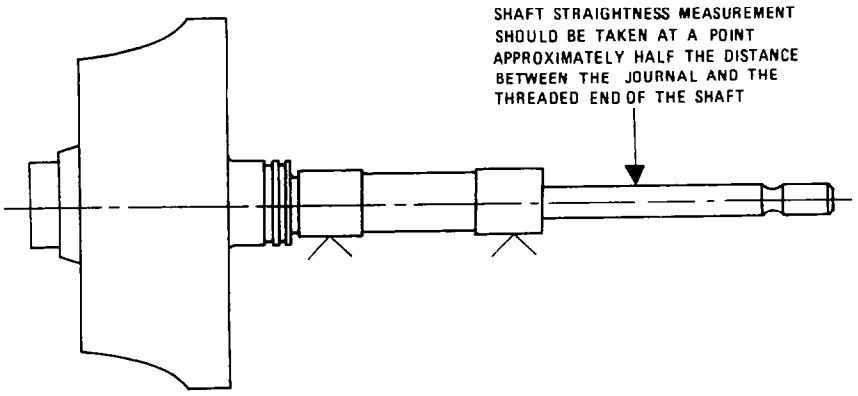


Fig. 145 — Turbine Wheel Assembly

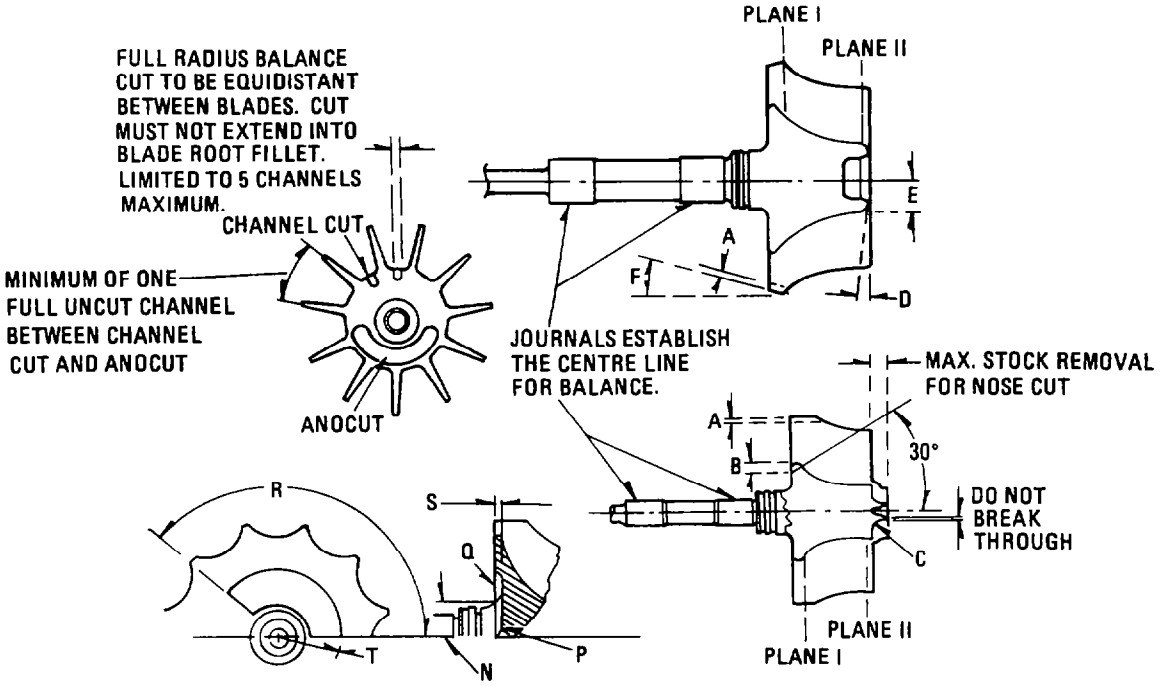


Fig. 146 — Turbine Wheel Assembly Balance Planes and Stock Removal Limits

**Table 7. Turbine Wheel Assembly Balance Specifications and Stock Removal Limits (Use with Fig. 146)**

| | Turbocharger Model TV77 ① ② ③ | |
|---|---|---|
| | g.mm | g.in. |
| Maximum imbalance in either Plane I or Plane II | 0.64 | 0.25 |
| | mm | in. |
| C. Maximum radius | 2.29 | 0.090 |
| N. Maximum | 15.54 | 0.612 |
| P. Maximum radius | 3.99 | 0.157 |
| Q. Minimum radius | 3.99 | 0.157 |
| R. Minimum radius | 360° | 360° |
| T. Maximum radius | 28.17 | 1.109 |

① Break sharp corners generated by stock removal to 0.38 mm (0.015 in.) maximum radius.
② All Plane I surfaces from which balance stock has been removed to be AA130 maximum (normal machine finish).
③ All Plane II surfaces from which balance stock has been removed to be AA250 maximum (milled finish).

Wheel Shroud

60 Check the wheel shroud for:
- a. Damage from contact with the turbine wheel.
- b. Erosion.
- c. Warpage.

Backplate or Thrust Plate Assembly

61 Check the backplate or thrust plate assembly for:
- a. Worn or damaged bore.
- b. Loose or damaged thrust spring.
- c. Loose or damaged thrust bearing; the bearing must be securely attached and be free of cracks, corrosion, and surface damage.
- d. Cracks or warpage of the backplate or thrust plate.

Thrust Collar

62 Check the thrust collar for:
- a. Scratching, scoring, galling, or excessive wear of bearing surfaces.
- b. Excessive or step wear of piston ring groove.

Thrust Spacer

63 Check the thrust spacer, if used, for:
- a. Scratching, scoring, galling, or excessive wear of bearing surfaces.
- b. Excessive or step wear of piston ring groove(s).

Centre Housing

64 Check the centre housing for:
- a. Wear or damage to the bearing bores and seal bores.
- b. Loose or damaged groove pins.
- c. Carbon or sludged oil remaining in oil passages.
- d. Worn, stripped, or crossed threads or corrosion in tipped holes.
- e. Nicks, dents, or warpage of turbine and compressor housing mounting flanges.

Turbine Housing

65 Check the turbine housing for:
- a. Damage from wheel-to-housing contact or foreign object intake.

b. Nicks, dents, or warpage on the V-band coupling flange.
c. Cracks or erosion from excessive exhaust temperature.
d. Worn, stripped, or crossed threads or corrosion in tapped holes, if applicable.

Nozzle or Diffuser

66 Check the nozzle or the diffuser vanes for cracks, erosion, or warpage.

## Repair and Replacement

67 a. Do not re-use any of the following turbocharger parts:

1. Machine bolts.
2. Nuts.
3. Lock plates.
4. Lock washers.
5. Clamps.
6. Gaskets.
7. Seal rings.
8. O-rings.
9. Retaining rings.
10. Thrust bearings.
11. Journal bearings.
12. Wear rings.
13. Shims.
14. Piston rings.

> *CAUTION:*
> *Do not re-use attaching hardware (bolts, nuts, clamps, lock plates, etc.) previously removed from a turbocharger. Use genuine Mack parts only. Attaching hardware must meet stringent requirements; field substitutions may not be reliable.*

b. Clean up the compressor and turbine housing using silicone carbide abrasive cloth. If more than a light clean-up is required, replace the housing.
c. Straighten a bent shaft on the turbine wheel assembly using the method shown in fig. 145. If the shaft cannot be straightened to meet the pertinent specifications shown in para. 59, it *must* be replaced.
d. Correct the balance of the compressor wheel and the turbine wheel assembly, if required. Refer to figs. 144 and 146.
e. Remove broken attaching hardware from the turbine housing.
f. Replace all parts that do not meet requirements outlined under "Detail Parts Inspection".

68 Reassembly

NOTE: 1. If an overhauled or remanufactured centre housing (fig. 136, item 17) is being used for the assembly, ensure that the correct bearings are installed.
2. A remanufactured unit is identified by a nameplate attached to the backplate (item 7) detailing bearing sizes (see fig. 147).

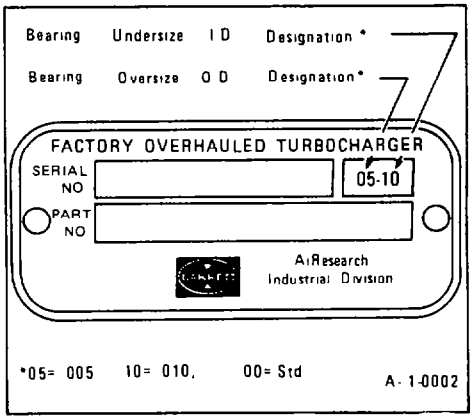


Fig. 147 — Identifying Nameplate

NOTE: 3. On the turbine wheel assembly (item 21) the undersize part has the corresponding numbers etched into the shaft between the journals (see fig. 148).

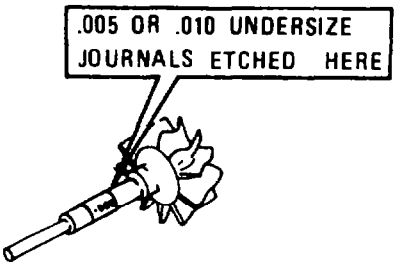


Fig. 148 — Etching Marks — Undersize Journals

NOTE: 4. An oversize centre housing bore is identified by the corresponding number etched into the flange for the oil-feed correction (see fig. 149).

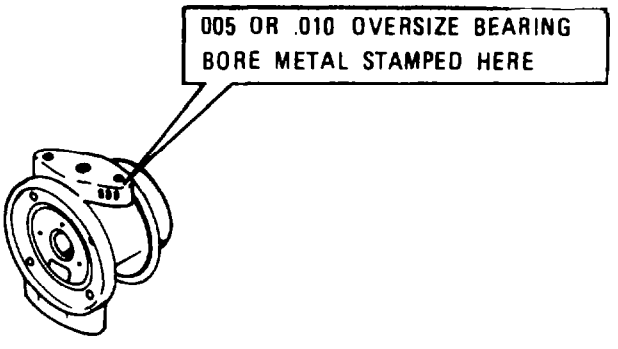


Fig. 149 — Etching Marks — Oversize Bearing

NOTE: 5. In all cases, if the parts are standard size, no numbers are etched into the respective part.

a. Subtract the shaft journal undersize dimension (etched numbers) from the turbine wheel journal service limits shown in Table 8. The result is the minimum acceptable undersize journal diameter. If the actual diameters are less than the specified minimum, the turbine wheel assembly must be replaced.
b. Measure the bearing bore in the centre housing; add the oversize dimension (etched numbers) to the centre housing bore service limits shown in Table 8. The result is the maximum acceptable oversize bore diameter. If the actual diameter is greater than the specified maximum, the centre housing must be replaced.

**Table 8. Service Limits**

| Dimension to be Checked | Service Limits mm | in. |
|---|---|---|
| *Compressor Wheel* | | |
| Bore I.D. | 9.489 – 9.497 | 0.3736 – 0.3739 |
| Wheel balance | See Fig. 144 and Table 6 | |
| *Backplate Assembly* | | |
| Seal bore I.D. | 17.463 – 17.488 | 0.6875 – 0.6885 |
| *Centre Housing* | | |
| Bearing bore dia. | 24.961 – 24.973 | 0.9827 – 0.9832 |
| Turbine end seal bore dia. | 20.88 – 20.93 | 0.822 – 0.824 |

**Table 8 — *cont.***

| Dimension to be Checked | Service Limits mm | in. |
|---|---|---|
| *Turbine Wheel Assembly* | | |
| Bearing journal dia. | 15.875 – 15.885 | 0.6250 – 0.6254 |
| Hub O.D. (adjacent to wheel) | 20.19 – 20.24 | 0.795 – 0.797 |
| Piston ring groove dia. | 17.48 – 17.58 | 0.688 – 0.692 |
| Piston ring groove width | 1.638 – 1.740 | 0.0645 – 0.0685 |
| Wheel balance | See Fig. 146 and Table 7 | |
| *Thrust Spacer* | | |
| Length | 13.11 – 13.13 | 0.516 – 0.517 |
| Bore I.D. | 9.538 – 9.545 | 0.3755 – 0.3758 |
| O.D. | 17.056 – 17.082 | 0.6715 – 0.6725 |
| Piston ring groove dia. | 15.34 – 15.44 | 0.604 – 0.608 |
| Piston ring groove width | 1.740 – 1.765 | 0.0685 – 0.0695 |
| *Thrust Collar* | | |
| Length | 7.59 – 7.62 | 0.299 – 0.300 |
| Bore I.D. | 9.535 – 9.545 | 0.3754 – 0.3758 |
| Large O.D. | 35.56 | 1.400 |
| End surface parallelism | within 0.008 Total indicator reading | within 0.0003 |

c. When the measurements are within the specified limits, select the replacement journal bearings with the appropriate oversize O.D. or undersize I.D.

d. Use a pin punch to install the spring pins (item 14) in the centre housing (item 17).

NOTE: Apply a coat of fresh engine oil (OMD-115) to all internal components before installation in the centre housing.

e. Working from the compressor end of the centre housing (item 17) use Tool J-29672 to install the turbine end outboard circlip (item 16) in the centre housing (see fig. 150).

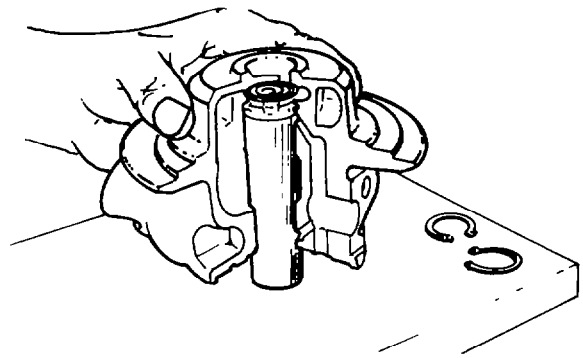

Fig. 150 — Installing Turbine End Outboard Circlip

f. Still working from the compressor end, install the turbine end wear washer (item 15), journal bearing (item 13) and inboard retaining ring (item 16) (see fig. 151).

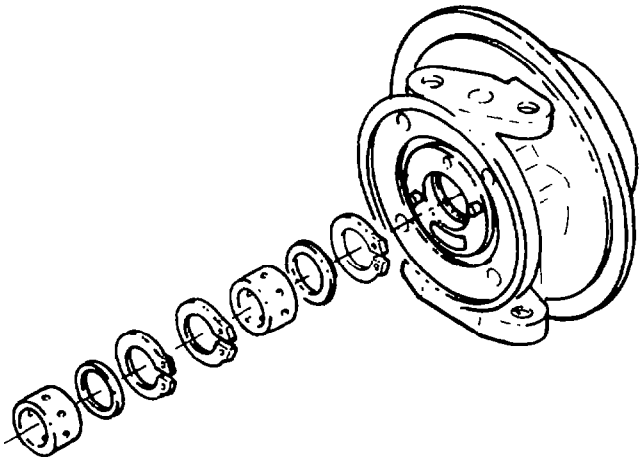

Fig. 151 — Installing Internal Components

g. Install the compressor end inboard circlip (item 16), wear washer (item 15) and journal bearing (item 13). Fit the thrust spacer (item 12) to the centre housing; the holes in the thrust spacer must engage the spring pins (item 14); fit the thrust collar (item 17) to the centre housing (see fig. 152).

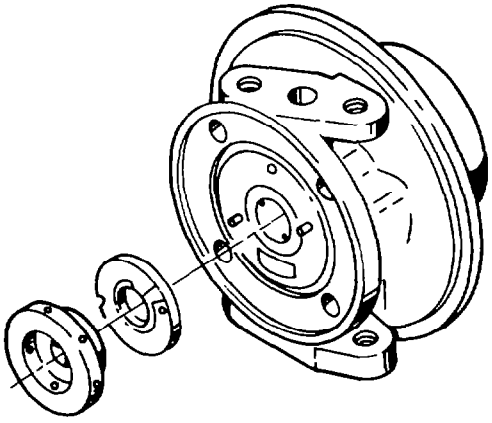

Fig. 152 — Installing Thrust Bearing and Thrust Collar

h. Lubricate the square-cut O-ring with rubber grease then fit the O-ring into the groove in the centre housing (see fig. 153).

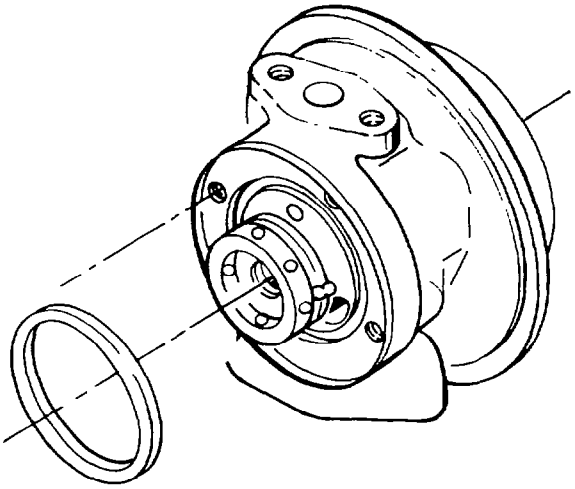

Fig. 153 — Installing O-ring

i. Fit the backplate (item 7) to the centre housing; fit the lockplates (item 5) then install the backplate retaining bolts (item 3). Torque the bolts to between 9.0 Nm and 11.3 Nm (80 lb.in. to 90 lb.in.). Lock the bolts into position by bending the tabs on the lockplates.

j. Fit the wheel shroud (item 19) to the centre housing; fill the piston ring groove in the turbine wheel shaft with high vacuum silicone grease (see fig. 154).

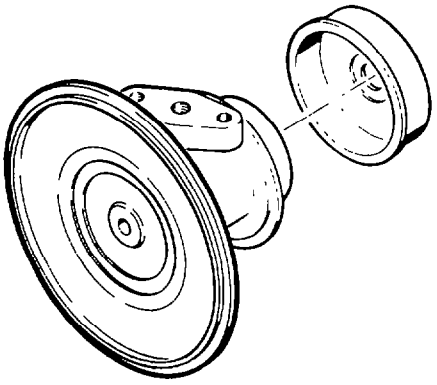

Fig. 154 — Installing Wheel Shroud

k. Use the appropriate sleeve to fit the piston ring (item 9) to the shaft (see fig. 155); ensure that the piston ring is installed in the square bottomed groove and not in the rounded oil slinger groove.

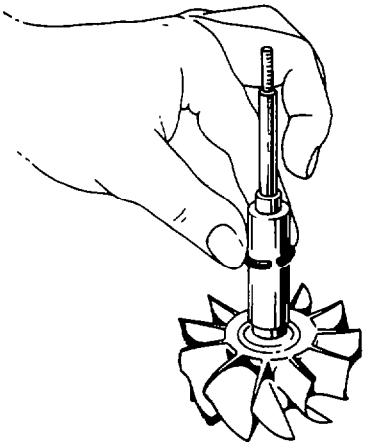

Fig. 155 — Installing Piston Ring

l. Guide the turbine wheel shaft through the shroud and into the centre housing bore; slide the shaft into the housing as far as it will go, keeping the shaft straight to avoid scuffing the bearings.

m. If the piston ring binds in the shroud or housing, do not force the ring; apply a gentle downward pressure on the turbine wheel and at the same time rotate the wheel shroud (see fig. 156); this action will allow the piston ring to seat in the bore.

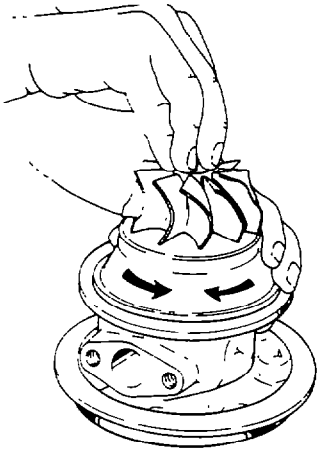

Fig. 156 — Rotating Wheel Shroud

n. Use tool J-29676 to insert the thrust spacer (item 11) into the bore of the backplate (item 7).

o. Place the turbine wheel and centre housing in a suitable holding fixture (see fig. 157); slide the compressor wheel (item 6) onto the turbine wheel shaft as far as it will go then fit the locknut (item 4) to the shaft and tighten it finger-tight.

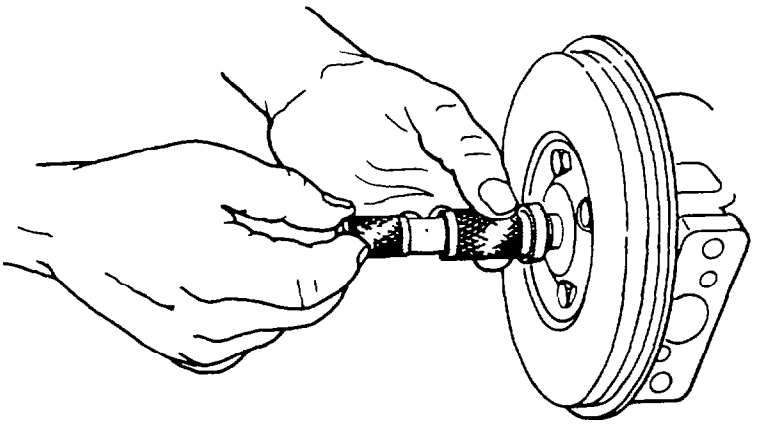

Fig. 157 — Installing Thrust Spacer

NOTE: To avoid imposing bending loads on the shaft when tightening the locknut use two universal joints connected in tandem attached to the torque wrench.

p. Torque the locknut to between 14.1 and 17.0 Nm (125 to 150 lb.in.); loosen the nut then torque it again to between 4.0 and 6.2 Nm (35 and 55 lb.in.).

q. Fit the turbine housing (item 22) to the centre housing (item 17); fit the V-band coupling (item 18) to the turbine housing and tighten the clamp just enough to prevent the housing from contacting the turbine wheel.

r. Fit the compressor housing (item 1) to the centre housing: fit the V-band coupling (item 2) to the compressor housing and tighten the clamp just enough to prevent the housing from contacting the compressor wheel.

s. Fill the centre housing with fresh engine oil (OMD-115) then turn the wheels by hand several times to coat the internal components with oil; drain excess oil from the centre housing.

t. Fit protective covers or plugs to all openings in the turbocharger.

NOTE: If the turbocharger is to be stored indefinitely, wrap it in a heavy duty plastic bag, enclosing several silica-gel moisture absorbing packets with the unit, then close and securely tie the bag.

u. Attach a NOT TORQUED label to each V-band coupling, then place the unit in a sturdy box and submit it for storage.

# GROUP 5 — CLUTCH

## CLUTCH ASSEMBLY OVERHAUL

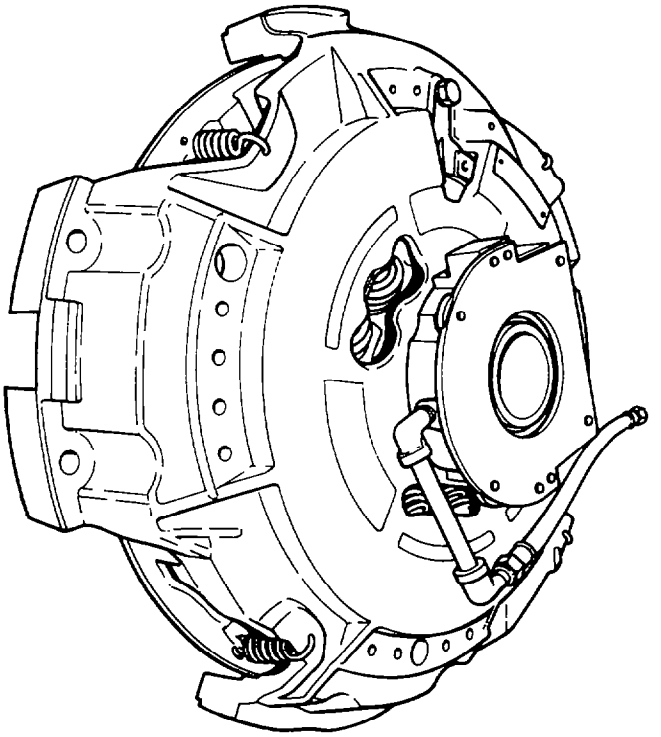

Fig. 158 — Clutch Assembly

69 Disassembly (see fig. 158)

a. Having removed the clutch assembly as detailed in EMEI VEH G 704 — Group 5, remove the rear clutch plate, intermediate plate and front clutch plate from the assembly. Clean all components.

NOTE: The adjusting ring is secured in position by a locking mechanism bolted to the clutch housing (see fig. 159).

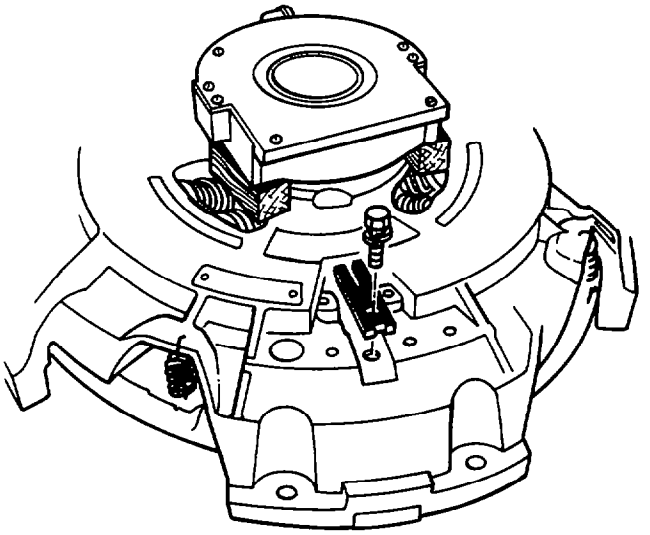

Fig. 159 — Lock-tab Removal

b. Remove the bolt and locking mechanism from the clutch housing; use a screwdriver or similar tool if necessary to pry the unit loose.
c. Invert the assembly so that the pressure plate is uppermost; unhook the return springs from the clutch housing (see fig. 160).

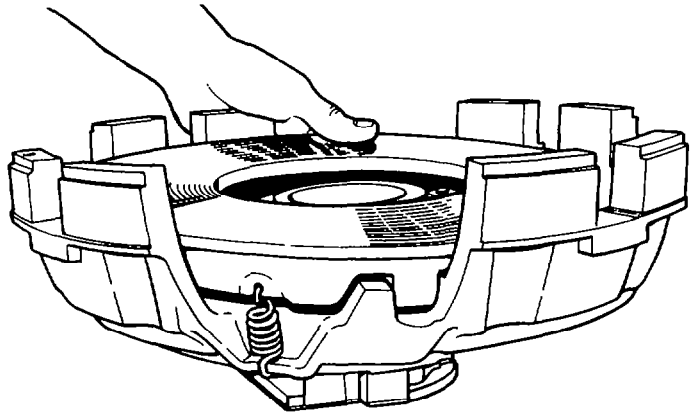

Fig. 160 — Pressure Plate Return Springs

NOTE: Position the release bearing on a piece of tubing with a diameter of approximately 63.50 – 69.85 mm (2.50 – 2.75 in.). Do not support the clutch release bearing on the cover rivet heads.

d. Punch or scribe mark the pressure plate in relation to the clutch housing for reassembly purposes; remove the pressure plate from the housing.
e. Turn the adjusting ring and lever assembly counter-clockwise until free of the housing, (see fig. 161).

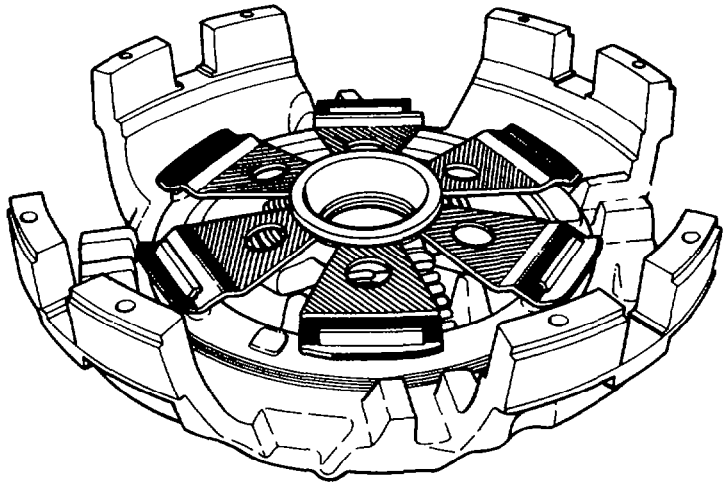

Fig. 161 — Adjusting Ring and Lever Assembly

f. Remove the snap-ring from the release sleeve retainer (see fig. 162).

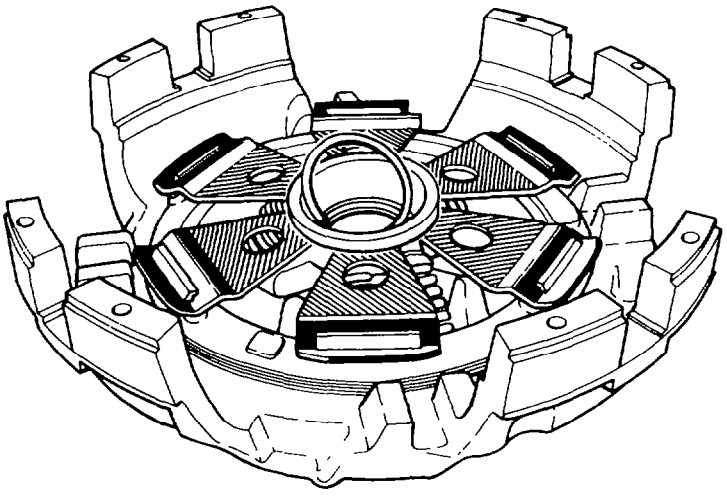

Fig. 162 — Removing Snap-ring

g. Place the assembly in an arbor press with the tubing supporting the carrier sleeve.

NOTE: The spring retainer and springs must be compressed using a specially fabricated tool.

h. Compress the retainer and springs until the drive lugs bottom on the clutch housing then remove the wooden blocks from between the release bearing and clutch housing. Remove the half-ring locking washers (see fig. 163).

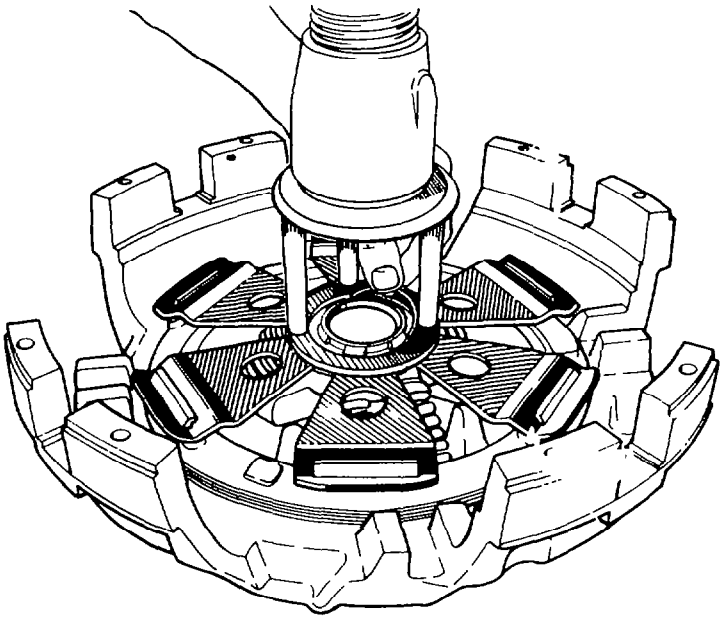

Fig. 163 — Removing Half-ring Locking Washers

i. Gradually release the pressure on the retainer and springs until free then remove the levers and the adjusting ring, the springs and spring pivots and the spring retainer.

j. Clean all components.

**Detail Parts Inspection**

70 Inspect all components paying particular attention to the following points:

a. Heat cracks in the pressure plate.
b. Excessive wear in all drive slots.
c. Broken springs.
d. Dry or damaged release bearing.
e. Cracked intermediate plate.
f. Excessive spline wear in the clutch plate hubs.
g. Burned facings.
h. Excessive wear in the intermediate plate slots.

If the preceeding inspection reveals no major faults, measure the thickness of the rear clutch plate, then using the chart in fig. 164, determine the approximate remaining clutch life, and reinstall or replace the plates accordingly.

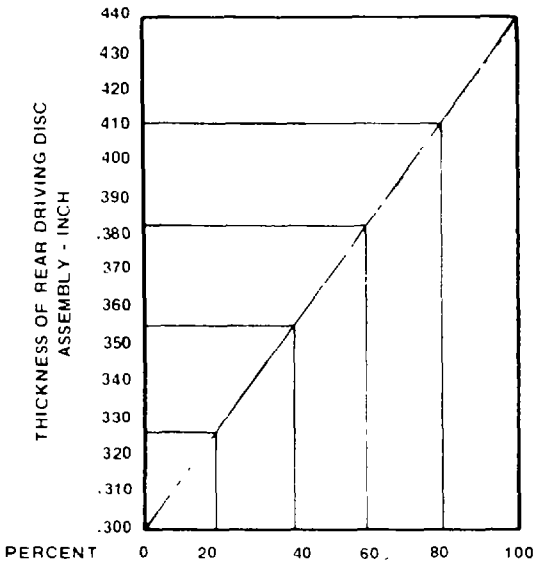


Fig. 164 — Remaining Clutch Life

Clutch Plates

71 Inspect the plates for cracks, loose rivets, worn splines and warping or dishing; replace if beyond limits (refer to Table 9). Replace if the hubs are cracked or if the hub splines are excessively worn. Renew the ceramic buttons if they are glazed, scored, worn down to the rivet heads, burned or if contaminated with grease or oil.

Clutch Housing

72 Replace the clutch housing if it is cracked; check the slots for indentation caused by the force of the driving lugs on the pressure plate (refer to Table 9).

Adjusting Ring

73 Check the adjusting ring for cracks and replace if cracks are evident. Check the pivot lugs on the adjusting ring; if they are excessively worn or damaged in any way, replace the ring.

Pressure and Intermediate Plates

74 Inspect the pressure plate fulcrum for wear. If wear exceeds 0.381 mm (0.015 in.), remachine. Refer to Table 9 for the maximum rework figures. Inspect all friction surfaces for heat checks, scoring or distortion. If any surface is scored, warped or dished in excess of 0.254 mm (0.010 in.) remachine or replace as appropriate. Table 9 details maximum scoring and regrind depths.

Release Levers

75 Inspect the levers for excessive wear at points of contact with the release sleeve retainer, pressure plate and pivot lugs. Replace the levers if they are bent or worn in any way.

NOTE: Replace the clutch release levers during a clutch rebuild.

Release Sleeve Retainer

76 Inspect for wear in the lever groove and internal splines. Check the clearance between the clutch housing drive slots and the driving lugs on the release sleeve retainer. Refer to Table 9 for clearance figures.

Spring Pivots

77 If the spring pivots are cracked or excessively worn, they must be replaced.

Release Bearing and Sleeve Assembly

78 The manufacturer recommends that the release bearing and sleeve assembly are replaced as an exchange unit at the time of the clutch rebuild.

Reassembly

79 Reassemble the clutch assembly as follows:

a. Using a suitable 25 mm paint brush, coat the threads on the adjusting ring and the internal clutch housing threads with DARINA EP-1 (Shell Oil Co.).

b. Fit the spring pivots to the clutch housing and release sleeve retainer, then install the release bearing assembly from the bottom of the unit.

c. Fit the release levers over the pivot lugs on the adjusting ring then fit the unit to the clutch housing so that the levers index in the groove in the retainer.

d. Place the assembly in an arbor press with the tubing supporting the carrier sleeve; fit the springs over the pivots on the release sleeve retainer.

NOTE: Use a short piece of tubing with an O.D. of 63.5 mm or 69.8 mm (2.50 in. or 2.75 in.) to support the release bearing carrier sleeve. DO NOT support it on the carrier rivet heads.

e. Compress the retainer and springs using the special tool until the drive lugs bottom on the clutch housing; install the half-ring locking washers (see fig. 165).

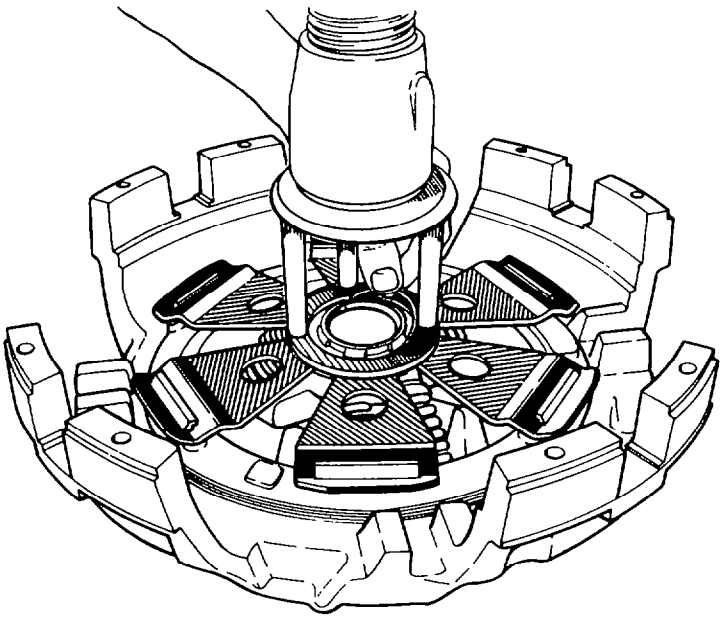

Fig. 165 — Installing Half-ring Locking Washers

f. Remove the assembly from the press then place a straight edge across the mounting bosses diagonally opposite each other; turn the adjusting ring clockwise taking measurements at close intervals, until the specified dimension is reached.

NOTE: The adjusting ring must be pre-set in the housing so that a dimension of approximately 68.32 mm (2.69 in.) is obtained between the levers and mounting boss on the clutch housing (see fig. 166).

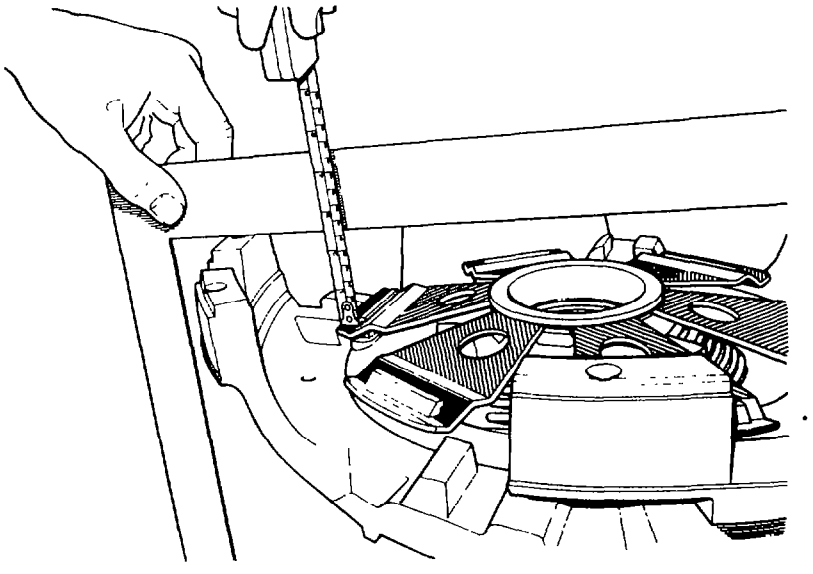

Fig. 166 — Setting Adjusting Ring

g. Install the assembly in the press and support the clutch housing to allow movement of the release bearing sleeve. Apply pressure to the sleeve retainer and install the two 19 mm (0.784 in.) wooden blocks between the release bearing and clutch housing. Remove the assembly from the press.

h. Install the snap-ring (see fig. 167) and locking mechanism for the adjusting ring; install and tighten the securing bolt (see fig. 168).

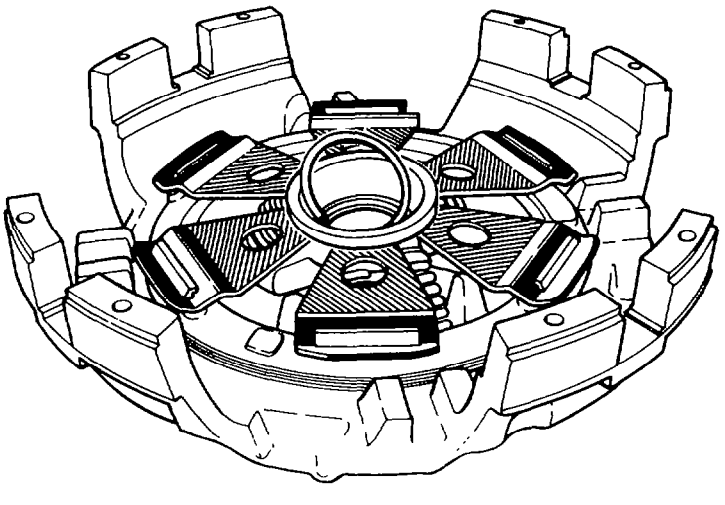

Fig. 167 — Snap-ring Installation

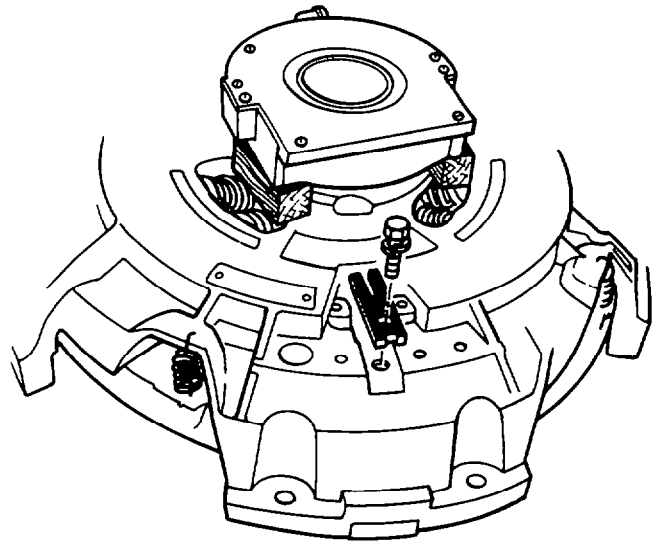

Fig. 168 — Lock Tab Installation

i. Fit the pressure plate into the housing so that the punch or scribe marks are aligned; fit the return springs to the assembly (see fig. 169).

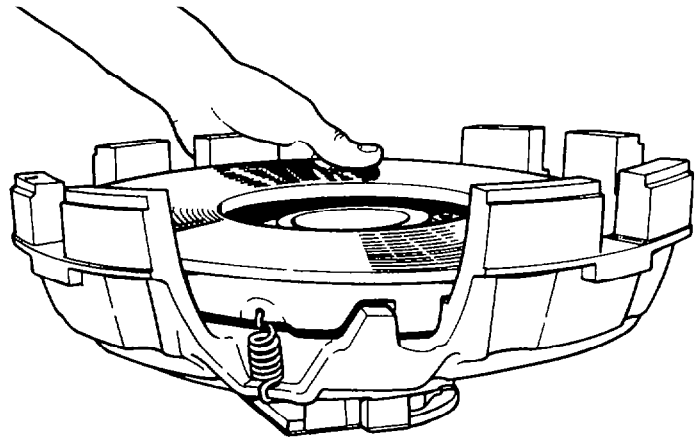

Fig. 169 — Pressure Plate Return Springs

j. Fit the rear clutch plate, intermediate plate and front clutch plate to the assembly.

Installation and Storage

80 Install the clutch assembly in the vehicle as detailed in EMEI VEH G 704 — Group 5. If the clutch assembly is to be stored, insert the assembly into a heavy duty plastic bag, tie the bag securely and return to store.

**Table 9. Specifications Chart**

| Subject | AS-1552 Series 393.7 mm (15.5 in.) Two Plate mm | in. |
|---|---|---|
| Minimum bell housing size for mounting (S.A.E.) | No. 2 | |
| Pilot diameter | 435.76 – 435.69 | 17.156 – 17.153 |
| Bolt circle | 422.28 | 16.625 |
| Flywheel pot depth | Flat | |
| Clutch bell to centreline of release yoke | 112.73 | 4.438 |
| Disc and facing thickness — standard | 12.370 – 11.481 | 0.487 – 0.452 |
| Hub spline size | 44.450 by 10 splines | 1.750 |
| | 50.800 by 10 splines | 2 |
| Disc assembly maximum runout (total indicator runout) | 0.381 | 0.015 |
| Disc assembly maximum out-of-flat | 0.508 | 0.020 |
| Release sleeve bushing diameter (new) | 44.552 – 44.450 | 1.754 – 1.750 |
| | 51.054 – 51.003 | 2.010 – 2.008 |
| Intermediate plates, driving lugs to slot clearance (new minimum) | 0.152 | 0.006 |
| Intermediate plates, driving lugs to slot clearance (maximum worn) | 0.381 – 0.533 | 0.015 – 0.021 |
| Pressure plates, driving lugs to slot clearance (new) | 0.076 – 0.254 | 0.003 – 0.010 |
| Pressure plates, driving lugs to slot clearance (maximum worn) | 0.406 – 0.533 | 0.016 – 0.021 |
| Intermediate plates and pressure plates, out-of-flat | 0.000 – 0.102 | 0.000 – 0.004 |
| | Concave | |
| Scoring — maximum depth that can be re-used | 0.381 | 0.015 |
| Re-grind — maximum removal per side | 0.381 | 0.015 |
| Fulcrum wear (maximum) rework | 0.762 | 0.030 |
| Release sleeve retainer, driving lugs to slot clearance (maximum worn) | 0.508 | 0.020 |

# — FAULT FINDING —

## Clutch

| Symptom | Probable Cause | Action |
|---|---|---|
| 1. Noisy Clutch. | a. Clutch release bearings dry or damaged. | a. Lubricate bearing or replace. |
| | b. Flywheel pilot bearing dry or damaged. | b. Lubricate bearing or replace. |
| | c. Clutch release bearing housing striking flywheel ring. | c. Adjust clutch. Also check wear on cross shafts, bell housing bushings, and release yoke fingers. If badly worn replace parts. |
| 2. Poor Release. | a. Insufficient amount of release travel. | a. Check release travel angle as spring clutches are designed for 12.70 mm (0.50 in.) |
| | b. Pressure plate not retracting. | b. Check pressure plate drive lugs for proper clearance of 0.152 mm (0.006 in.) minimum. Check pressure plate return springs. Replace if bent or stretched. |
| | c. Lever nose out of groove in release sleeve retainer. | c. Remove from vehicle. Repair or replace clutch assembly. |
| | d. Driven disc distorted or warped. | d. Driven disc assembly must be straight within 0.381 mm (0.015 in.) total indicator reading. Replace discs if they can not be straightened. |
| | e. Damage to driven disc can be caused by poor installation methods. Do not force transmission drive gear into disc hubs. This will distort or bend driven disc causing poor release. | e. Replace clutch assembly. |
| | f. Splines worn on main drive gear of transmission. | f. Replace drive gear and check driven disc hubs for excessive wear. If worn, replace disc. Check flywheel housing alignment of engine and transmission. Make sure driven discs slide freely on drive gear splines. |
| | g. Internal clutch adjustment not correct. | g. Readjust clutch for standard release travel. Proper clutch adjustment must be maintained for good clutch release and proper brake squeeze. |

# — FAULT FINDING —

## Clutch cont'd

| Symptom | Probable Cause | Action |
|---|---|---|
| | h. Flywheel pilot bearing fitting too tightly in flywheel or on end of drive gear. | h. Replace pilot bearing. |
| | i. Facings gummed with oil or grease. | i. Replace facings or entire driven disc assembly. Cleaning not recommended. |
| | j. Damaged clutch release bearing. | j. Replace bearing. |
| | k. Clutch release shaft projecting through release yoke. | k. Relocate release shaft so it does not project. Check bell housing bushings and release yoke for wear. Replace if worn. |
| | l. Release yoke contacting cover assembly at full release position. | l. Replace release yoke with proper yoke. |
| | m. Release yoke will not align with release bearing properly. | m. Check flywheel. If resurfaced more than the recommended 1.524 mm (0.060 in.) replace flywheel. |
| | n. Broken intermediate plate caused by driver abuse or excessive heat:<br>1. Holding vehicle on hill with clutch.<br>2. Overload.<br>3. Starting off in the wrong gear.<br>4. Wrong cover assembly installed allowing clutch to slip.<br>5. Intermediate plate hanging allowing clutch to slip. | n. Replace damaged intermediate plate driven disc assembly. |
| 3. Clutch Slippage. | a. Weak pressure springs. | a. Replace springs. |
| | b. No free pedal. | b. Readjust clutch. |
| | c. Worn clutch facings. | c. Replace facings or complete driven disc assembly. |
| | d. Release mechanism binding. | d. Free up mechanism and linkage. Check clutch adjustment. |
| | e. Grease or oil on facings. | e. Replace facings or complete driven disc assembly. |

# GROUP 6 — TRANSMISSION

## TRANSMISSION OVERHAUL

81 Having removed the transmission from the vehicle (refer EMEI VEH G 704 — Group 6) proceed with overhaul as follows:

a. Remove the clutch release shaft and yoke (refer EMEI VEH G 704 — Group 5).
b. Remove the top housing covers.
c. Carefully remove the selector shaft detent ball cover (cover is spring loaded), springs and balls (see fig. 170).

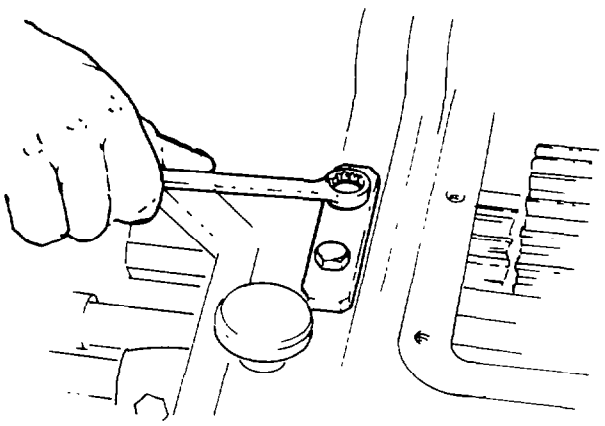

Fig. 170 — Removing Detent Ball Cover

d. Remove the locating screws from the selectors and selector forks, except second and third selector and selector fork.
e. Withdraw the selector shafts from the case, removing the selectors and selector forks as the shafts are withdrawn (see fig. 171).

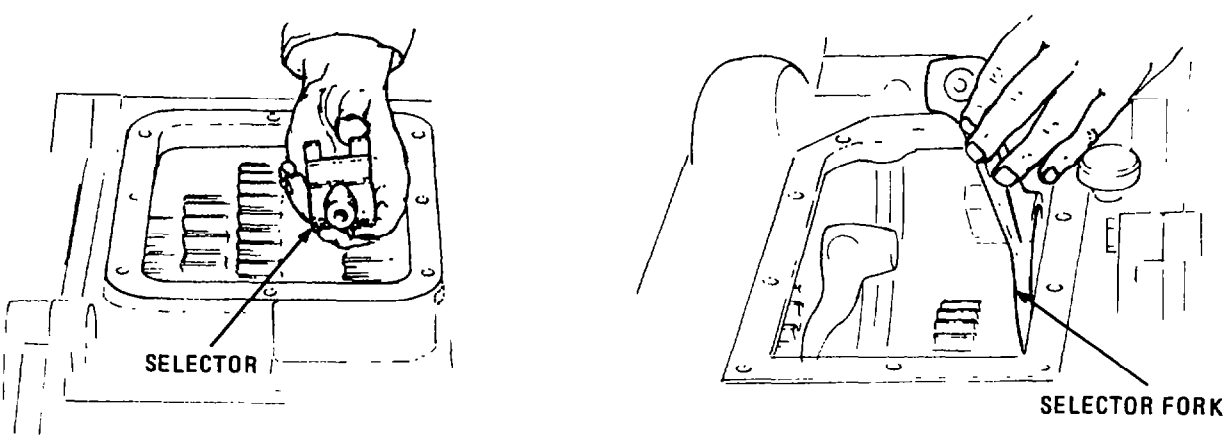


Fig. 171 — Removing Selectors, Selector Forks and Shafts

f. Slide the reverse selector fork front snap ring forward, then slide the selector fork forward, to enable the rear snap ring to be moved rearward. Progressively move the rear snap ring, selector fork and front snap ring rearward while withdrawing the reverse selector shaft forward from the case.

NOTE: It is recommended that the expansion plug at the rear of the second and third selector shaft be removed to withdraw the selector shaft (see fig. 172). This can be accomplished by tapping on the selector to drive the shaft rearward. Then remove the locating screws from the second and third selector and the selector fork and remove the shaft, the selector and the fork from the case.

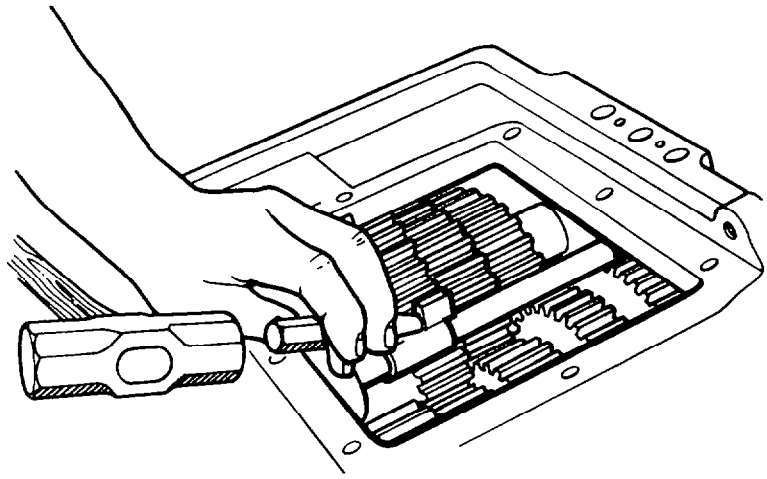

Fig. 172 — Removing Second/Third Selector Shaft Expansion Plug

g. Place the two sliding clutches into the engaged position. This will lock up the mainshaft, making it easier to remove the drive yoke assembly.
h. Remove the drive yoke retaining bolt and clamp plate.
i. Remove the drive yoke from the mainshaft splines using a suitable puller.
j. Remove the mainshaft rear bearing cover.
k. Remove the retaining bolts from the main driving pinion bearing cover and remove the cover (see fig. 173).

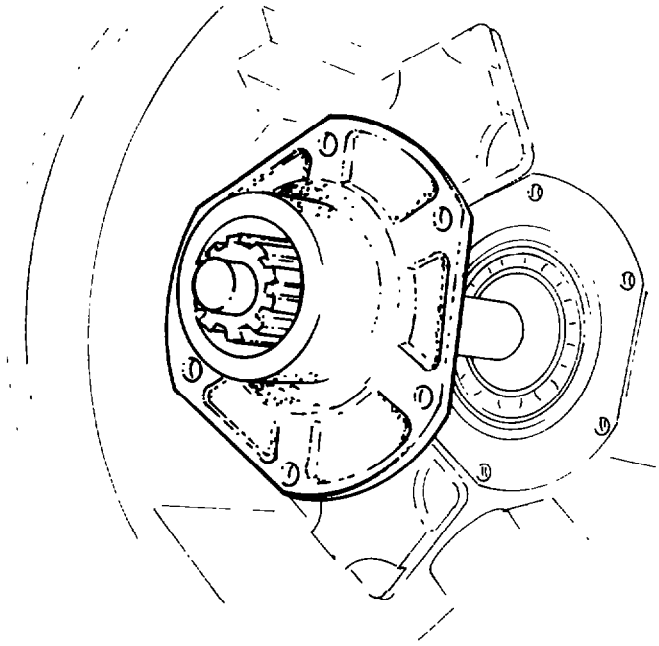

Fig. 173 — Removing Main Driving Pinion Bearing Cover

l. Remove the main driving pinion.

NOTE: It may be necessary to tap on the gear end of the main driving pinion with a nylon hammer to remove the assembly from the case (see fig. 174).

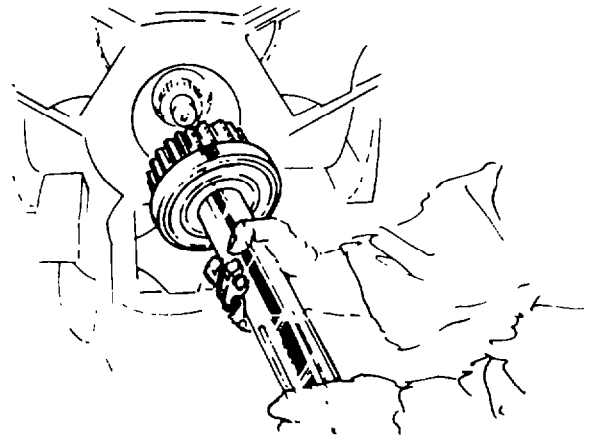

Fig. 174 — Removing Main Driving Pinion

m. Remove the fourth/fifth gear sliding clutch from the mainshaft (see fig. 175).

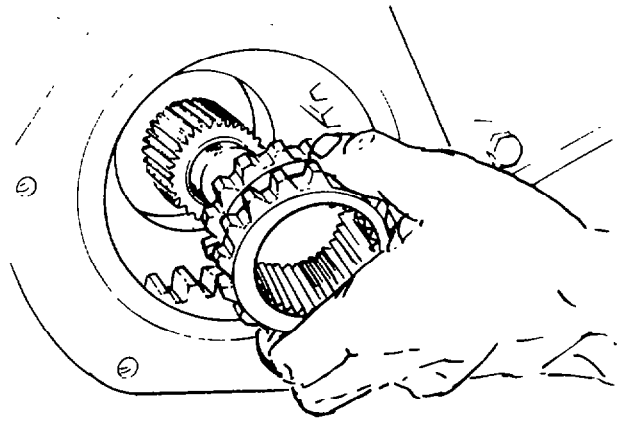

Fig. 175 — Removing Fourth/Fifth Gear Sliding Clutch

n. Remove the fourth gear selective thrust washer retaining snap ring and remove the thrust washer from the mainshaft (see figs. 176 and 177).

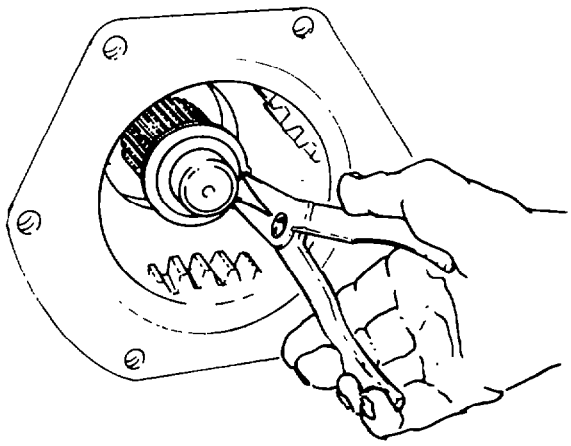

Fig. 176 — Removing Retaining Snap Ring

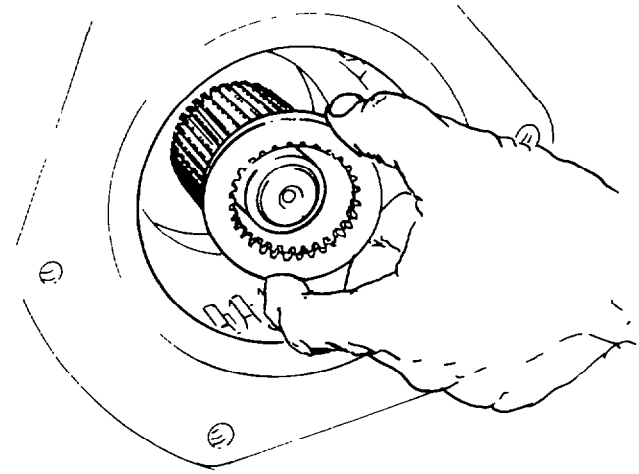

Fig. 177 — Removing Selective Thrust Washer

o. Carefully remove the mainshaft from the case through the rear bearing opening (see fig. 178).

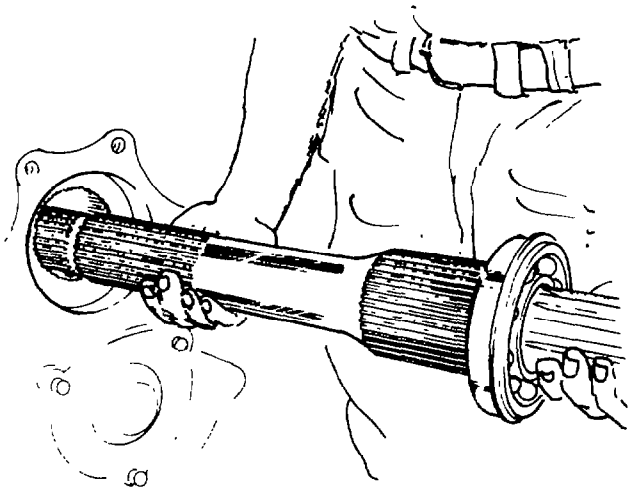

Fig. 178 — Removing Mainshaft

p. Remove the fourth gear and thrust washer through the transmission case top cover opening (see fig. 179).

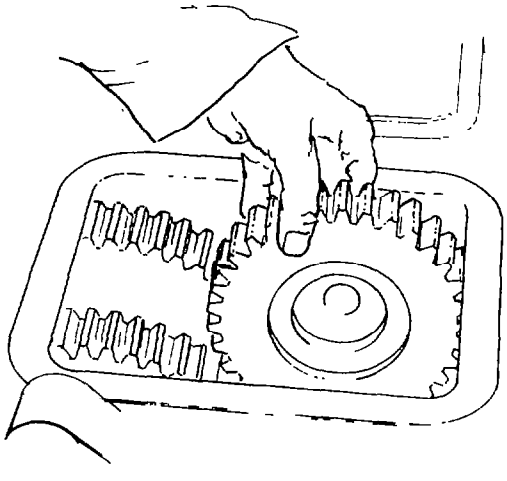

Fig. 179 — Removing Fourth Gear

q. Remove the countershaft rear bearing cover bolts and cover.
r. Remove the power take-off cover bolts and covers. Winch models, remove the power take-off (refer to EMEI VEH G 704 — Group 6).
s. Remove the lower and right-hand rear countershaft, power take-off gear, front snap ring.
t. Remove the three rear countershafts from the case through the rear bearing cover openings. While withdrawing the lower and right-hand countershafts from the case, slide the power take-off gears with their front snap ring from the shafts.
u. Place the main case in a vertical position and remove the bolts retaining the two cases together. Remove the rear case and place on a bench.
v. Remove the front countershaft thrust washer retaining snap ring then remove the thrust washers from the countershafts (see fig. 180).

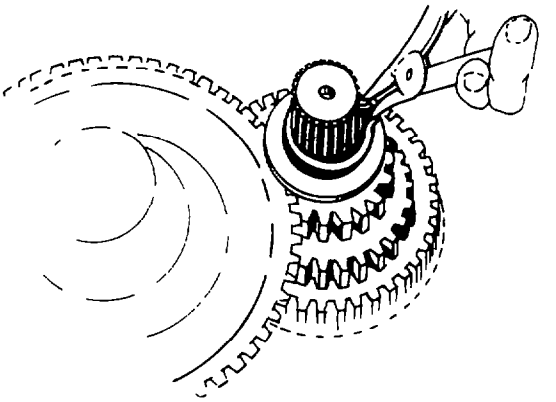

Fig. 180 — Removing Thrust Washer Retaining Snap Ring

w. Remove the mainshaft sliding clutches and gears with thrust washers from the case (see figs. 181 and 182).

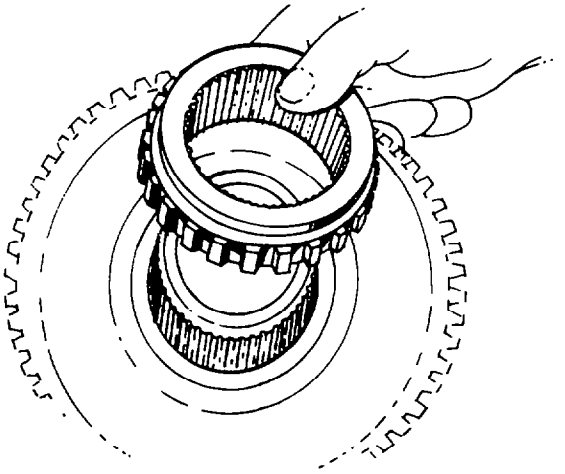

Fig. 181 — Removing First Gear Sliding Clutch

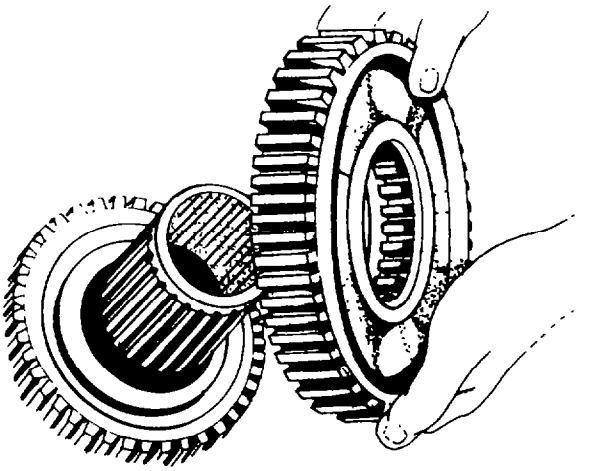

Fig. 182 — Removing First Gear

x. Place the transmission in a horizontal position and remove the countershaft front bearing cover bolts and covers.
y. Remove the snap ring from the outer race of the countershaft front bearings.
z. Position the transmission vertically, then remove the three front countershaft assemblies from the case (see fig. 183).

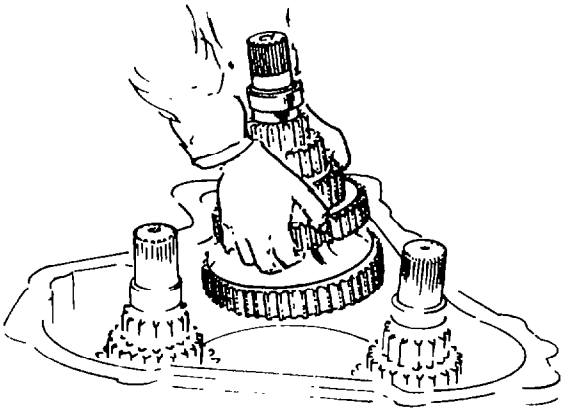

Fig. 183 — Removing Front Countershafts

## Dismantling of Sub-Assemblies

82 Main Drive Pinion

a. Remove the bearing retaining spirolox snap ring (see fig. 184).

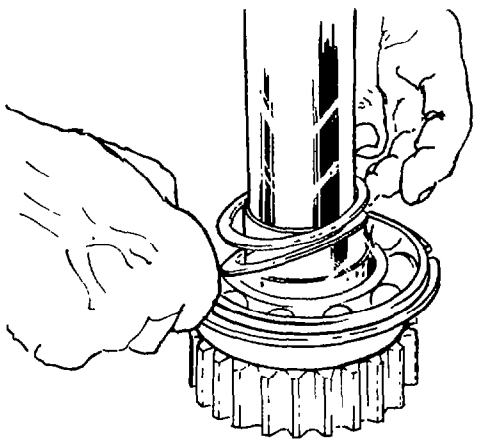

Fig. 184 — Removing Spirolox Snap Ring

b. Remove the bearing by pressing or tapping off.

c. Turn the pinion over and remove the retaining snap ring and spigot bearing.

83 Mainshaft

a. Remove the mainshaft rear bearing positioning snap ring, then press the shaft out of the bearing.

b. Place the mainshaft in a soft jawed vice and remove the spigot bearing retaining snap ring and bearing inner race.

c. Remove the reverse stop snap ring from the shaft.

84 Rear Case

a. Using a sharp tool, punch a hole in the idler shaft expansion plugs and pry the plugs out (see fig. 185).

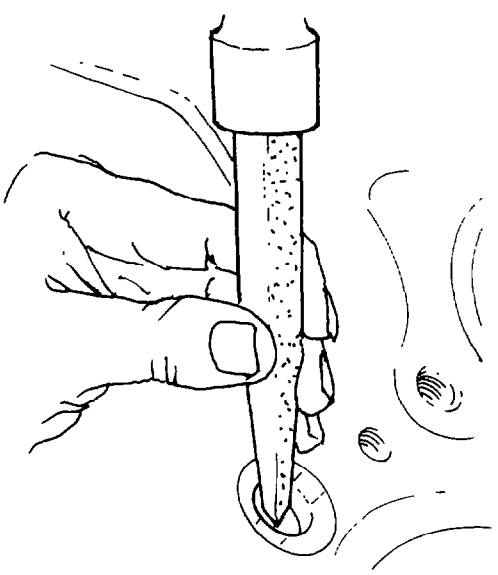

Fig. 185 — Removing Expansion Plugs

b. Use tool J-28668-A to withdraw the three idler gear shafts from the case (see fig. 186).

Fig. 186 — Installing Removal Tool

c. Remove the idler gears, bearings, thrust washers, and reverse gear from case (see fig. 187).

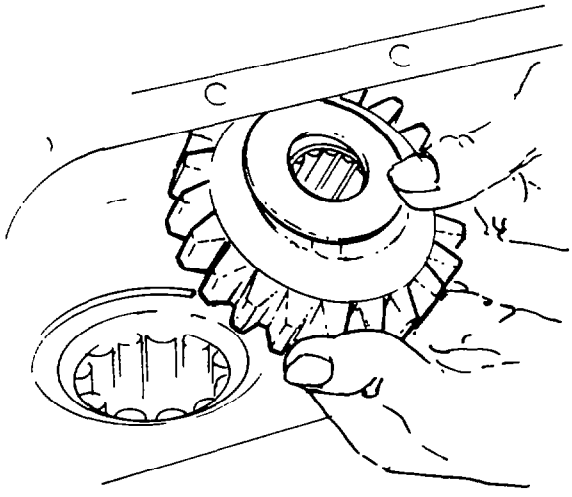


Fig. 187 — Removing Idler Gear, Thrust Washers and Bearing

d. Remove the countershaft roller bearing retaining snap ring and bearings from the case.

85 Rear Countershafts

a. Remove the countershaft rear bearing retaining snap ring and positioning snap ring, then press the countershafts out of the rear bearings.

86 Front Countershafts

a. Remove the front bearing retaining snap ring from the countershafts.
b. Remove the front bearing and the gear retaining snap ring from the countershafts.
c. Turn the countershafts over and remove the roller bearing inner race from the shafts.

87 Inspection

a. Clean the case, covers and all other parts of the transmission thoroughly with a suitable cleaning agent. Ensure all traces of old gaskets and sealer are removed, then blow dry with moisture-free compressed air.

b. Clean the bearings in a suitable cleaning agent then blow dry with clean moisture-free compressed air.

> *CAUTION:*
> *DO NOT spin the bearings with compressed air as damage to the bearings may result.*

c. Check the bearings for damage or wear, replace as necessary.

d. Inspect the gear teeth for wear, damage, scoring, surface fatigue, ridging or cracking. The gears may also be checked by Magnaflux or similar method for cracks which would not otherwise be visible.

e. Replace the selector forks and/or sliding clutches if the side clearance in the groove is in excess of 1.270 mm (0.050 in.).

f. Replace the selector shafts if cracked in either the detent or locating screw holes. Check that the clearance between the selector shaft and the housing bore does not exceed 0.254 mm (0.010 in.). Replace worn parts as necessary.

NOTE: The selector shaft wear can be determined by comparing the shaft diameter at a point free from wear, against the wear point.

g. Check the transmission cases for cracks, replace if cracked.

h. Replace detent springs if damaged or have lost tension.

i. Check all other parts for wear or damage. Replace all parts as required.

j. Clean up any damaged threads.

## Reassembly of Sub-Assemblies

88 During reassembly, use new gaskets, O-rings and seals and coat all working parts, especially the bearings, with engine oil during reassembly. As moving parts are assembled, check frequently to see that they move freely.

89 Main Drive Pinion

a. Assemble the mainshaft spigot bearing in the gear end of the main drive pinion and install the retaining snap ring.

b. Stand the pinion on the gear end and install the pinion bearing with the outer race snap ring towards the pilot end of pinion (see fig. 188).

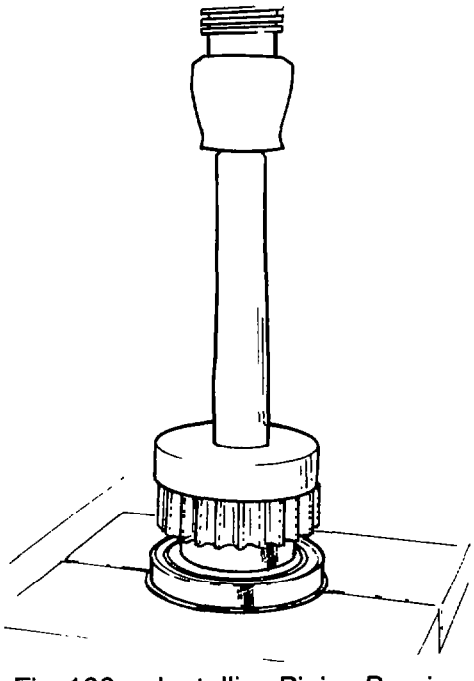

Fig. 188 — Installing Pinion Bearing

c. Install the bearing retaining spirolox snap ring (see fig. 189).

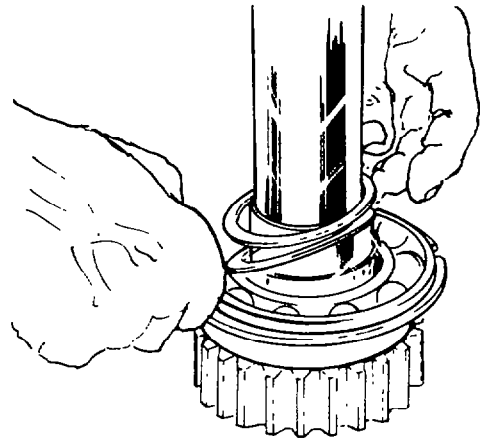

Fig. 189 — Installing the Spirolox Snap Ring



90 Mainshaft

a. Install the spigot bearing inner race on the mainshaft spigot and install the retaining snap ring.
b. Position the mainshaft in a press with the spigot end down and press the mainshaft rear bearing onto the shaft.
c. Install the positioning snap ring in the outer race of the bearing.
d. Install the reverse gear stop snap ring onto the shaft.

91 Rear Case

a. Install the inner snap ring of the countershaft centre bearing, then install and seat the bearing against the snap ring.
b. Install the outer retaining snap ring.
c. Start the reverse idler shafts into the case. Position the shafts so that the centreline of the flats on the end of the shafts are pointing towards the centreline of the countershaft bores (see fig. 190).

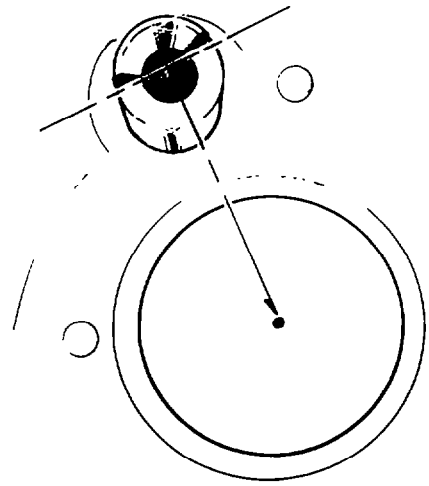

Fig. 190 — Aligning Reverse Idler Shaft

d. Assemble the bearings into the idler gears, then position the idler gears with thrust washers at each end in the case (rounded teeth of idler gears towards the front of transmission) (see fig. 191). Using a soft hammer tap the shaft into the case through the thrust washers and gears.

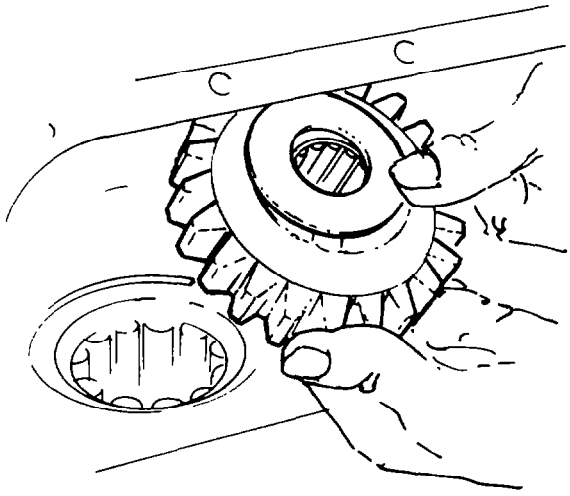


Fig. 191 — Installing Reverse Idler Gear Assembly

e. Apply silicone sealer around the end of the idler shaft, then install expansion plugs into the shaft bore (see fig. 192).

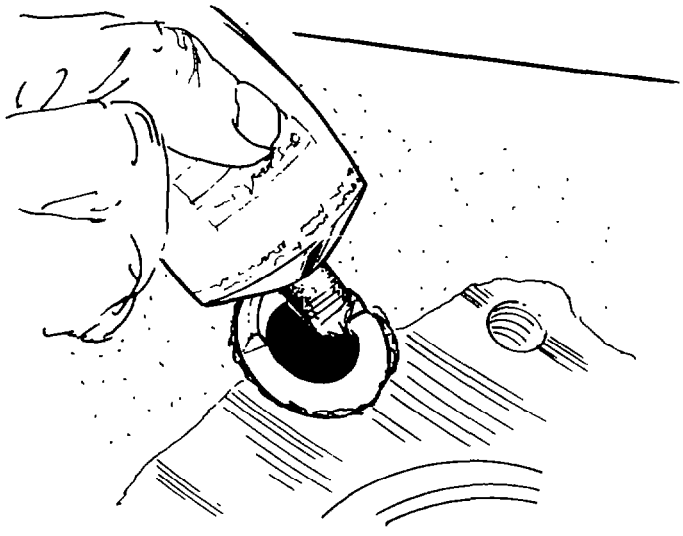

Fig. 192 — Applying Sealer Compound

f. Install the reverse gear through the top cover hole of the case, ensure that the selector groove of the gear is towards the front of the transmission.

92 Rear Countershafts

a. Install the power-take-off (PTO) gear inner snap ring in the grooves provided in the lower and right hand countershafts.
b. Press the rear bearings onto the ends of the countershafts and retain with the snap rings.
c. Install the positioning snap ring on the outer bearing race.

93 Front Countershafts (refer to fig. 193)

a. Press the centre bearing inner race onto the rear end of the countershafts.
b. Insert the gear keys in the countershafts and press the gears on one at a time.

NOTE: The gears have an interference fit and can be pressed on cold, but for best results, the gears should be heated to 132 °C (270 – 300 °F) by means of a heat lamp or hot oil, for a period of not more than half an hour. Oil the shaft for each gear with OEP 220.

c. Install the gear retaining snap ring.
d. Press the bearings onto the front end of the countershafts and install the retaining snap rings.



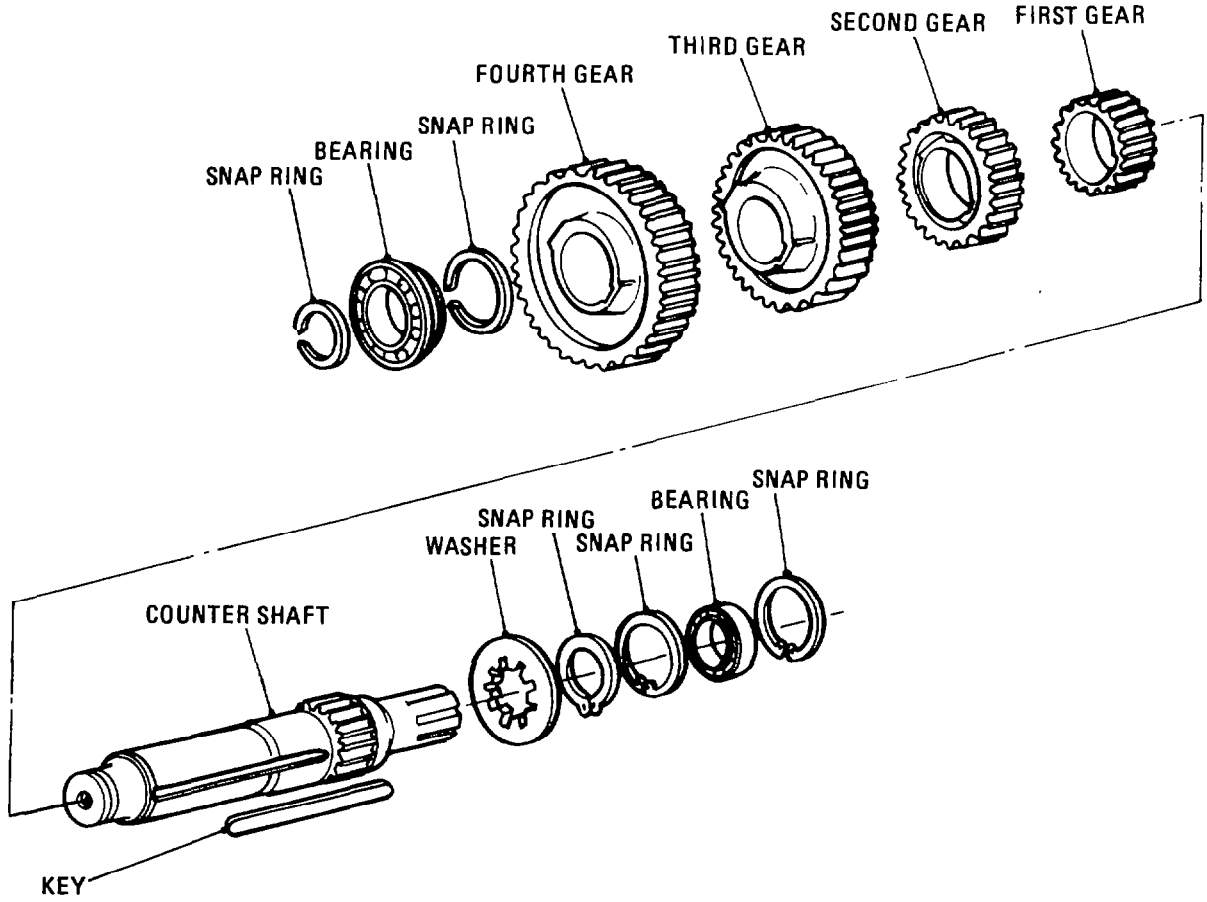


Fig. 193 — Exploded View of Front Countershaft Assembly

94 Main Components

a. Position the transmission front case vertically and install the three front countershaft assemblies in the case (see fig. 194).

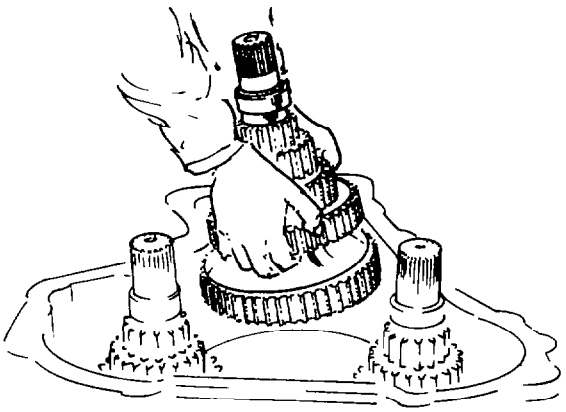

Fig. 194 — Installing Countershaft Assemblies

b. Turn the front case to the horizontal position and install the front countershaft bearing positioning snap ring in the outer race of the bearing, then tap the countershafts rearward with a soft hammer until the positioning snap ring seats against the case.

c. Insert new O-rings in the countershaft front bearing covers and install the covers. Torque the retaining bolts to 23 – 38 Nm (18 – 28 lb.ft).

d. Place the transmission front case in a vertical position. Install the mainshaft third gear with the alignment "O" marks on the gear face mating with the alignment "O" marks on the third gear on the countershafts (see fig. 195).

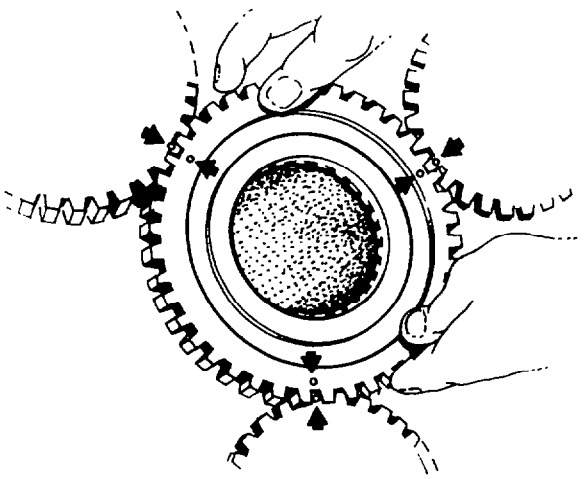

Fig. 195 — Installing Mainshaft Third Gear

e. Install the second/third gear sliding clutch and engage it with the third gear clutch teeth (see fig. 196).

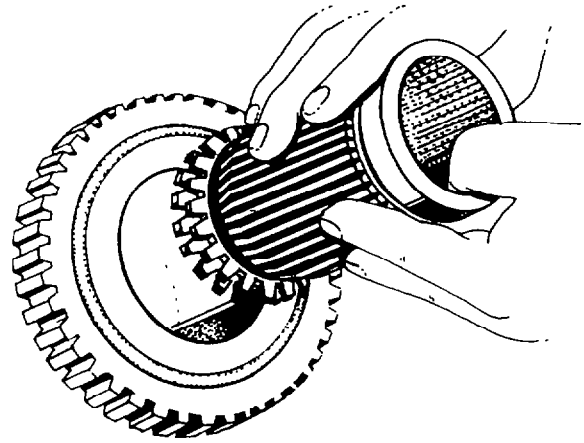

Fig. 196 — Installing Second/Third Gear Sliding Clutch

f. Apply a light coat of grease (XG274) to the thrust surface of second gear, then place the thrust washer over the thrust surface. Install the second gear with the thrust washer towards third gear. Engage second gear with the second gears on the countershafts (see figs. 197 and 198).

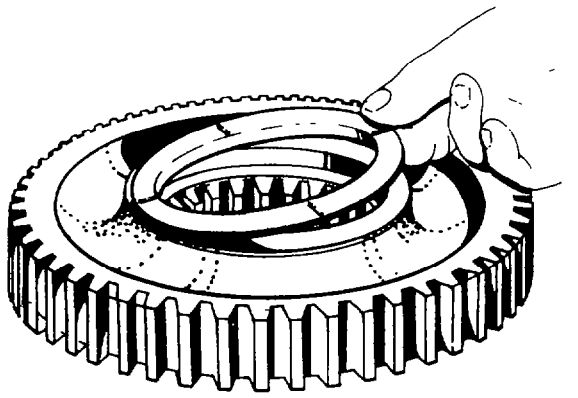

Fig. 197 — Positioning Thrust Washer on Second Gear

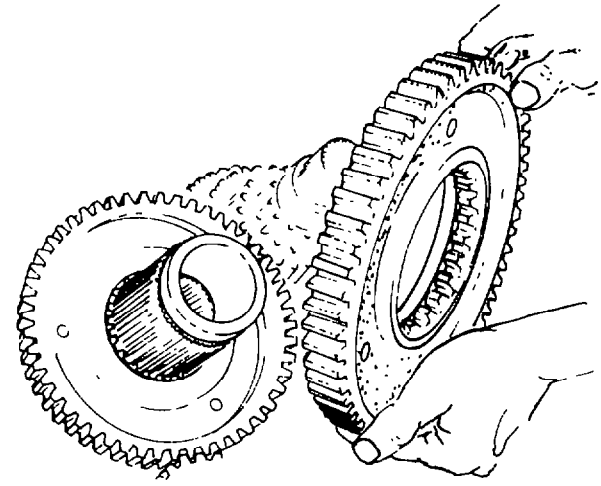

Fig. 198 — Installing Second Gear

g. Install the first gear with the thrust washer towards second gear. Engage first gear with the first gears on the countershafts (see fig. 199).

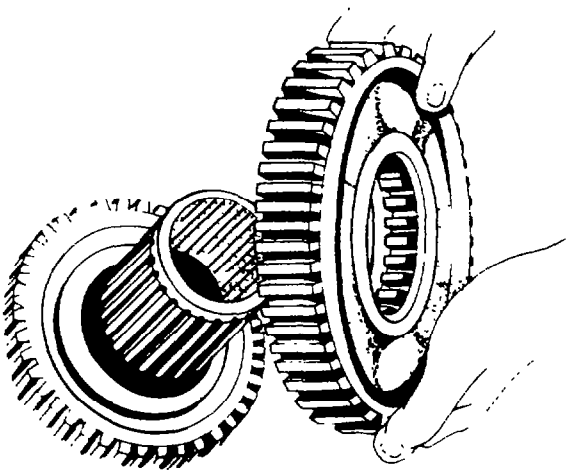

Fig. 199 — Installing First Gear

h. Install the first gear sliding clutch on second/third sliding clutch (see fig. 200).

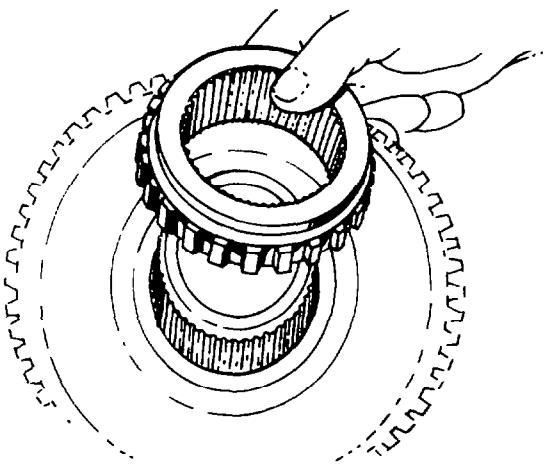

Fig. 200 — Installing First Gear Sliding Clutch

i. Install the thrust washers on each of the countershafts and retain with snap rings (see fig. 201).

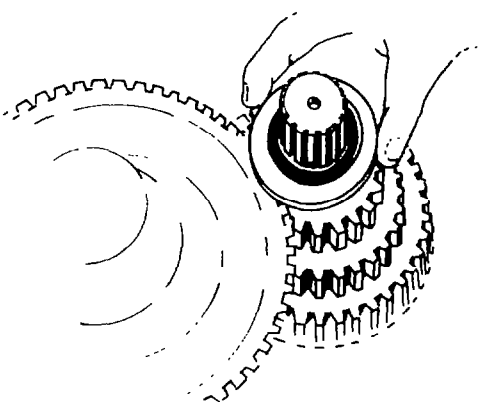

Fig. 201 — Installing Thrust Washers

j. Apply a silicone sealer to the rear end of the front case and install the case-to-case gasket. Paint the rim of the gasket with sealer then lower the rear case assembly over the assembled countershafts (see fig. 202).

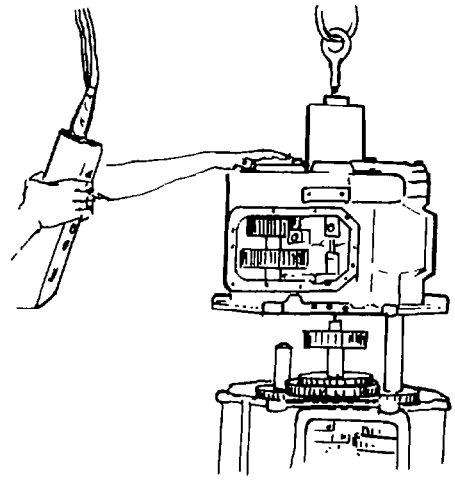

Fig. 202 — Positioning Rear Case Assembly

k. Tap the case into position so that the countershaft bearings are properly seated.
l. Install the case-to-case bolts and nuts and torque to 89 – 101 Nm (65 – 75 lb.ft).
m. Position the transmission horizontally, and start the rear countershafts through the rear bearing openings in the case (see fig. 203).

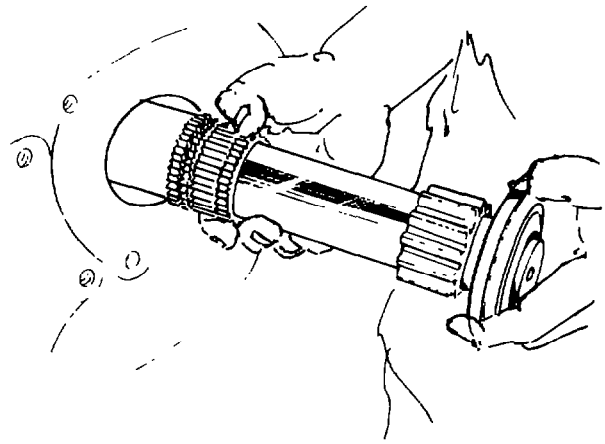

Fig. 203 — Installing Rear Countershafts

n. Install the power-take-off (PTO) gear onto the countershaft splines then install the front snap ring in the groove in the countershaft (see fig. 204).

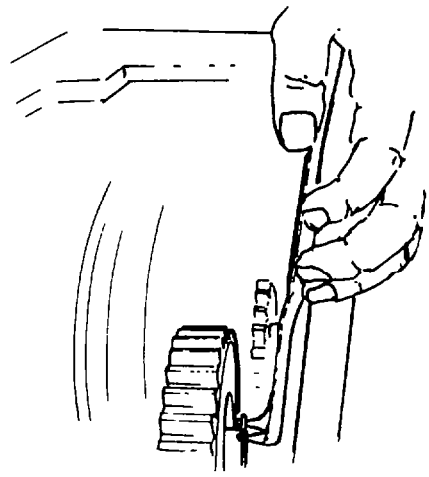

Fig. 204 — Installing PTO Gear

NOTE: The PTO gears are fitted to the lower and the right hand countershafts only. The left hand countershaft does not have a PTO gear fitted.

o. Align the timing "O" marks on the front and rear countershafts, then push the rear countershaft in until the rear bearing positioning snap ring seats against the case (see fig. 205).

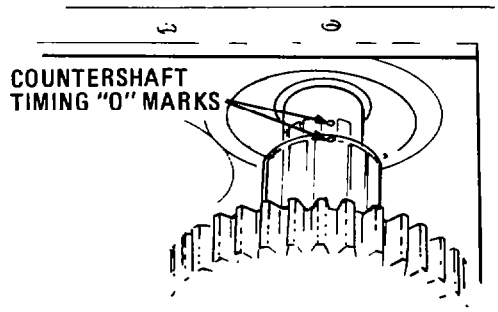


Fig. 205 — Aligning Timing "O" Marks

p. Insert new O-rings in the countershaft rear bearing covers and install the covers. Torque the retaining bolts to 41 – 54 Nm (30 – 40 lb.ft).
q. Install the third gear thrust washer in third gear.
r. Install the fourth gear in the case (clutch teeth forward) with the thrust washer, and engage with the countershaft gears (see fig. 206).

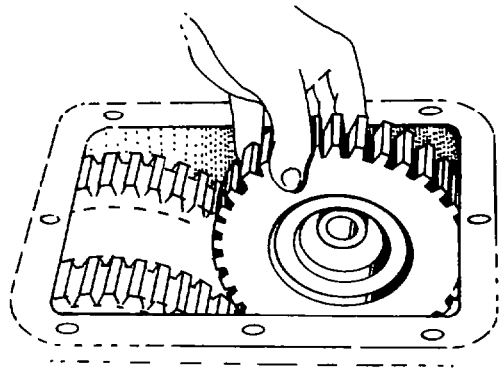

Fig. 206 — Installing Fourth Gear

s. Engage the reverse sliding gear with the reverse idler gears.

t. Start the mainshaft in the case through the rear bearing opening (see fig. 207). Advance the mainshaft through the reverse gear, second/third gear sliding clutch and fourth gear until the rear bearing positioning snap ring seats against the case.

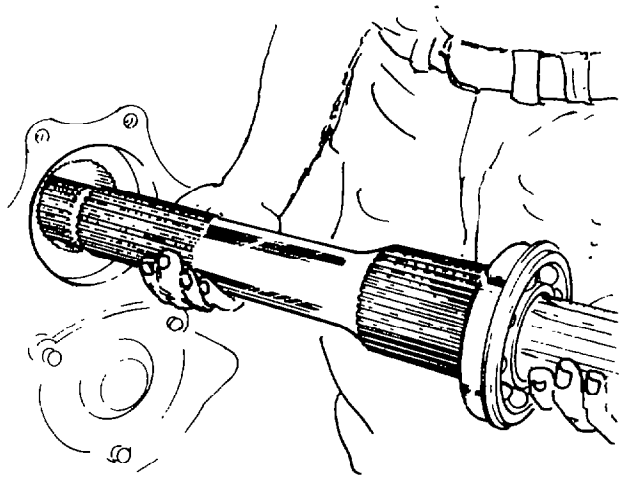

Fig. 207 — Installing Mainshaft

u. After installing a new seal in the mainshaft rear bearing cover, apply silicone sealer to the gasket surface and install the gasket and cover to the case. Torque the retaining bolts to 142 - 155 Nm (105 - 115 lb.ft).

v. Apply oil (OEP220) to the lip of the cover seal and install the drive yoke, clamp plate and bolt. Tighten the bolt to 650 - 705 Nm (480 - 520 lb.ft).

NOTE: It will be necessary to select two gears thus locking the gearbox to enable the yoke retaining bolt to be torqued.

w. Install the fourth gear selective thrust washer and snap ring onto the mainshaft (see fig. 208).

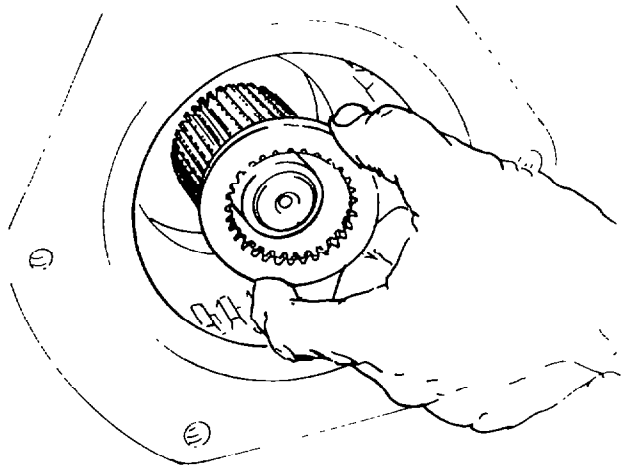

Fig. 208 — Installing Fourth Gear Selective Thrust Washer

x. Using two feeler gauges, check the end play between the third gear thrust washer and fourth gear (see fig. 209). End play should be 0.635 – 0.889 mm (0.025 – 0.035 in).

NOTE: If the end play is incorrect, replace the fourth gear selective thrust washer which is available in varying thicknesses.

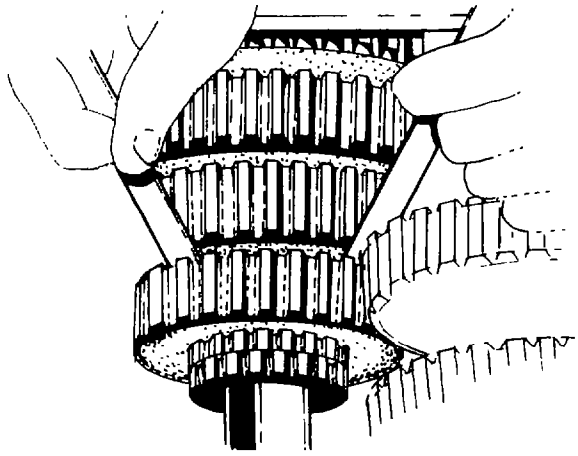

Fig. 209 — Checking End Play

y. Install the fourth/fifth gear sliding clutch and engage with fourth gear (see fig. 210).

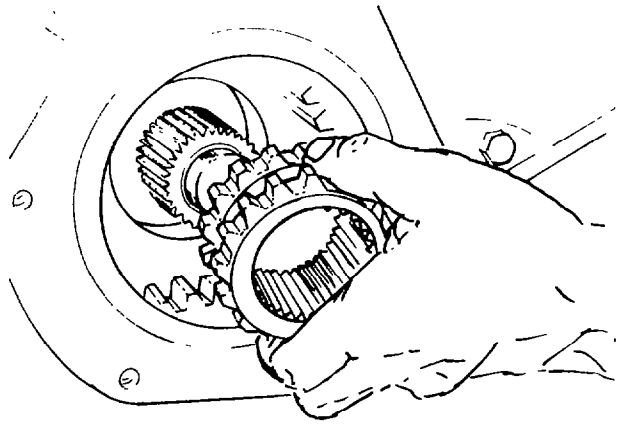

Fig. 210 — Installing Fourth/Fifth Gear Sliding Clutch

z. Install the main drive pinion taking care not to damage the spigot bearing (see fig. 211).

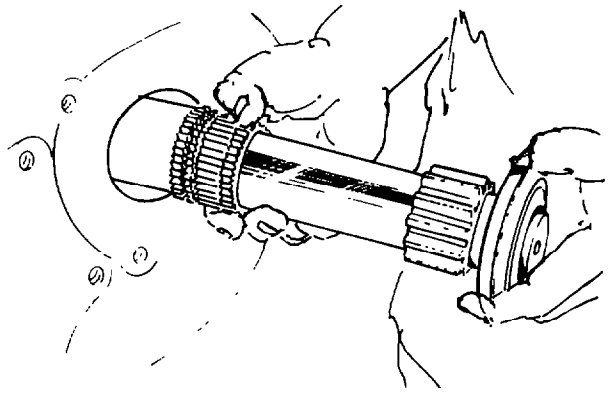

Fig. 211 — Installing Main Drive Pinion

aa. Install tool J-23796 in the main drive pinion bearing cover and carefully pass it through the cover oil seal.

NOTE: Tool J-23796 prevents the seal being damaged by the main drive pinion splines during installation of the bearing cover.

ab. Apply a silicone sealer compound to the gasket surfaces of the cover and the transmission. Position the gasket on the cover, then install the cover assembly. Install the retaining bolts and torque to 41 – 54 Nm (30 – 40 lb.ft).

ac. Install the reverse selector fork on the reverse sliding gear and install the first gear selector fork on the first-gear sliding clutch (see fig. 212).

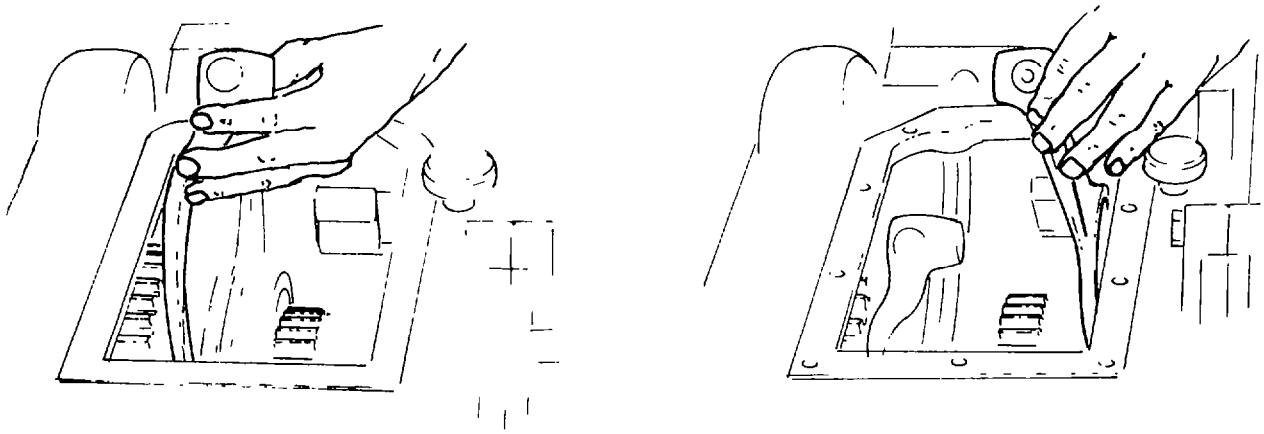

Fig. 212 — Installing First and Reverse Selector Forks

ad. Install the first and reverse gear selector shaft through the front of the case and install the first and reverse selector onto the shaft while feeding the shaft through the case. Advance the selector shaft through the intermediate bore of the case, through the first gear selector fork, front snap ring, reverse selector fork and the rear snap ring until the shaft reaches the neutral position.

NOTE: Assemble the snap rings with the rounded edge of the rings towards the reverse selector fork. After assembling the snap rings, rotate them 30 degrees to ensure that the rings are properly seated.

ae. Install the fork and selector locating screws and torque to 47 – 61 Nm (35 – 45 lb.ft).

af. Start the second/third gear selector shaft through the hole in the rear of the case. Install the second/third selector fork in the groove of the second/third gear sliding clutch. Push the selector shaft through the fork and the intermediate bore of the case. Install the second/third gear selector on the shaft and continue advancing the shaft into the front support until it reaches the neutral position, then install the fork and selector locating screws and torque to 47 – 61 Nm (35 – 45 lb.ft) (see fig. 213).

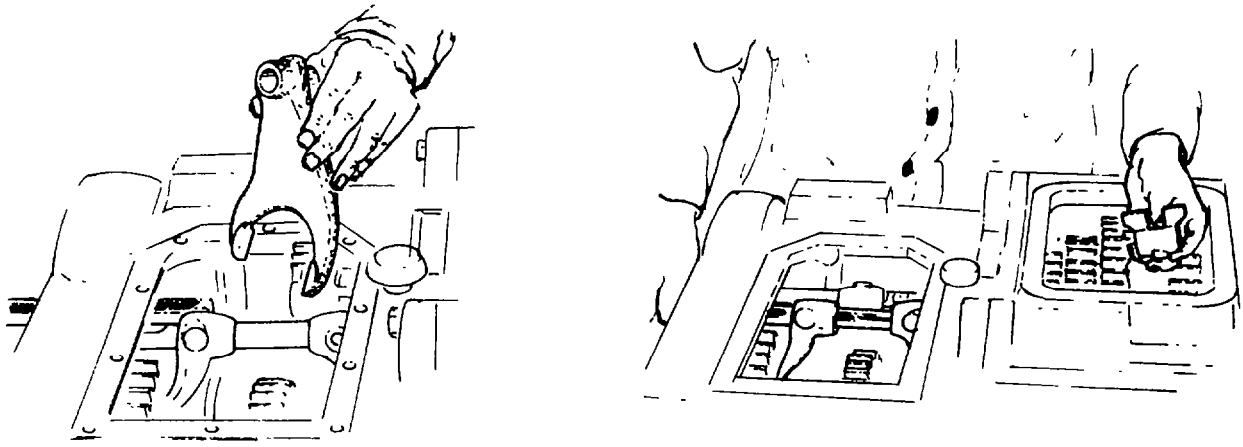

Fig. 213 — Installing Second/Third Gear Selector and Selector Fork

ag. Start the fourth/fifth gear selector shaft in the hole provided in the front of the case. Install the fouth/fifth gear selector fork in the groove of the fourth/fifth sliding clutch (see fig. 214). Feed the selector shaft through the fork and the intermediate bore of the case until it reaches neutral position. Install the fork locating screw and torque to 47 – 61 Nm (35 – 45 lb.ft).

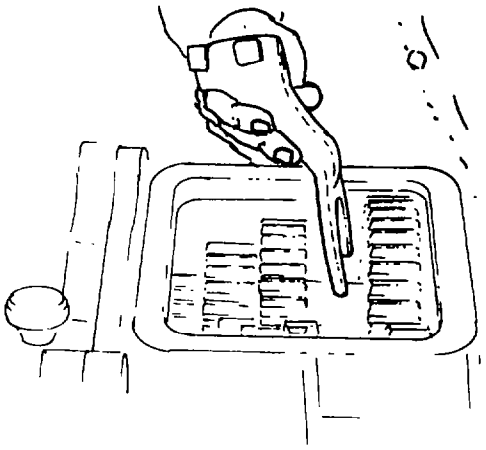

Fig. 214 — Installing Fourth/Fifth Gear Selector Fork

ah. Install the first/reverse selector shaft and the fourth/fifth selector shaft oil seals and the second/third selector shaft expansion plug at the front of the case.
ai. Install the selector shaft expansion plugs at the rear of the case.
aj. Install the selector shaft detent balls and springs in holes provided in the top of the case.
ak. Install the detent ball cover bolts and torque them to 24 – 38 Nm (18 – 28 lb.ft) (see fig. 215).

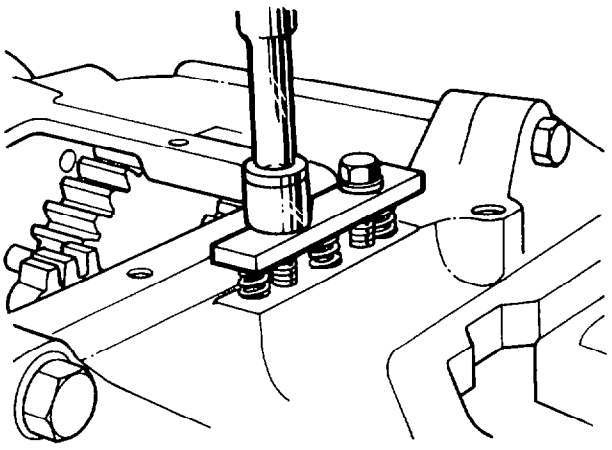

Fig. 215 — Installing Detent Ball Cover

al. Apply silicone sealer to the transmission case top cover gaskets and install them on the case, then install covers and retaining bolts. Torque the retaining bolts to 24 – 38 Nm (18 – 28 lb.ft).
am. Apply silicone sealer to the surface of the PTO covers. Install the covers and torque the retaining bolts to 24 – 38 Nm (18 – 28 lb.ft).
an. Refill the transmission with 10.4 litres (2.338 gal.) of fresh OEP 220 oil.
ao. Install the transmission (refer EMEI VEH G 704 — Group 6).
ap. Road test the truck and check the operation of the transmission.

# — FAULT FINDING —

## Transmission

| Symptom | Probable Cause | Action |
|---|---|---|
| 1. Noisy. | a. Chipped or damaged gears. | a. Replace gears, and any damaged or worn components. |
| | b. Excessive mainshaft gear end-play. | b. Correct end-play. Replace parts as required. |
| | c. Bearing failure. | c. Replace bearings. |
| 2. Difficult gear selection. | a. Worn selector shaft bores. | a. Install new bushes. |
| | b. Worn mainshaft spigot bearing. | b. Replace spigot bearing. |
| | c. Worn transmission input shaft splines. | c. Replace input shaft and clutch assembly. |
| 3. Gear disengagement. | a. Bent or worn selector forks. | a. Replace damaged forks. |
| | b. Bent selector shafts or worn detents. | b. Replace damaged selector shaft and detent balls. |
| | c. Worn mainshaft spigot bearing. | c. Replace spigot bearing. |
| | d. Engine flywheel housing misaligned. | d. Rectify. |

RESERVED

# GROUP 7 — TRANSFER CASE

## TRANSFER CASE OVERHAUL

95 Having removed the Transfer Case from the truck (refer EMEI VEH G 704 — Group 7) proceed as follows:

a. Mount the transfer case in a suitable overhaul stand and position the case vertically, i.e. front drive housing facing up.

b. Remove the retaining bolt and clamp plate from the front output shaft drive yoke and remove the drive yoke, using the yoke puller illustrated in fig. 216.

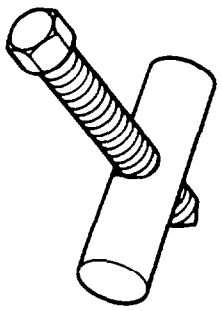

Fig. 216 — Drive Yoke Puller

c. Remove the front output shaft bearing cover assembly and adjusting shims. Wire the adjusting shims together for use at reassembly (see fig. 217).

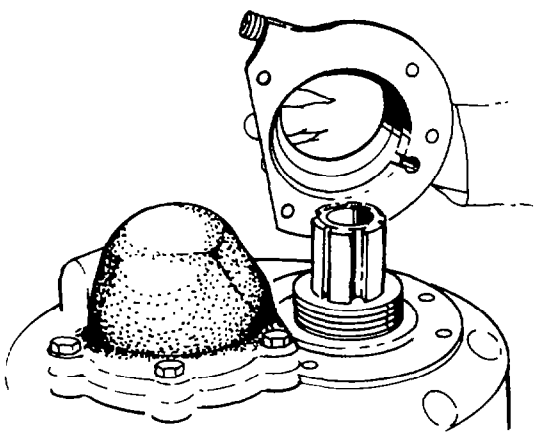

Fig. 217 — Removing Bearing Cover Assembly

d. Remove the front drive shaft bearing cover, then remove the bearing retaining bolt and clamp plate (see fig. 218).

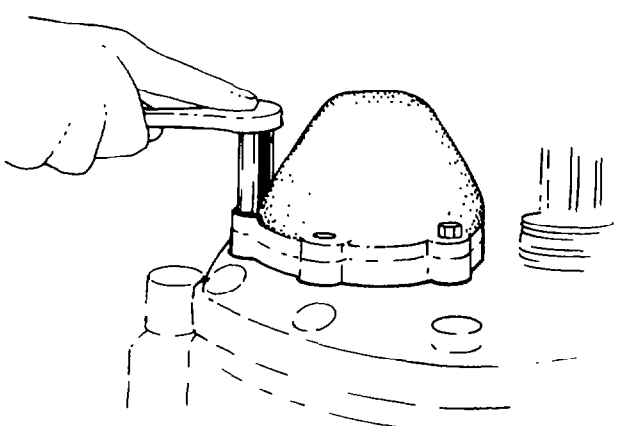

Fig. 218 — Removing Front Drive Shaft Bearing Cover

e. Remove the bolts and nuts retaining the drive housing end-plate to the transfer case and remove the end-plate and the drive shaft outer bearing cone as an assembly (see fig. 219).

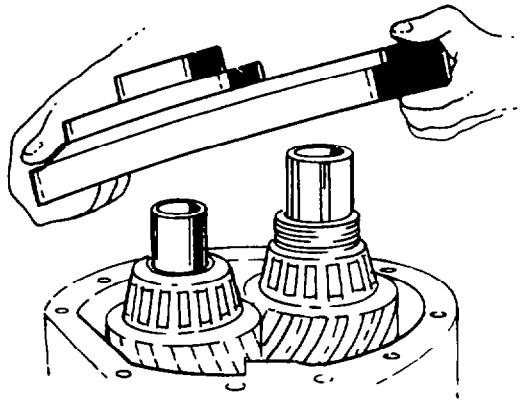

Fig. 219 — Removing Drive Housing End Plate

f. Place the end-plate in a press and remove the front drive shaft bearing retainer.
g. Remove the front output shaft assembly (see fig. 220).

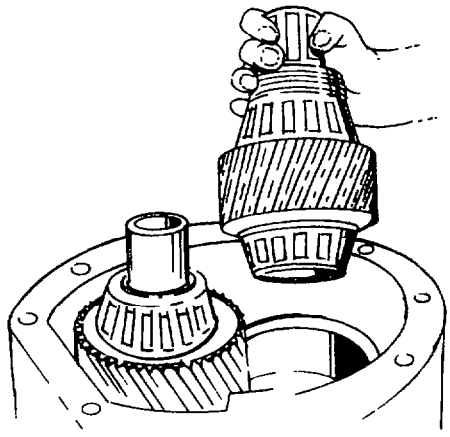

Fig. 220 — Removing Front Output Shaft Assembly

h. Remove the front drive shaft inner bearing cone and the selective bearing spacer from the shaft (see fig. 221).

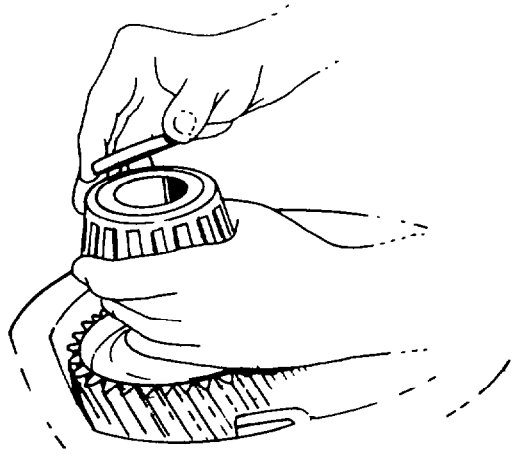

Fig. 221 — Removing Inner Bearing Cone and Bearing Spacer

i. Remove the front drive gear from the front drive shaft (see fig. 222).

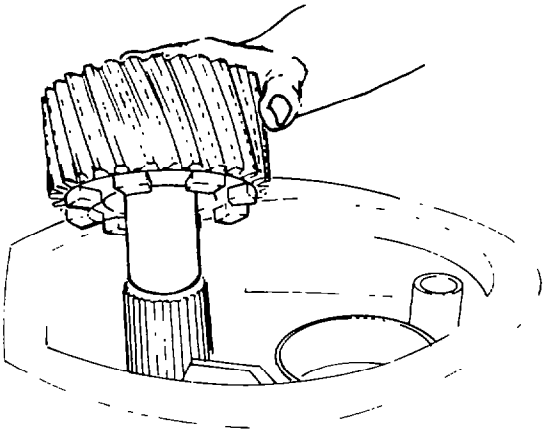

Fig. 222 — Removing Front Drive Gear

j. Remove the front drive selector assembly from the front drive housing (see fig. 223).

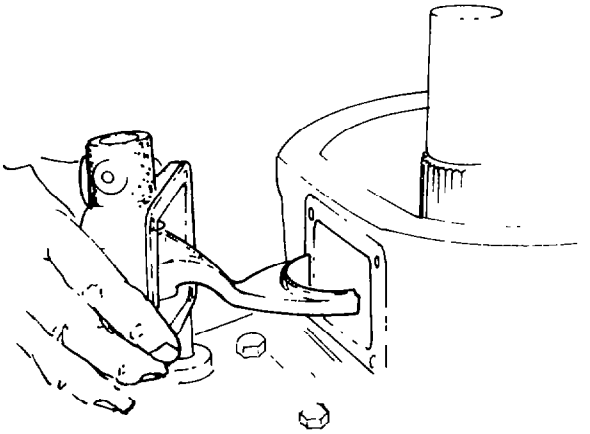

Fig. 223 — Removing Front Drive Selector Assembly

k. Remove the front drive sliding clutch from the front drive shaft (see fig. 224).

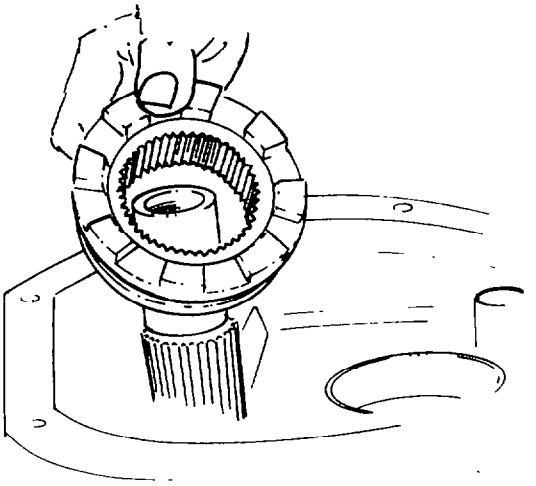

Fig. 224 — Removing Sliding Clutch

l. Remove the mainshaft front drive yoke retaining bolt (left-hand thread) and clamp plate and remove the drive yoke.
m. Remove the front drive housing retaining bolts and nuts and carefully remove the front drive housing (see fig. 225).

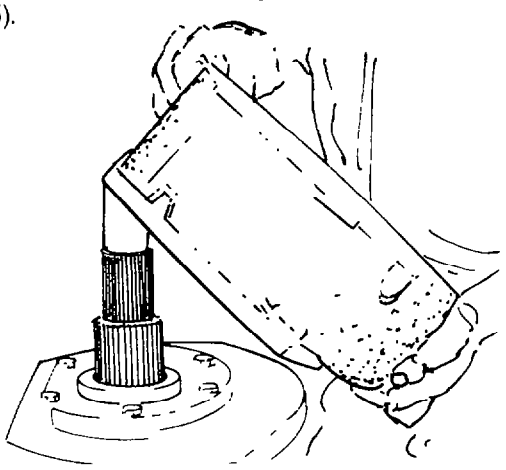

Fig. 225 — Removing Front Drive Housing

n. Turn the transfer case over so that the rear of the case is facing up.
o. Disconnect the oil pipe and remove the rear mainshaft cover.
p. Remove the rear drive shaft yoke retaining bolt and clamp plate and remove the drive yoke.
q. Remove the rear drive shaft cover assembly.
r. Remove the rear drive shaft bearing retainer bolts and remove the bearing retainer. Install puller bolts in the holes provided in the retainer and remove the retainer assembly from the case by applying pressure evenly and alternately to these bolts (see fig. 226).

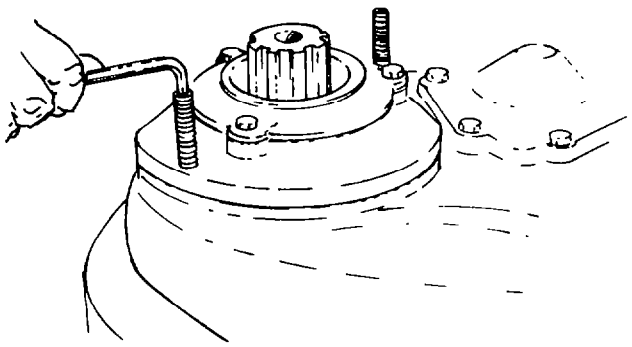

Fig. 226 — Removing Retainer Assembly

s. Remove the countershaft rear bearing cover and adjusting shims. Wire the adjusting shims together for use at reassembly (see fig. 227).

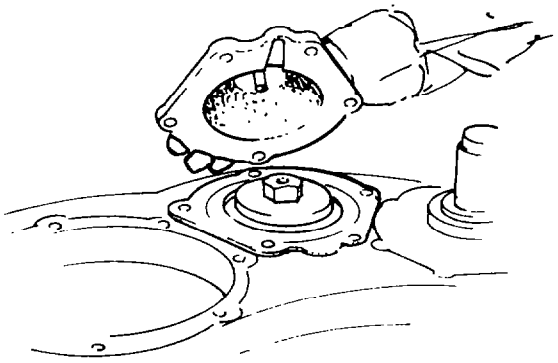

Fig. 227 — Removing Countershaft Rear Bearing Cover

t. Remove the transfer case rear end-plate retaining bolts. With the aid of suitable lifting equipment remove the rear end-plate from the transfer case (see fig. 228).

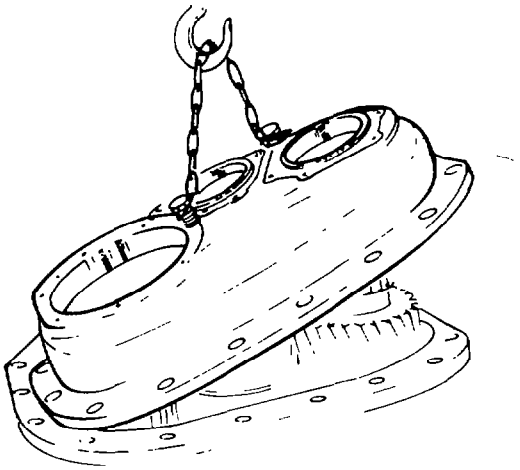

Fig. 228 — Removing Rear End Plate

u. Remove the six planet gears from the planet gear cage (see fig. 229).

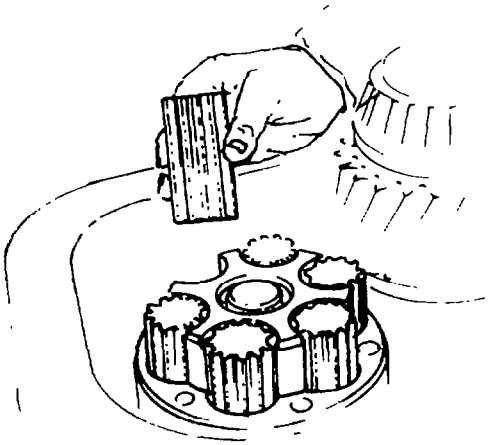

Fig. 229 — Removing Planetary Gears

v. Remove the planet cage retaining bolts (female head) and remove the planet cage (see fig. 230).

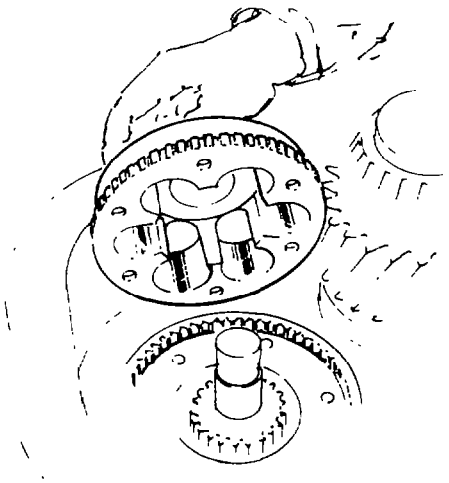

Fig. 230 — Removing Planet Gear

w. Remove the front drive shaft (see fig. 231).

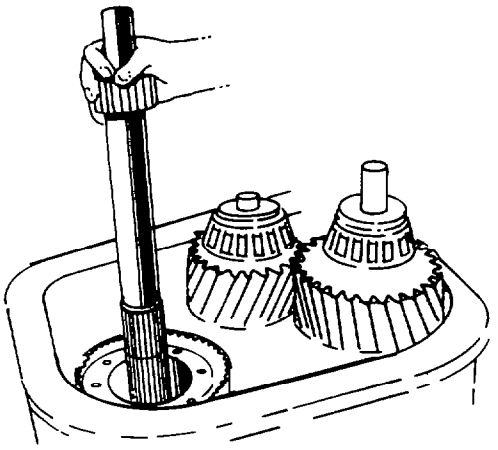

Fig. 231 — Removing Front Drive Shaft

NOTE: If the mainshaft is to be disassembled, the rear bearing nut must be loosened before removing the mainshaft from the case. Place a soft iron wedge between the countershaft and mainshaft gears then loosen the nut with tool J-24560.

x. Remove the mainshaft assembly from the case (see fig. 232).

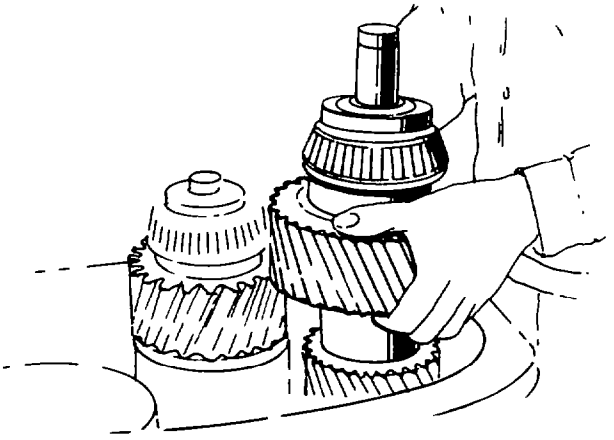

Fig. 232 — Removing Mainshaft Assembly

y. Remove the selector shaft detent ball retaining bolt which is located at the right-hand mounting pad. Remove the detent ball spring, and with the aid of a magnet remove the detent ball (see fig. 233).

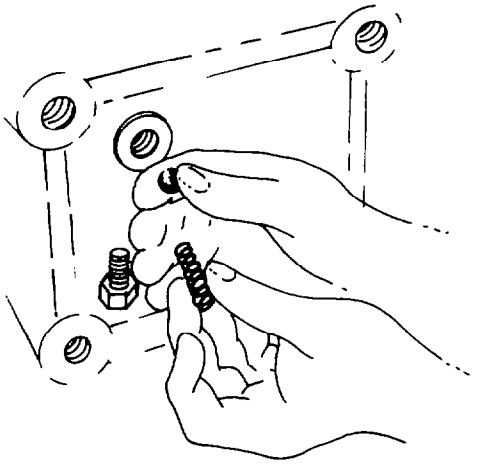

Fig. 233 — Removing the Detent Ball and Spring

z. Remove the Hi-Lo range selector fork locating screw through the case rear opening. Turn the case to the horizontal position and remove the selector shaft from the front of the case (see fig. 234).

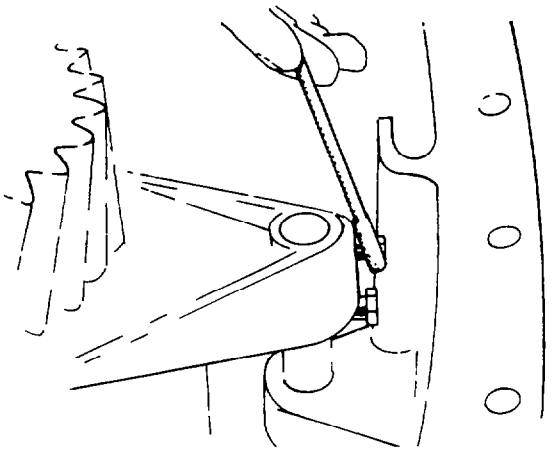

Fig. 234 — Removing Selector Shaft

aa. Position the transfer case vertically with the rear of the case facing up and remove the Hi-Lo range selector fork (see fig. 235).

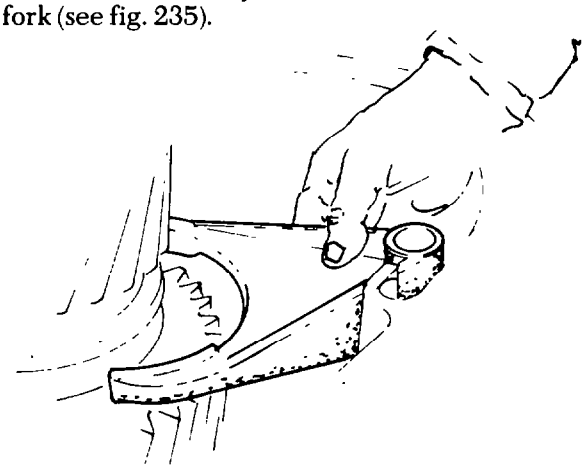

Fig. 235 — Removing Selector Fork

ab. Remove the countershaft rear bearing retaining bolt (left-hand thread) and clamp plate. Insert and eye bolt in the retaining bolt hole and with the aid of suitable lifting equipment remove the countershaft assembly (see fig. 236).

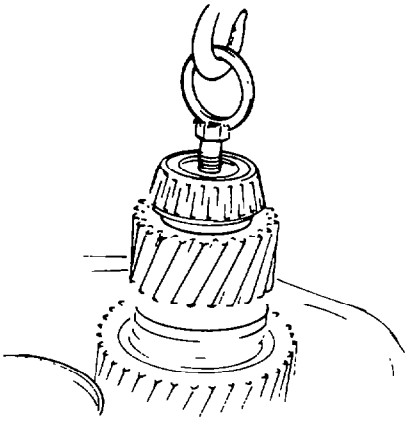

Fig. 236 — Removing Countershaft Assembly

ac. Turn the transfer case over so that the front of the case is facing up.
ad. Remove the mainshaft and counter shaft front bearing cover (see fig. 237).

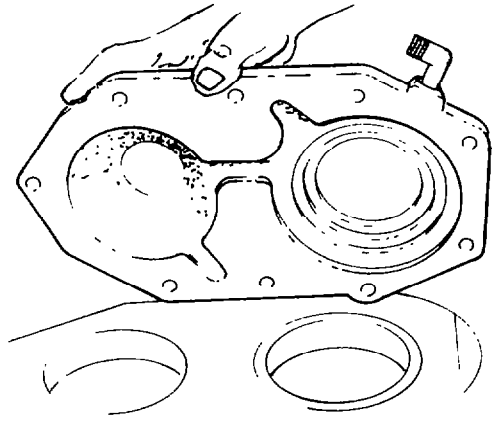

Fig. 237 — Removing Front Bearing Cover

ae. Place the transfer case in the horizontal position. Install a soft iron wedge between the drive shaft gear and the transfer case, and using tool J-24560 remove the drive shaft front bearing nut (left-hand thread) from the shaft.
af. Remove the drive shaft front bearing and selective bearing spacer (see fig. 238).

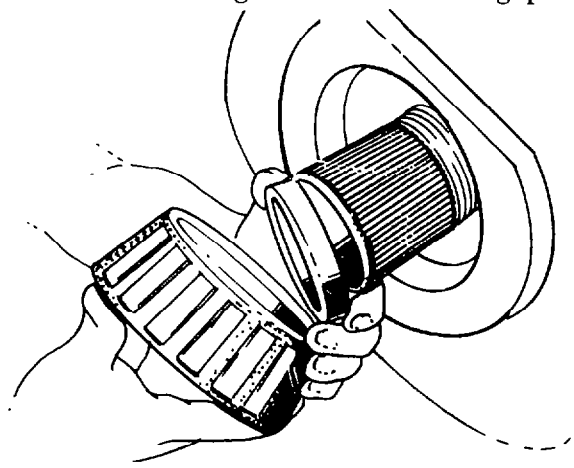

Fig. 238 — Removing Bearing and Bearing Spacer

ag. Position the transfer case vertically with the rear of the case facing up. Remove the drive shaft assembly and thrust washer from the case (see fig. 239).

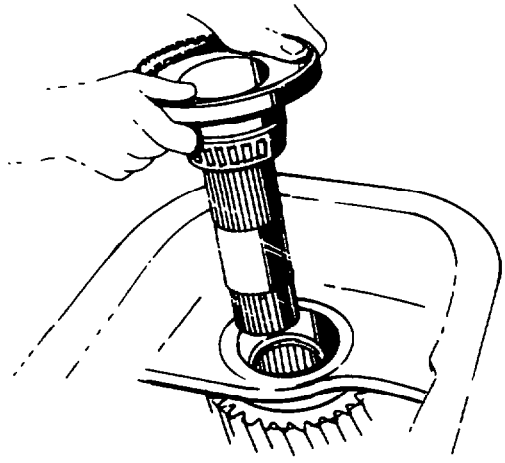

Fig. 239 — Removing Drive Shaft Assembly

ah. Turn the transfer case 180 degrees (front of case facing up). Remove the bolts from the drive shaft bearing retainer and install puller bolts. Tighten the puller bolts evenly and alternately to remove the bearing retainer and outer race from the case (see fig. 240).

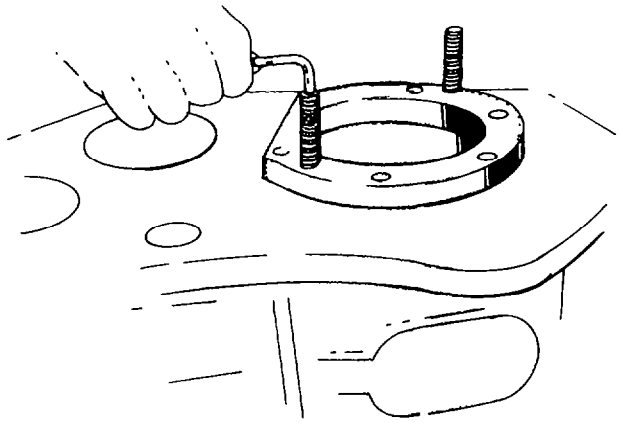

Fig. 240 — Removing Bearing Retainer



ai. Turn the transfer case 180 degrees (rear of case facing up), then remove the drive shaft gear from the case (see fig. 241).

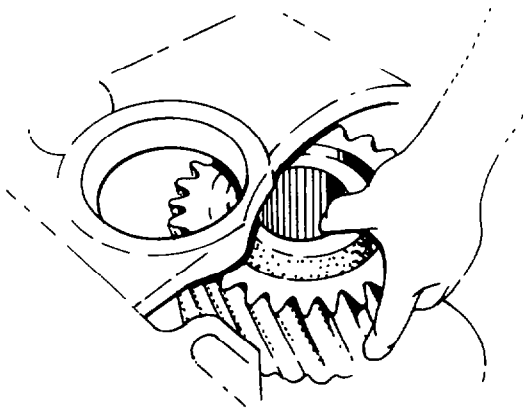

Fig. 241 — Removing Drive Shaft Gear

## Dismantling of Sub-Assemblies

96 Mainshaft

a. Using a suitable puller, remove the front bearing from the mainshaft. Remove the rear bearing nut which was previously loosened, then place the mainshaft in a press and press the mainshaft out of the rear bearing and the Hi-range gear. Remove the Hi-range gear key.

97 Countershaft

a. With the aid of a suitable puller, remove the countershaft rear bearing, then remove the bearing thrust washer, the thrust washer lock pin and the Hi-range gear with bearings and spacer from the shaft.
b. Remove the Hi-Lo range sliding clutch.
c. Turn the countershaft over and remove the front bearing retaining bolt and clamp plate.
d. Using a suitable puller remove the front bearing, the main drive gear, the thrust washer ring and split thrust washers, the Lo-range gear with bearings and spacer from the shaft.

98 Main Drive Shaft

a. Remove the drive shaft rear bearing.

99 Front Output Shaft

a. Using a suitable puller remove the rear bearing from the output shaft.
b. Turn the shaft over and pull the front bearing, bearing spacer, and speedometer drive worm as an assembly from the shaft.

100 Rear Drive Shaft

a. Place the rear drive shaft assembly in the press and press the shaft out of the outer bearing cone and bearing retainer and remove the selective spacer.
b. Using a suitable puller remove the drive shaft inner bearing cone from the shaft. Then remove the bearing cups and retainer using the puller.

101 Front Drive Shaft Bearing Retainer

a. Using a suitable puller, remove the drive shaft inner and outer bearing cups from the retainer.

102 Inspection

a. Clean the case, covers and all other parts of the transfer case thoroughly in a suitable cleaning agent. Ensure that all traces of old gaskets and sealer are removed, then blow dry with clean moisture-free compressed air.
b. Clean the bearings in a suitable cleaning agent, then blow dry with clean, moisture-free compressed air.

> *CAUTION:*
> *DO NOT spin the bearings with compressed air, as damage to the bearings may result.*

c. Check the condition of the bearings and replace if they are worn or damaged in any way.
d. Replace any gear where the teeth are showing signs of damage, cracking or excessive wear. The gears are also to be checked by Magnaflux or similar method for cracks which would otherwise not be visible.
e. Replace selector forks and/or sliding clutches if the side clearance in the groove is in excess of 1.270 mm (0.050 in.).
f. Replace the selector shaft if cracked in either the detent or locating screw hole. Check that the clearance between the selector shaft and the housing bore does not exceed 0.254 mm (0.010 in.). Replace worn parts as necessary.

NOTE: The selector shaft wear can be determined by comparing the shaft diameter at a point free from wear against the wear point.

g. Replace all oil seals.
h. Replace cases found to be cracked. Check all other parts for wear and damage. Replace all parts as required. Replace all gaskets, O-rings and any part that shows mutilation. Replace the detent spring if it is broken or has lost tension. Clean up any thread showing signs of damage.

## Reassembly of Sub-Assemblies

103 All working parts, especially the bearings, should be coated with engine oil (OMD115) while the transfer case is being assembled. As moving parts are assembled, check frequently to see that they move freely.

NOTE: When pressing bearing cups into a retainer or housing, or pressing bearing cones onto a shaft, ensure that the shaft, housing and retainer are clean and free from burrs, otherwise bearing life will be shortened.

104 Mainshaft

a. Place the mainshaft in a press, and with a suitable tool press the front bearing cone onto the shaft, until the thick end of the bearing seats firmly against the shoulder.
b. Turn the shaft over and insert the gear key into the shaft.
c. Press the Hi-range gear onto the shaft (hub of gear towards the rear of the shaft) until the gear seats firmly against the shaft shoulder.
d. Press the rear bearing cone onto the shaft until the thick end of the bearing seats firmly against the gear hub. Install the rear bearing nut and using tool J-24560 torque to 1085 – 1628 Nm (800 – 1200 lb.ft).

105 Countershaft

a. Assemble the rear bearing, spacer and front bearing into the Lo-range gear, then install the Lo-range gear assembly onto the countershaft (gear clutch teeth towards the sliding clutch teeth of the shaft).
b. Install the main drive gear split thrust washers into the groove in the shaft, then press the thrust washer ring over the split thrust washers.
c. Install the main drive gear onto the shaft splines, with the hub of the gear towards the Lo-range gear.
d. Press the front bearing onto the countershaft until the thick end of the bearing seats firmly against the main drive gear.
e. Install the front bearing clamp plate and retaining bolt and torque the bolt to 720 – 773 Nm (530 – 570 lb.ft).
f. Turn the countershaft over and install the Hi-Lo range sliding clutch onto the shaft.
g. Assemble the front bearing, spacer and rear bearing into the Hi-range gear, then install the Hi-range gear onto the rear of the shaft (gear clutch teeth towards the sliding clutch).
h. Insert the rear bearing spacer lock pin in the hole provided in the shaft, then slide the spacer over the lock pin.
i. Press the countershaft rear bearing onto the shaft until the thick end of the bearing seats firmly against the spacer. At this time check that the Hi-range gear and Lo-range gear end-play is 0.203 – 0.457 mm (0.008 – 0.018 in.).

106 Main Drive Shaft

a. Place the main drive shaft in the press, and with the aid of a suitable tool press the rear bearing onto the shaft until the thick end of the bearing seats firmly against the shaft shoulder.

107 Front Output Shaft

a. Place the front output shaft in the press. Press the rear bearing onto the shaft until the thick end of the bearing seats firmly against the gear.
b. In a like manner install the front bearing onto the shaft.
c. Install the front bearing spacer and the speedometer drive worm on the front end of the shaft.

108 Rear Drive Shaft

a. Place the rear drive shaft bearing retainer in a press, and with a suitable tool, press the inner bearing cup into the retainer until the thick end of the cup seats firmly against the centred internal flange.
b. Turn the retainer over and in the same manner press the outer bearing cup into the retainer, then remove the retainer from the press.
c. Place the rear drive shaft in the press, and with a suitable tool, press the front drive shaft rear spigot bush into the spigot end of the rear drive shaft.
d. Turn the rear drive shaft over and press the inner bearing cone onto the shaft until the thick end of the bearing seats firmly against the shaft shoulder.
e. Slide the selective bearing spacer onto the shaft. Place the bearing retainer assembly on the rear drive shaft and seat the inner bearing cup on the inner bearing cone, then press the outer bearing cone onto the shaft.
f. With the rear drive shaft assembly still in the press, establish the bearing end-play as follows: with the tubular tool seated against the outer bearing cone, apply a load of 2273 kg (5000 lb). Using a dial indicator check that the end-play is between 0.178 – 0.254 mm (0.007 – 0.010 in.) (see fig. 242). If the end-play is not within these limits, use a thinner spacer to decrease or a thicker spacer to increase the end-play.
g. Remove the retainer assembly from the press and install a new O-ring in the groove provided in the outside hub of the retainer.

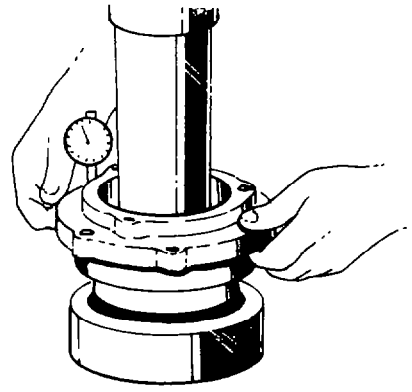

Fig. 242 — Measuring End Play — Rear Drive Shaft

109 Front Drive Shaft Bearing Retainer

a. Place the front drive shaft bearing retainer in the press and using a suitable tool, press the inner bearing cup into the retainer until the thick end of the cup is firmly seated against the internal flange.

b. Turn the retainer over and in the same manner press the outer bearing cup into the retainer.

c. Check the bearing end-play by inserting the inner and outer bearing cones with the selective bearing spacer into the retainer. Place the retainer assembly in the press with a suitable tool seated against the bearing cone. Apply a load of 2273 kg (5000 lb) and with a dial indicator check that the end-play is within 0.178 – 0.254 mm (0.007 – 0.010 in.) (see fig. 243). If the end-play is not within these limits, use a thinner spacer to decrease or a thicker spacer to increase the end play.

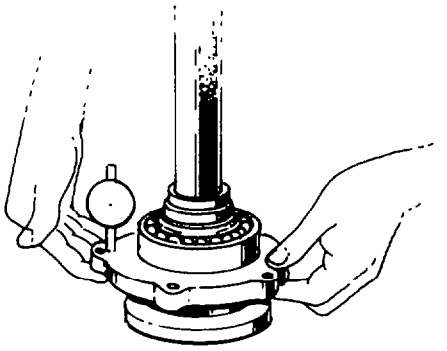

Fig. 243 — Measuring End Play — Front Drive Shaft

110 Main Components

a. Position the transfer case vertically (rear of case facing up), and install the main drive shaft gear in the case.

b. Turn the case 180 degrees (front of case facing up), install the stud guides, then install the main drive shaft bearing retainer. Remove the stud guides and install the retainer bolts and torque to 61 – 88 Nm (45 – 65 lb.ft).

c. Turn the transfer case 180 degrees (rear of case facing up). Place the spacer washer on the drive shaft gear face then install the drive shaft through the spacer and gear until the rear bearing cone seats in the cup.

d. Position the transfer case horizontally and install the drive shaft selective bearing spacer and the front bearing cone on the front end of the drive shaft.

e. Install a soft iron wedge between the drive shaft gear and the transfer case. Using tool J-24560, install and torque the drive shaft front bearing nut (left-hand thread) to 1085 – 1628 Nm (800 – 1200 lb.ft).

f. Position the transfer case vertically (rear of case facing up), then using a dial indicator, check that the drive shaft end play is between 0.178 – 0.254 mm (0.007 – 0.010 in.) (see fig. 244). If the end-play is not within these limits, use a thinner selective bearing spacer to decrease or a thicker selective bearing spacer to increase the end play.

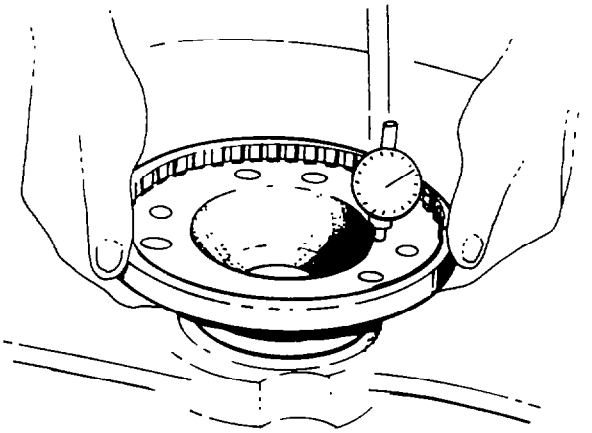

Fig. 244 — Measuring End Play — Drive Shaft

NOTE: When the correct drive shaft bearing end-play is established, turn the transfer case to the horizontal position and stake the lip of the drive shaft front bearing nut to the shaft.

g. Turn the transfer case so that the front of the case faces up, and install the mainshaft and countershaft front bearing cover and gasket (see fig. 245). Install the retaining bolts and torque to 61 – 88 Nm (45 – 65 lb.ft).

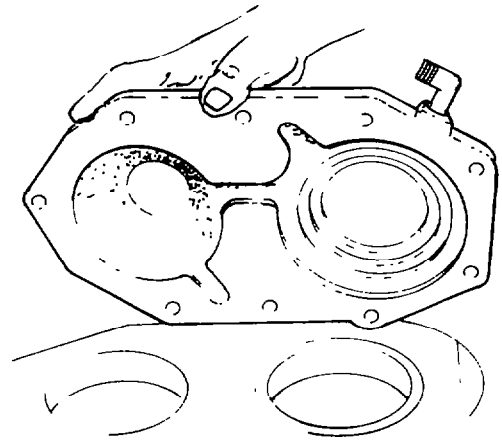

Fig. 245 — Installing Mainshaft and Countershaft Bearing Cover

NOTE: If the mainshaft and/or countershaft bearing is to be replaced, it must be installed before the mainshaft and/or countershaft is installed. The bearing cup(s) can be positioned to the correct depth by installing the front bearing cover and gasket over the bearing cup(s) and pressing the cup(s) into the case with the cover, until the cover and gasket seat against the transfer case.

h. Turn the transfer case 180 degrees (rear of case facing up), using suitable lifting equipment install the countershaft assembly in the case (see fig. 246), then install the countershaft rear bearing clamp plate and retaining bolt (left-hand thread). Torque the retaining bolt to 720 – 773 Nm (530 – 570 lb.ft).

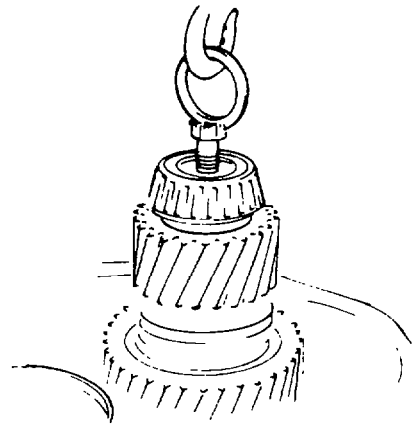

Fig. 246 — Installing Countershaft Assembly

i. Engage the Hi-Lo range selector fork in the groove provided in the Hi-Lo range sliding clutch (see fig. 247).

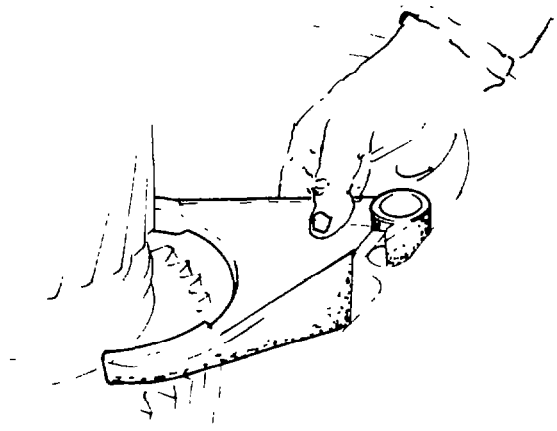

Fig. 247 — Installing Hi-Lo Range Selector Fork

j. Turn the transfer case to the horizontal position. Start the selector shaft in the hole provided in the front of the case. Advance the shaft through the hub of the fork, then install the fork locating screws and torque to 47 – 61 Nm (35 – 45 lb.ft) (see fig. 248).

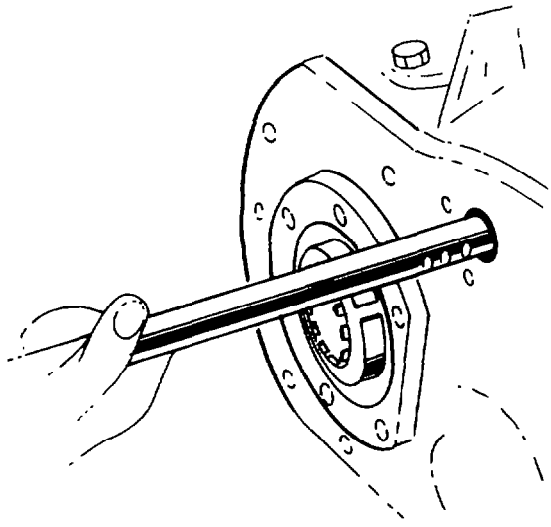

Fig. 248 — Installing Selector Shaft

k. Install the selector fork detent ball, spring, and retaining bolt in the hole provided at the right-hand mounting pad (see fig. 249).

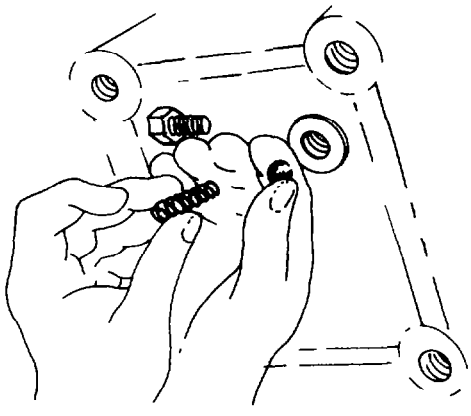

Fig. 249 — Installing Detent Ball

l. Turn the transfer case to the vertical position with the rear of the case facing up and install the mainshaft assembly (see fig. 250).

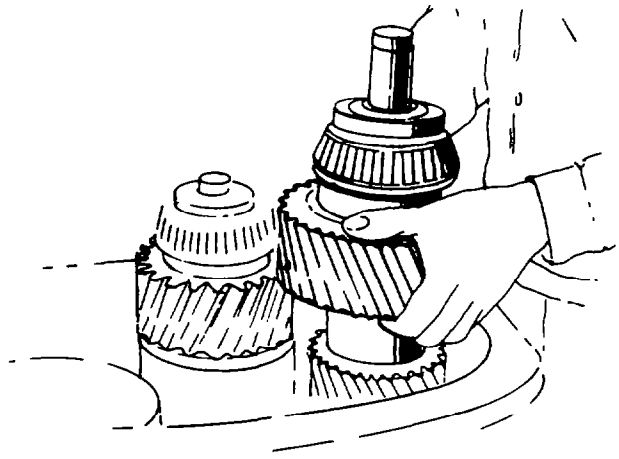

Fig. 250 — Installing Mainshaft Assembly

m. Place a soft iron wedge between the countershaft and mainshaft gears. Using tool J-24560 torque the mainshaft rear bearing nut to 1085 – 1628 Nm (800 – 1200 lb.ft), then remove the soft iron wedge.

n. Install the front drive shaft in the inner bore of the main drive shaft (see fig. 251).

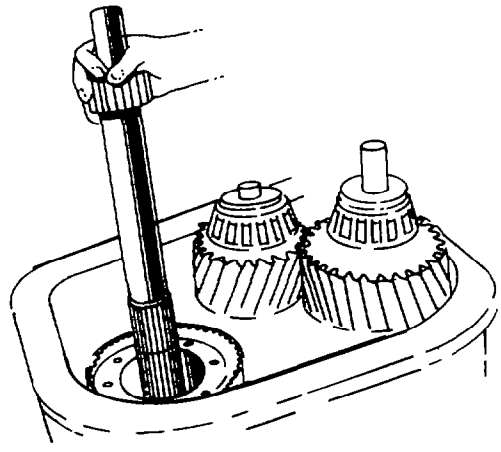

Fig. 251 — Installing Front Drive Shaft

o. Align the planet cage retaining bolt holes with the main drive shaft bolt holes, then mesh the planet cage external splines with the main drive shaft internal splines. Install the retaining bolts and torque to 75 – 100 Nm (55 – 75 lb.ft), then install the planet gears (see fig. 252).

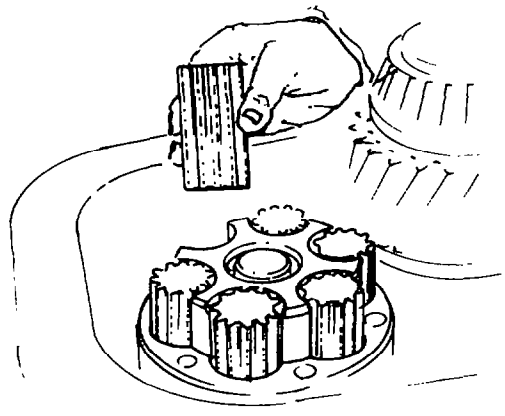

Fig. 252 — Installing Planetary Gears

p. Install a new rear end-plate to transfer case gasket, then with suitable lifting equipment, install the end-plate (see fig. 253). Install the retaining bolts and torque the bolts to 129 – 170 Nm (95 – 125 lb.ft) and the nuts to 75 – 100 Nm (55 – 75 lb.ft).

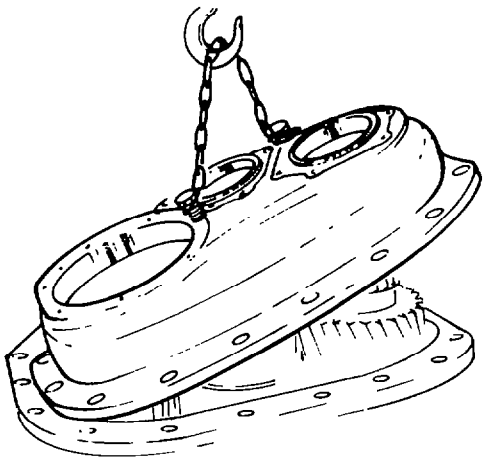

Fig. 253 — Installing End-Plate

q. Install the countershaft rear bearing cover and adjusting shims. Then install the retaining bolts and torque to 61 – 88 Nm (45 – 65 lb.ft) (see fig. 254).

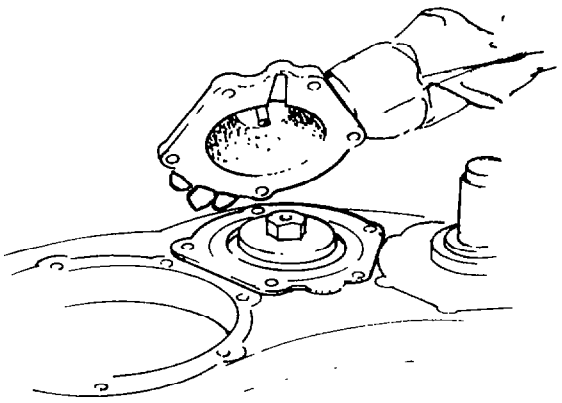

Fig. 254 — Installing Countershaft Rear Bearing Cover

r. Check the countershaft bearing end-play by removing the oil line elbow from the rear bearing cover and inserting a dial indicator into the hole. Position the dial indicator so that the spindle makes contact with the clamp plate retaining bolt. Using a pry bar through the rear drive shaft retainer opening, move the countershaft up and down and check that the reading on the dial indicator is within 0.178 – 0.254 mm (0.007 – 0.010 in.). If the end-play is not within these limits, add a shim to increase or remove a shim to decrease the end-play. Remove the dial indicator and install the oil line elbow in the countershaft rear bearing cover.

s. With suitable lifting equipment carefully install the rear drive shaft assembly. Install the rear drive shaft retaining bolts and torque to 61 – 88 Nm (45 – 65 lb.ft).

t. Install the rear drive shaft cover assembly, torque the retaining bolts to 24 – 38 Nm (18 – 28 lb.ft).

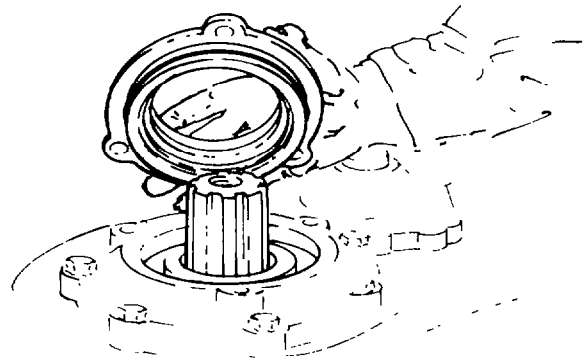

Fig. 255 — Installing Rear Drive Shaft Cover Assembly

u. Install the rear drive shaft yoke, clamp plate and retaining bolt. Torque the retaining bolt to 720 – 773 Nm (530 – 570 lb.ft).

v. If the mainshaft bearings were replaced, install and seat the new mainshaft rear bearing cup in the end-plate bearing bore. Position the adjusting shims over the rear end of the mainshaft and on the rear end-plate.

w. Install the mainshaft rear bearing cover and gasket, torque the retaining bolts to 24 – 38 Nm (18 – 28 lb.ft).

x. Turn the transfer case 180 degrees (front of case facing up), and install the mainshaft front drive yoke, clamp plate and retaining bolt. Torque the retaining bolt (left-hand thread) to 720 – 773 Nm (530 – 570 lb.ft).

y. Install a dial indicator so that the spindle contacts the mainshaft drive yoke retaining bolt. Check that the mainshaft bearing end-play is within 0.178 – 0.254 mm (0.007 – 0.010 in.) (see fig. 256). If the end-play is not within these limits, add shims to increase or remove shim to decrease end-play. (Shims are located between the rear end-plate and the rear bearing cover.)

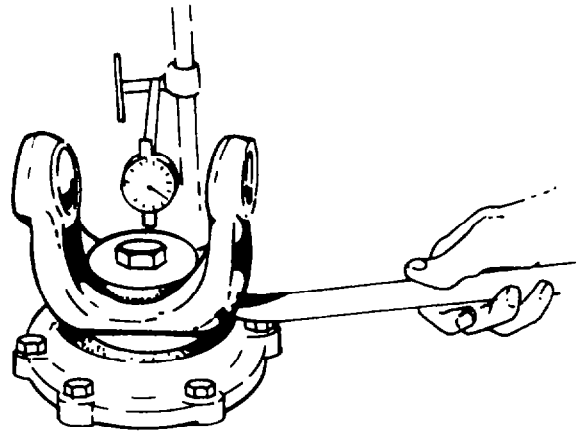

Fig. 256 — Measuring Mainshaft Bearing End-Play

z. Install the front drive housing (see fig. 257), torque the bolts to 130 – 170 Nm (95 – 125 lb.ft) and the nuts to 75 – 100 Nm (55 – 75 lb.ft).

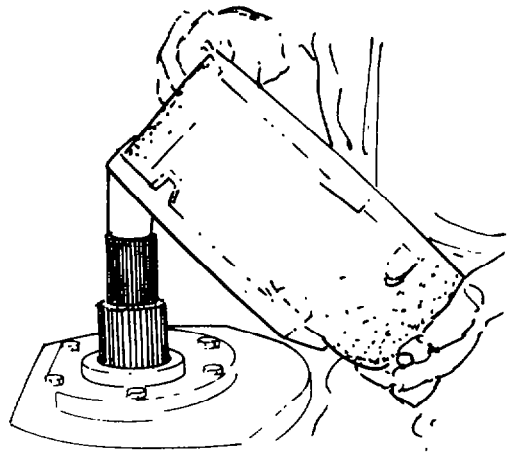

Fig. 257 — Installing Front Drive Housing

aa. Install the front drive sliding clutch on the front drive shaft (clutch teeth towards the front) (see fig. 258).

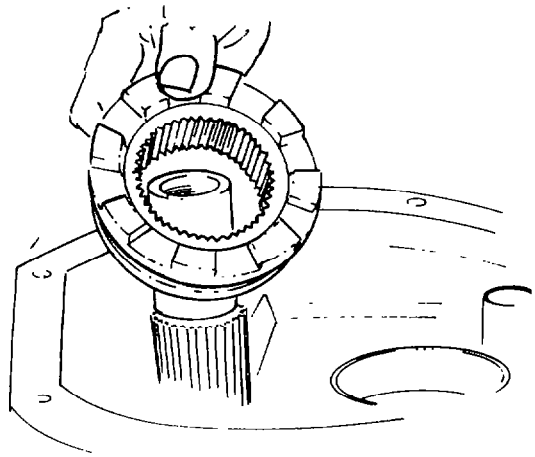

Fig. 258 — Installing Front Drive Sliding Clutch

ab. Position the gasket on the front drive selector assembly. Install the selector assembly, engaging the selector fork in the groove provided in the front drive sliding clutch (see fig. 259). Install the selector assembly retaining bolts and torque to 14 – 20 Nm (10 – 15 lb.ft).

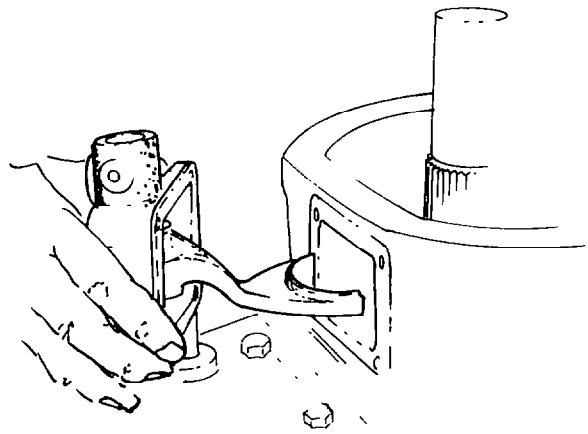

Fig. 259 — Installing Selector Assembly

ac. Install the front drive gear onto the front drive shaft (teeth towards the rear) (see fig. 260).

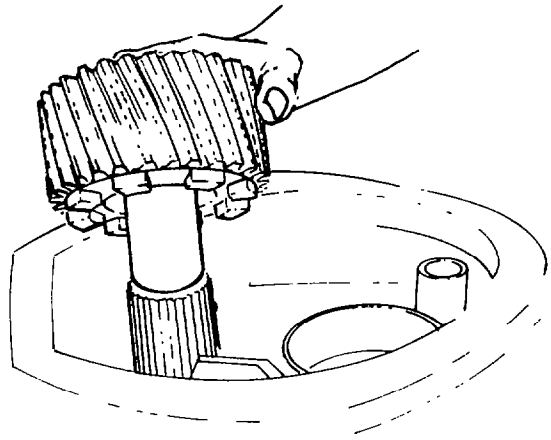

Fig. 260 — Installing Front Drive Gear

ad. Install the front drive shaft inner bearing cone (see fig. 261), and selective bearing spacer on the shaft.

NOTE: The correct bearing spacer thickness was obtained during the reassembly of the front drive shaft bearing retainer.

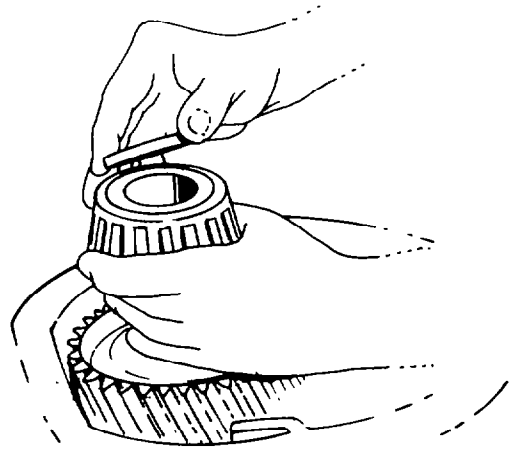

Fig. 261 — Installing the Bearing Cone and Spacer

ae. Install the front driving shaft assembly (see fig. 262).

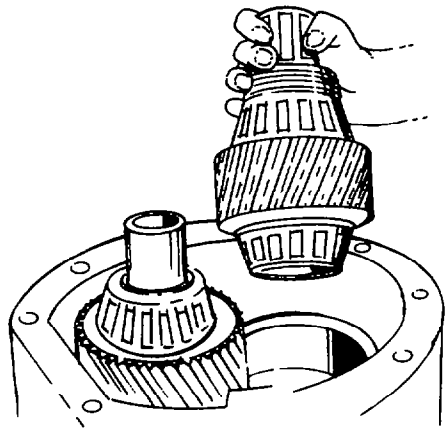

Fig. 262 — Installing Front Driving Shaft Assembly

af. Install a new front drive shaft bearing retainer to end-plate gasket, then place the end-plate in a press and install the front drive shaft bearing retainer assembly into the end-plate.

ag. Carefully install the end-plate assembly onto the front drive housing (see fig. 263). Install the front drive shaft outer bearing cone into the retainer, and install the end-plate retaining bolts. Torque the bolts to 61 – 88 Nm (45 – 65 lb.ft), and the nuts to 75 – 100 Nm (55 – 75 lb.ft).

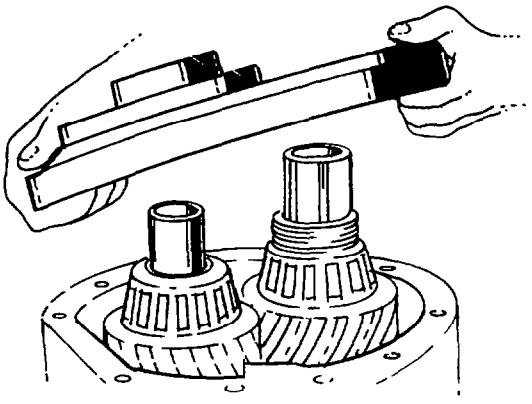

Fig. 263 — Installing End-Plate Assembly

ah. Install the front drive shaft bearing clamp plate and retaining bolt (see fig. 264). Torque the retaining bolt to 720 – 773 Nm (530 – 570 lb.ft).

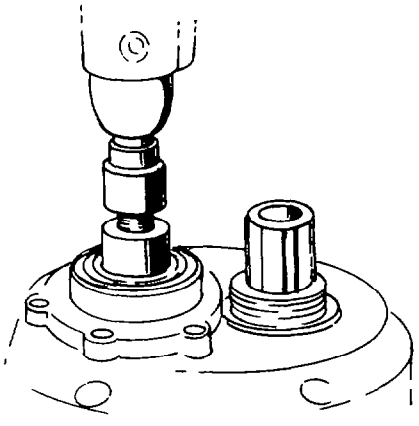

Fig. 264 — Installing Clamp Plate

ai. Install a new front drive shaft bearing retainer to bearing cover gasket, then install the bearing cover with retaining bolts. Torque the bolts to 40 – 55 Nm (30 – 40 lb.ft) (see fig. 265).

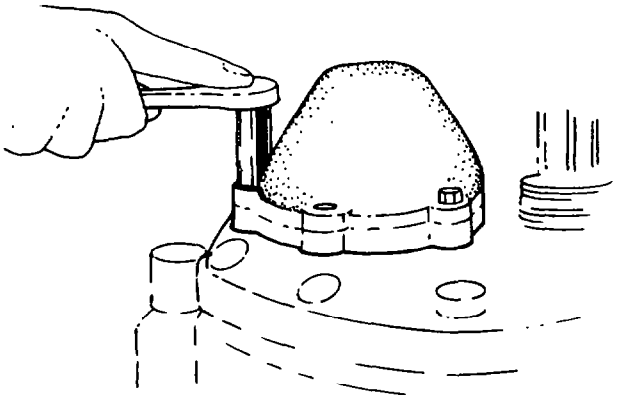

Fig. 265 — Installing Front Drive Shaft Bearing Cover

aj. Install the front output shaft adjusting shims and bearing cover (see fig. 266).

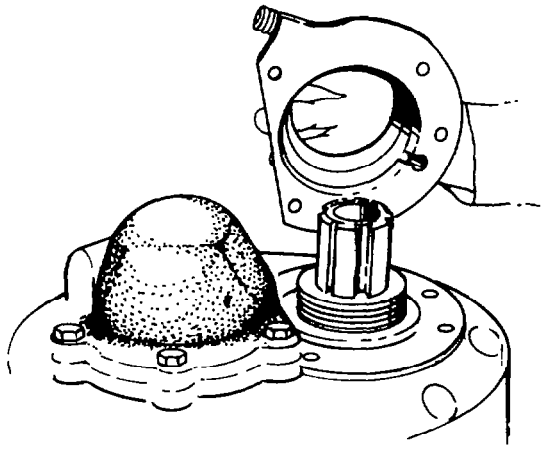

Fig. 266 — Installing Front Output Shaft Bearing Cover

ak. Install the front output shaft drive yoke, the drive yoke clamp plate and retaining bolt, torque the retaining bolt to 720 – 773 Nm (530 – 570 lb.ft).

al. At this point check the front output shaft end-play. Using a dial indicator, check for 0.178 – 0.254 mm (0.007 – 0.010 in.) bearing end-play. If the end-play is not within these limits, add a shim to increase or remove a shim to decrease the end-play (see fig. 267).

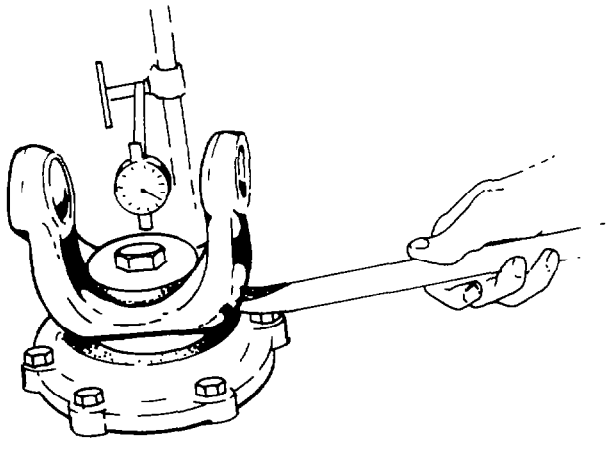

Fig. 267 — Measuring Front Output Shaft End-Play

am. Install the transfer case oil line.

an. Recheck all retaining bolts for correct torque then remove the transfer case from the stand.

ao. Refill the transfer case with 9.5 litres (2.088 gal.) of fresh OEP-220 oil.

ap. Install the transfer case (refer to EMEI VEH G 704 — Group 7).

aq. Road test the truck, and check the operation of the transfer case.

RESERVED

# GROUP 9 — REAR AXLE

## DIFFERENTIAL OVERHAUL

111 Where parts have heavy press fits, it is advisable not to disturb these parts unless replacement is necessary. When disassembly is necessary use proper press setups and/or pullers so that usable parts are not damaged during removal.

> *CAUTION:*
> *Where heavy torques are encountered, such as the drive yoke retaining bolts and the nut retaining the power divider outer cam to the bevel pinion, it is advisable to use a one inch drive, heavy-duty air impact wrench. Conventional methods of relieving or tightening these heavy torques require some means of holding the pinions to resist rotation. Unless proper precautions are taken, this can be a very dangerous operation*

NOTE: If the gear jamming method is used, a tool made from 1/2 inch diameter mild steel rod approx. 2 inches long with 1/4 or 3/8 inch dia. rod 2 feet long welded to it can be used. This gear jamming tool can then be held safely by one person, while another pulls on the wrench.

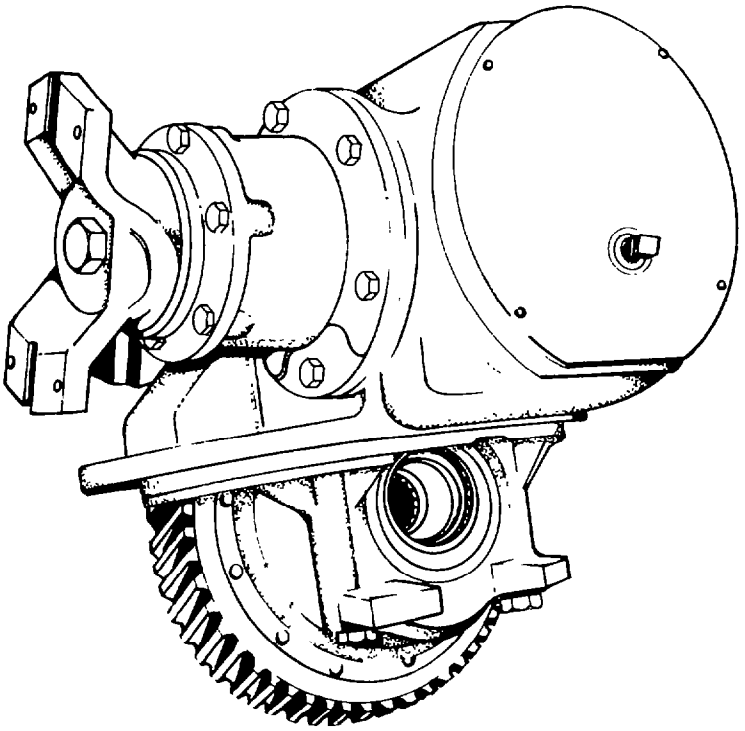

Fig. 268 — Rear Axle Carrier

112 Overhaul Procedures

a. Remove the axle assembly (refer EMEI VEH G 704 — Group 9).
b. Install the axle assembly on a suitable overhaul cradle.
c. Drain the lubricant from the axle assembly.
d. Remove the axle shafts.
e. Remove the bolts and nuts retaining the carrier to the axle housing.
f. Install suitable lifting equipment and lift the carrier assembly clear of the axle housing.
g. Install the carrier assembly on a suitable overhaul stand.

113 Bevel Pinion Shaft Assembly (Intermediate Carrier)

a. Remove the four retaining bolts from the carrier side cover and remove the cover.
b. Insert a soft iron (mild steel) gear jamming tool between the bevel pinion and bevel gear and remove the drive yoke retaining bolt and clamp plate.
c. Pry the drive yoke from the bevel pinion shaft using suitable levers.
d. Remove the bearing retainer from the lockout bearing by inserting two 7/16 inch — 14 UNC bolts into the threaded holes in the bearing retainer and screwing the bolts in evenly and alternately (see fig. 269).

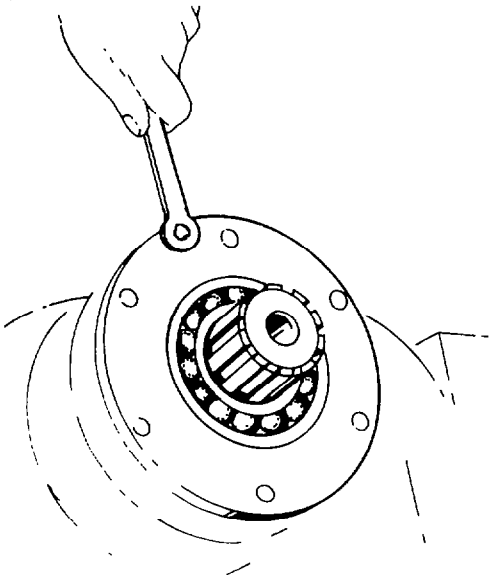

Fig. 269 — Removing Retainer Cover Bolts

e. Remove the cover from the inter-axle power divider lockout, cut the lockwire and unscrew the lockout selector fork locating screw.
f. Remove the air cylinder and withdraw the piston shaft from the selector fork.
g. Remove the bolts retaining the power divider lockout housing to the bevel pinion housing and remove the lockout housing and the selector fork.
h. Using a hammer and a suitable drift, remove the bearing from the housing.
i. Remove the sliding clutch from the power divider cage, then remove the power divider cage from the outer cam (see fig. 270).

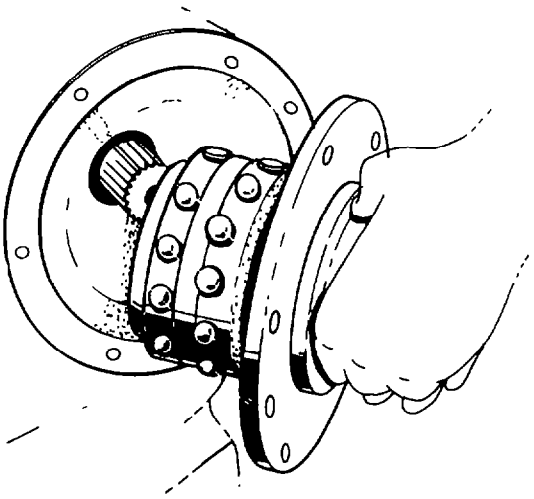

Fig. 270 — Removing Power Divider Cage

j. Install the gear-jamming tool between the bevel pinion and the bevel gear and with an air driven impact wrench loosen the power divider outer cam nut.

k. Remove the bolts and lockwashers retaining the bevel pinion housing to the carrier housing (see fig. 271).

NOTE: Install two aligning pins in the two and ten o'clock positions before removing all of the retaining bolts. This prevents damaging the shim pack when the housing assembly is removed.

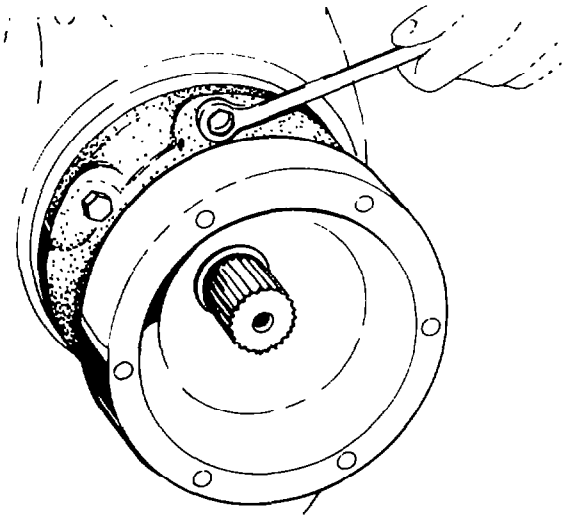

Fig. 271 — Removing Bevel Pinion Housing Bolts

l. Using two 5/8 in. — 11 UNC bolts, remove the bevel pinion housing (see fig. 272) by inserting the bolts in the threaded holes in the pinion housing and turning the bolts evenly and alternately. Wire the shims together and tag for re-use at reassembly.

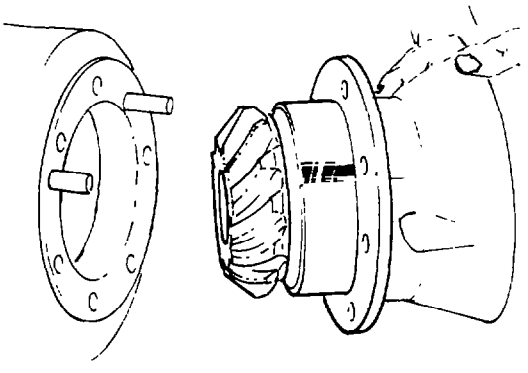

Fig. 272 — Removing Bevel Pinion Housing

m. Remove the rear bearing cover retaining bolts and remove the bearing cover by inserting two 3/8 in. — 16 UNC bolts in the threaded holes in the bearing cover and turning the bolts evenly and alternately (see fig. 273).

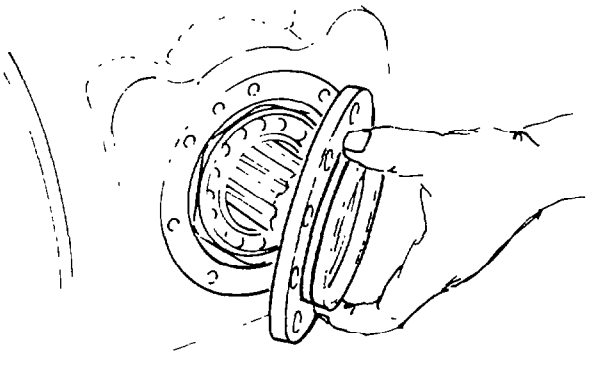

Fig. 273 — Removing Rear Bearing Cover

n. Remove the through shaft and bearing assembly from the retainer assembly (see fig. 274).

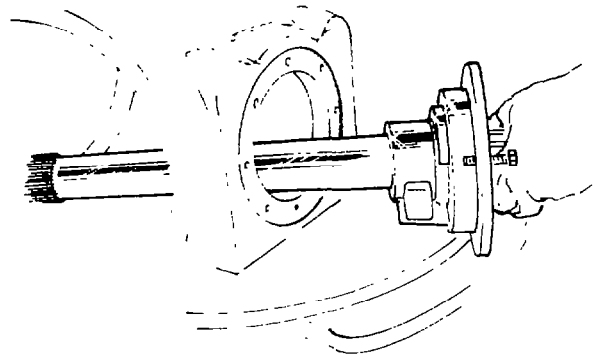

Fig. 274 — Removing Through Shaft and Bearing Assembly

o. Remove the outer cam from the bevel pinion housing.
p. Press the bevel pinion from the housing using a hydraulic press and remove the bevel pinion spacers (see figs. 275 and 276).

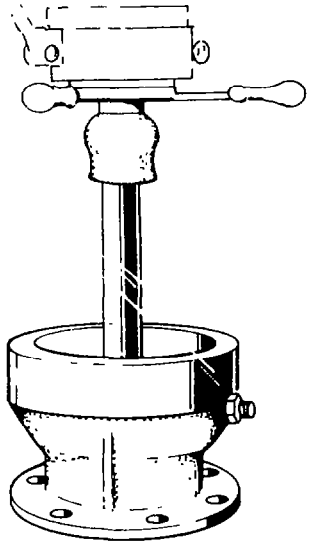

Fig. 275 — Removing Bevel Pinion

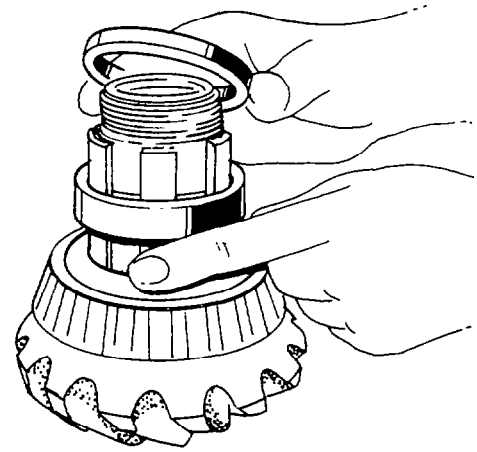

Fig. 276 — Removing Bevel Pinion Spacers

q. Use a drift and hammer to remove the bearing cups from the bevel pinion housing (see figs. 277 and 278).

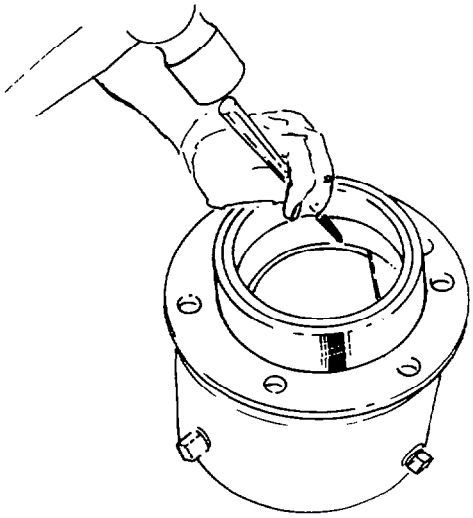

Fig. 277 — Removing Rear Bearing Cup

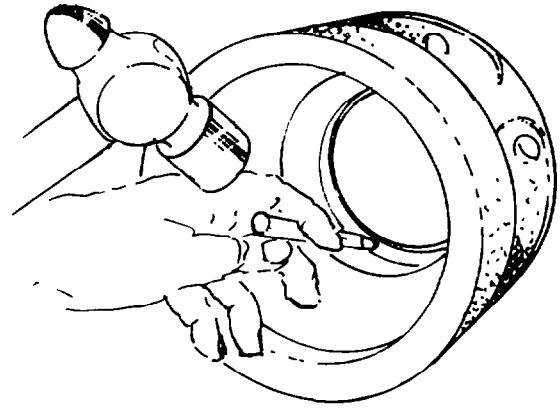

Fig. 278 — Removing Front Bearing Cup

r. Remove the bearing cone from the outer cam, using a hydraulic press and the necessary segments and adapter rings (see fig. 279).

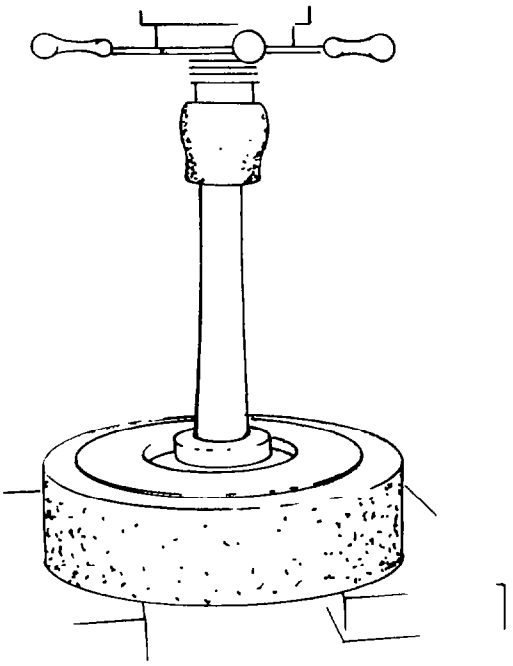

Fig. 279 — Removing Bearing Cone

114 Bevel Pinion Shaft Assembly (Rear Carrier)

a. Remove the retaining bolts from the carrier side cover and remove the cover (see fig. 280).

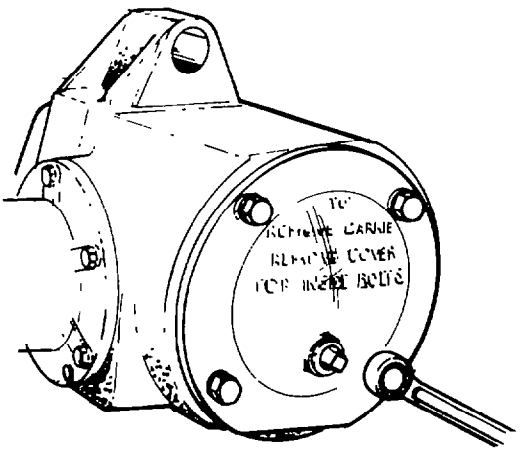

Fig. 280 — Removing Carrier Side Cover Bolts

b. Lock the bevel pinion by placing a gear jamming tool between the bevel pinion and the bevel gear, then remove the retaining bolt and clamp plate from the drive yoke.
c. Pry the drive yoke from the bevel pinion shaft using suitable levers.
d. Remove the bolts and lockwashers retaining the bevel pinion housing assembly to the carrier housing.

NOTE: Install two aligning pins in the two and ten o'clock positions before removing all of the retaining bolts. This prevents damaging the shim pack when the housing is removed.

e. Using two 5/8 in. — 11 UNC bolts, remove the bevel pinion housing assembly by inserting the bolts in the threaded holes in the pinion housing and turning the bolts evenly and alternately. Wire the shims together and tag for reuse at reassembly.

f. Place the bevel pinion housing on a work bench and remove the bearing retainer cover and gasket (see fig. 281).

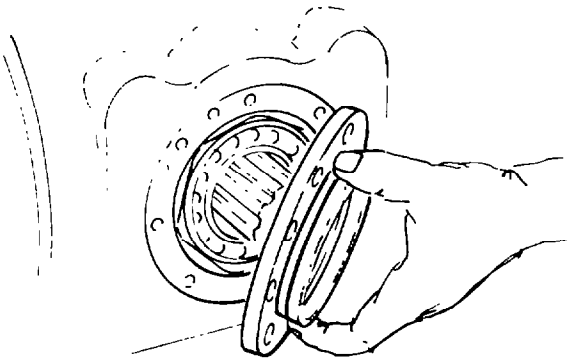

Fig. 281 — Removing Bearing Retainer Cover

g. Drive the seal from the bearing retainer cover.

h. Lift the housing assembly clear of the bevel pinion shaft (see fig. 282) and remove the front bearing cone from the housing assembly.

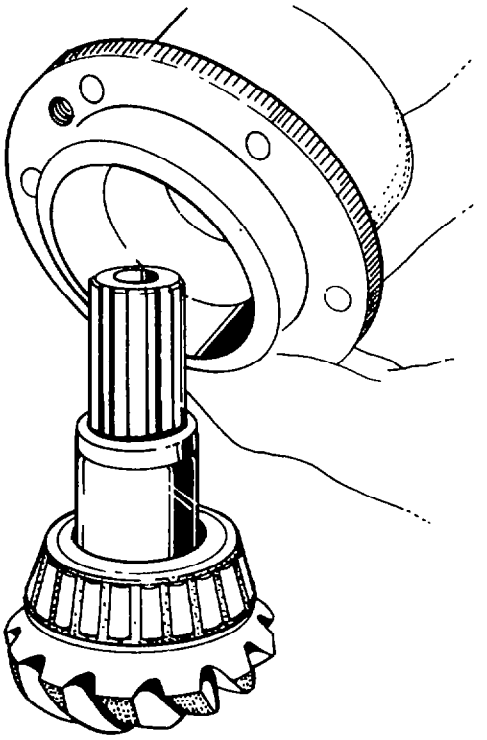

Fig. 282 — Removing Pinion Shaft Housing Assembly

i. Use a drift and hammer to remove the bearing cups from the bevel pinion housing.
j. Remove the spacer from the bevel pinion shaft (see fig. 283).

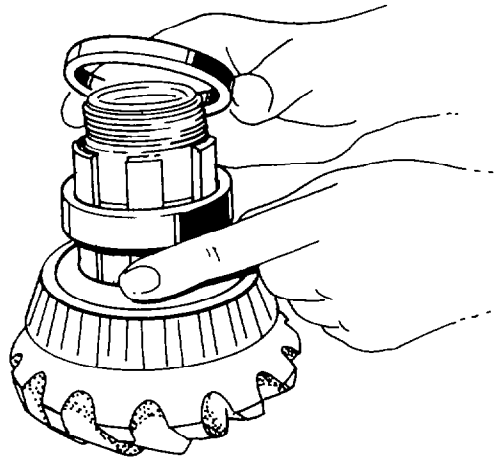

Fig. 283 — Removing Bevel Pinion Spacers

k. Remove the rear bearing cone from the bevel pinion shaft, using a hydraulic press and the necessary segments and adapter rings (see fig. 284).

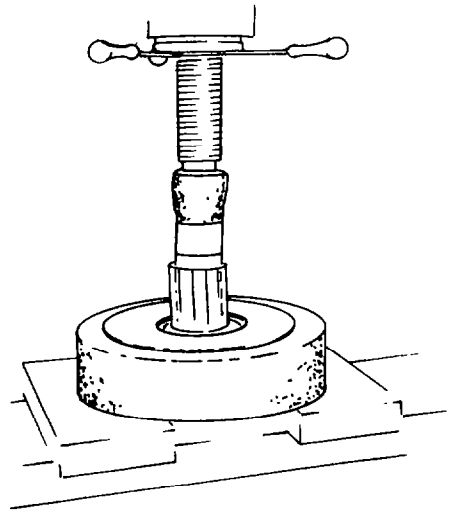

Fig. 284 — Removing Bearing Cone

115 Helical Pinion Shaft

a. Remove the helical pinion shaft cover retaining bolts and remove the cover.
b. Remove the clamp plate retaining bolts and remove the clamp plate from the pinion shaft (see fig. 285).

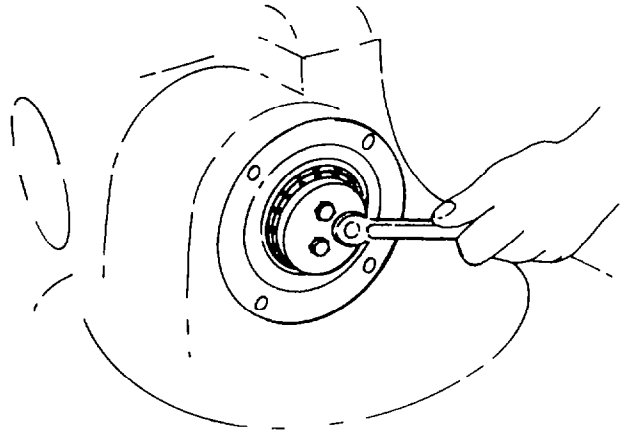

Fig. 285 — Removing Clamp Plate Retaining Bolts

c. Place a block of wood in the carrier housing to support the pinion shaft assembly, then install 1/2 in. — 13 UNC bolts into the threaded holes in the bearing retainer and turn the bolts evenly and alternately until the bearing retainer is free from the carrier housing (see fig. 286).

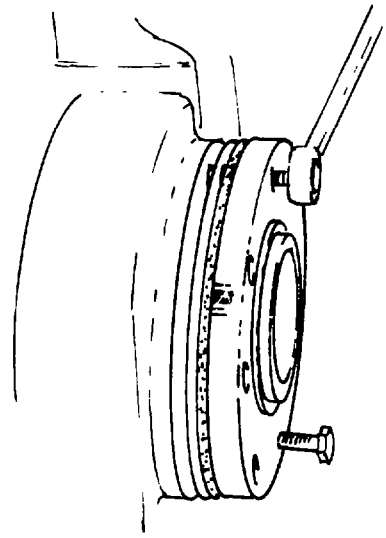

Fig. 286 — Removing Bearing Retainer

d. Remove the bearing cone and the shim pack. Wire the shims together and tag for use at reassembly.
e. Press the bearing cup from the bearing retainer (see fig. 287).

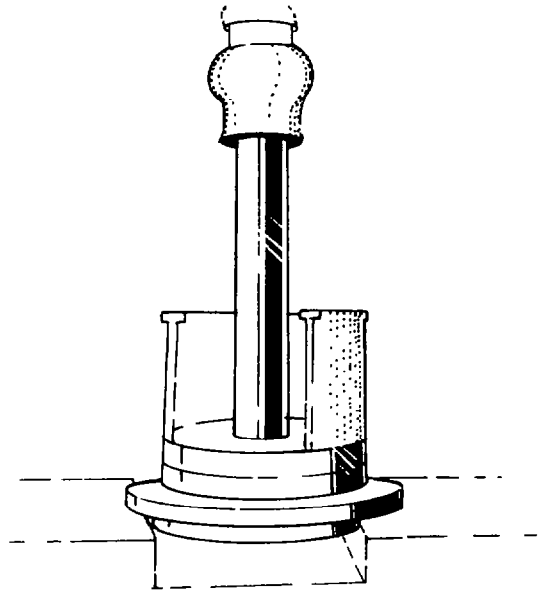

Fig. 287 — Removing Bearing Cup

f. Remove the O-ring from the retainer housing, and use pliers to remove the locating pin from the end of the housing.
g. Remove the pinion shaft bearing cup located in the carrier housing, using a suitable drift and hammer (see fig. 288).

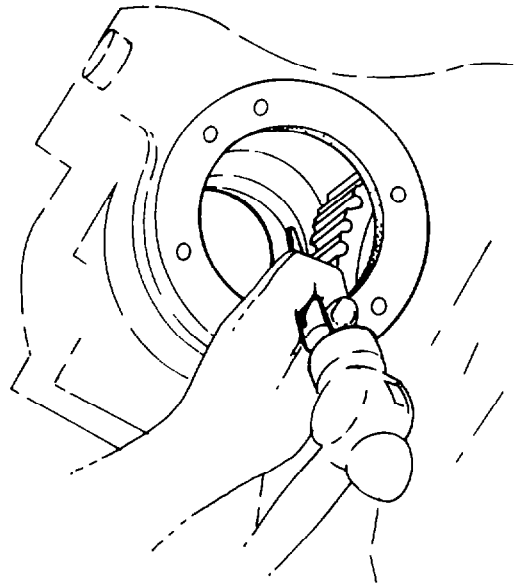

Fig. 288 — Removing Pinion Shaft Bearing Cup

h. Install the pinion shaft in the press and press the pinion gear from the shaft, then remove the key from the shaft.
i. Install the bearing cup (previously removed from carrier housing, para. g.) onto the pinion shaft bearing cone, then press the bearing assembly from the pinion shaft (see fig. 289).

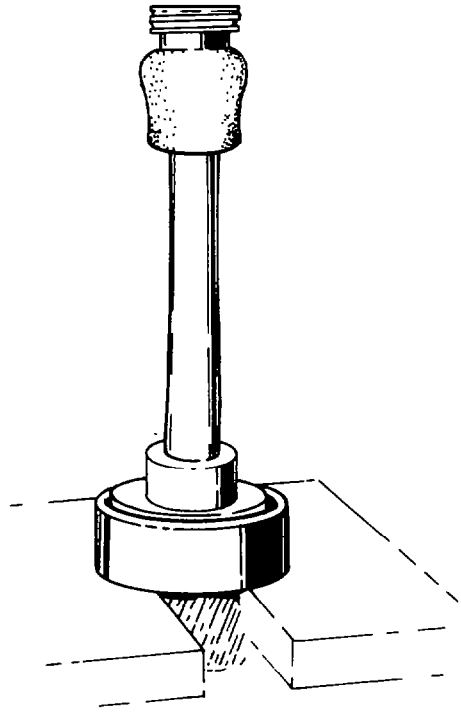

Fig. 289 — Removing Bearing Assembly

116 Inter-wheel Power Divider Differential

a. Rotate the carrier housing so that the differential is on top.

b. Punch mark the bearing caps and their mating pedestals to ensure reassembly in their original position.

c. Remove the split pin and the straight pin locking the bearing adjusting nut (see fig. 290 and 291).

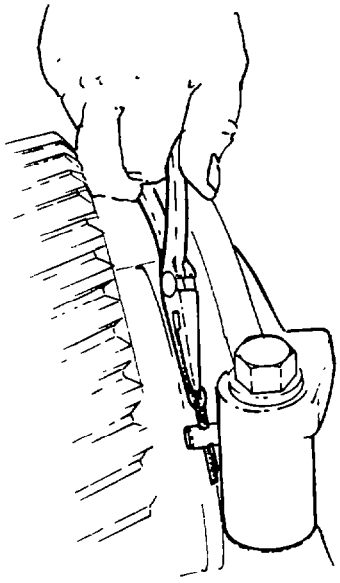

Fig. 290 — Removing Split Pin

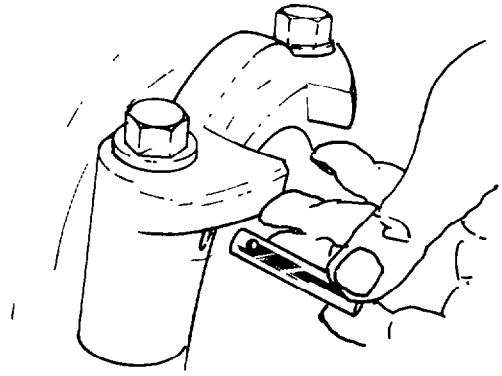

Fig. 291 — Removing Locking Pin

d. Loosen the bearing adjusting nut approximately one turn, using a differential bearing nut adjusting spanner J-26437 (see fig. 292).

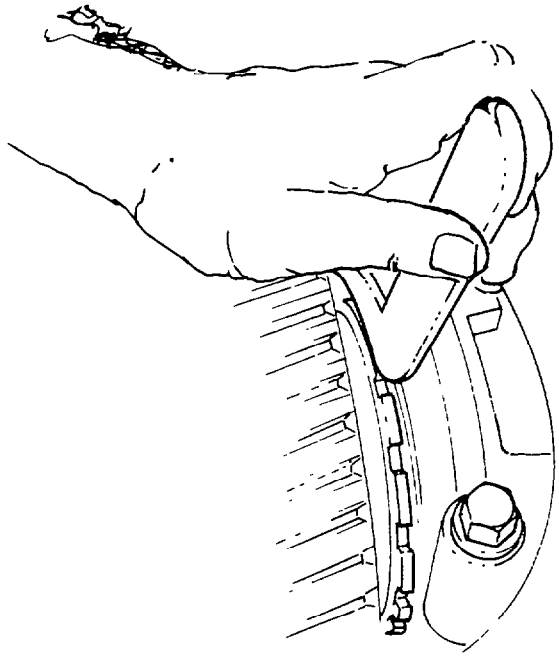

Fig. 292 — Loosening Adjusting Nut

e. Remove the bearing cap retaining bolts, then remove the bearing caps (see fig. 293).

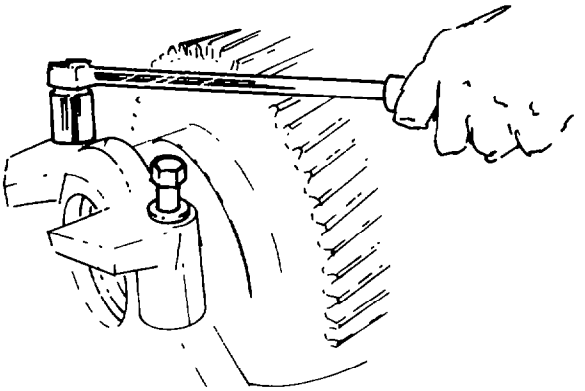

Fig. 293 — Removing Bearing Cap Retaining Bolts

f. Remove the differential assembly from the carrier housing for disassembly on a workbench.
g. Remove the bearing cups from the differential assembly and remove the bearing adjusting nut from the bearing cup (see fig. 294).

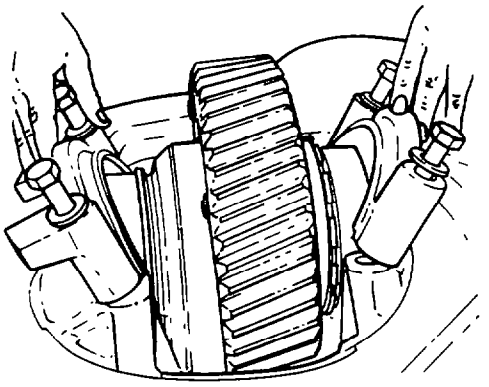

Fig. 294 — Removing Bearing Cup

h. Mark the bull gear, side casing and driving cage to ensure reassembly in the same position.

NOTE: The bull gear, side casing and driving cage of the differential assembly are line reamed together to make a matched assembly.

i. Cut and remove the lockwire from the retaining bolts, then remove the retaining bolts. Using a brass drift and hammer, tap around the circumference of the bull gear until the bull gear separates from the driving cage (see fig. 295).

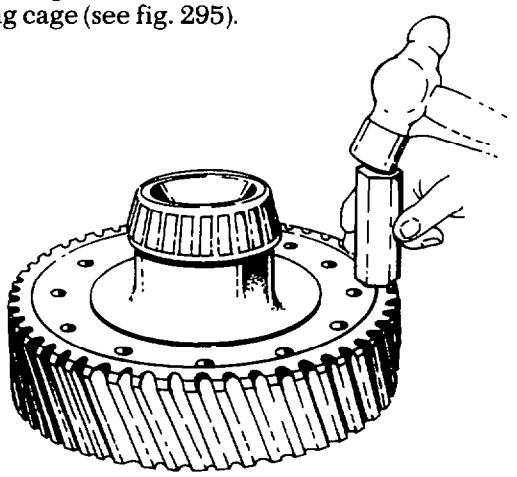

Fig. 295 — Separating Bull Gear and Driving Gear

j. Remove the outer cam from the cage (see fig. 296).

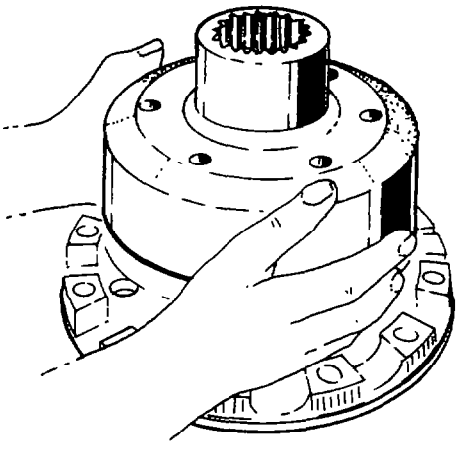

Fig. 296 — Removing Outer Cam

k. Rotate the inner cam so that all the wedges are fully extended, then remove the inner cam (see fig. 297).

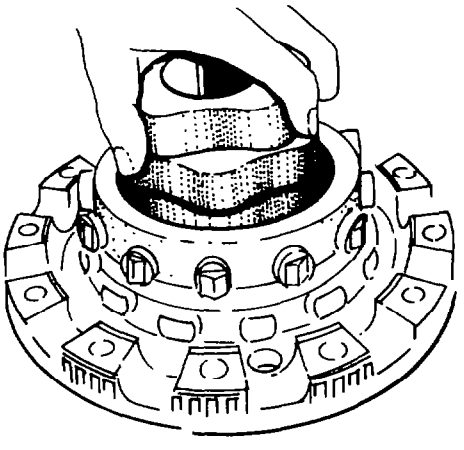

Fig. 297 — Removing Inner Cam

l. Remove the upper set of twelve wedges from the driving cage, then remove the retaining ring and the lower set of twelve wedges.
m. Remove the bush from the power divider driving cage.

117 Inter-Axle Power Divider Cage

a. Push all the wedges out, away from the inner cam lobes, then remove the inner cam (see fig. 298).

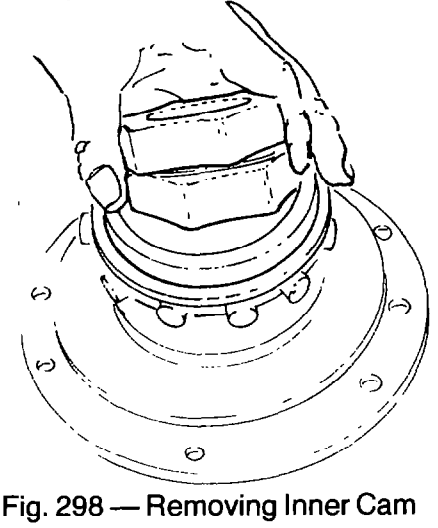

Fig. 298 — Removing Inner Cam

b. Using two screwdrivers, remove the inner retaining ring from the power divider cage (see fig. 299).

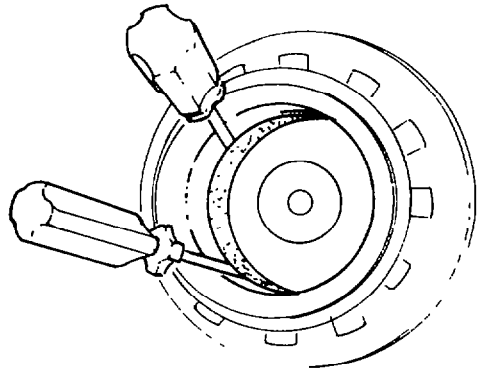

Fig. 299 — Removing Inner Retaining Ring

c. Push all the upper wedges in as far as possible, then remove the outer retaining ring using ring expansion pliers (see fig. 300).

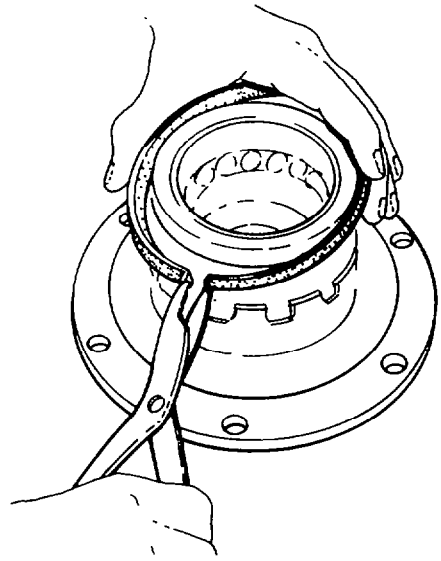

Fig. 300 — Removing Outer Retaining Ring

d. Remove all the wedges from the driving cage (see fig. 301).

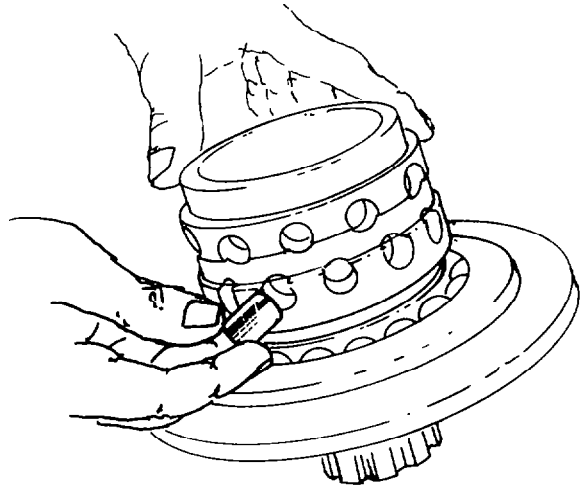

Fig. 301 — Removing Wedges

e. Use a hydraulic press to separate the cage from the bearing retainer cover (see fig. 302).

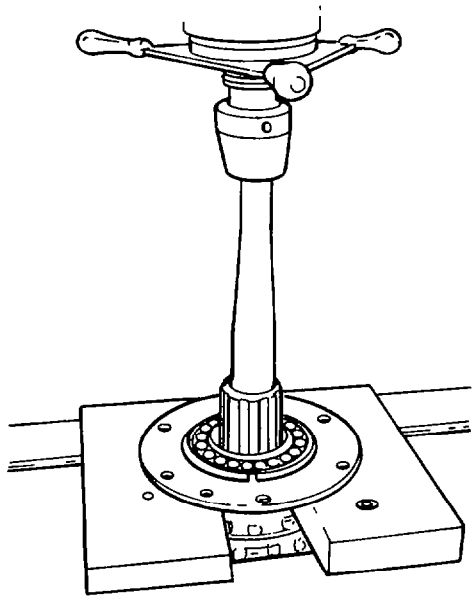

Fig. 302 — Separating Cage and Bearing Retainer Cover

f. Turn the bearing retainer cover over and remove the O-ring.

118 Cleaning

a. Clean all parts having ground and polished surfaces, such as; gears, bearings and shafts in kerosene.

b. Clean parts such as axle housing, carrier housing, hubs and axle shaft flanges in kerosene. Use a stiff bristle brush to remove all old lubricant. Remove all traces of old gaskets. Clean out the lubricant channels in the pinion cage and carrier housing. Make certain that the interior of the axle housing is thoroughly cleaned.

c. Soak the bearings in kerosene until old lubricant, dirt and grit has been loosened. Brush the bearings with a soft bristled brush to remove all dirt and grit, while holding the bearing races to prevent them from turning. Rinse the bearings in clean kerosene then blow dry with clean, moisture free compressed air.

NOTE: 1. Do not spin the bearings with compressed air.
2. If compressed air is not available, use soft, clean, lintless, absorbent paper towels or wiping cloths.

d. Coat the bearings with an engine oil when reassembling.

119 Inspection

a. Thoroughly inspect all drive unit parts for wear or stress, replace parts as necessary. Whenever available, use the Magnaflux non-destructive method to inspect all steel parts with the exception of ball and roller bearings. Always make sure that the parts inspected by this method are demagnetised after inspection.

120 Pinion Shaft Wear Limits

a. Check the pinion shafts carefully for cracks or other surface damage which may lead to early failure.

b. Check that the bearing journals conform to the concentricity requirements. Replace the shaft if the limit of 0.051 mm (0.002 in.) is exceeded by more than 0.025 mm (0.001 in.).

c. Check shaft press fit surfaces to ensure a press fit condition with mating gears and bearings.

d. Check that the splined ends are at the least a tap fit with the mating drive yoke.

121 Gear Wear Limits

a. Replace gears if teeth show any signs of abrasive wear, scratching, ridging, scoring, surface fatigue, pitting, corrosive wear, digging in or cracking.

b. Always replace mated bevel gears in sets.

c. Check gear backlash. With the shim adjusted spiral bevel gears the backlash must never exceed 0.457 mm (0.018 in.) as regards a gear set of fixed centres. The bull gear being non-adjustable can have a backlash as high as 0.762 mm (0.030 in.) before any serious difficulty will be encountered.

122 Bearings and Bushes

a. Check ball and roller bearings for flaking, cracks and fractures, cavities and indentations, staining, measurable wear, brinelling, fretting, corrosion, banking, seizing, galling, scoring, arching, nicking and cage failure. Replace bearings if any of these are apparent.

b. If the bearings pass inspection, dip them in oil (OEP-220) , then wrap them in clean cloth or paper until axle reassembly.

c. Inspect bushes and replace if they are pitted, scored or show any signs of surface cracks or if wear exceeds 0.254 mm (0.010 in.) maximum.

123 Power Divider

a. Check the cam and wedge working surfaces for excessive wear, pitting, excessive scoring or cracks, replace affected parts if any of these faults are apparent.

NOTE: Moderate scoring on the highly-stressed rubbing surfaces of cam tracks, is a normal condition.

b. Replace the driving cage member if the wedge hole diameter has worn more than 0.254 mm (0.010 in.) above the diameter of 17.386 – 17.412 mm (0.6845 – 0.6855 in.).

NOTE: Never run new wedges against a used inner cam or vice versa. It is possible however, to use slightly worn outer cams and driving cages during rebuild. In any case, always replace wedges in sets matched within 0.025 mm (0.001 in.). Never mix old sets and never mix old with new sets.

124 Axle Shafts

a. Inspect axle shafts for bends, torsional fractures or other indications of impending failure. Inspect splines for wear, cracks or distortion. Replace the axle shaft if there is any evidence of these conditions.

b. Install each axle shaft between lathe centres and check the shaft run-out using a dial indicator. Replace the shaft if the run-out exceeds 1.524 mm (0.060 in.) when measured at the centre of the shaft or 0.762 mm (0.030 in.) when measured at locations 152.40 mm (6.0 in.) from each end.

125 Reassembly

a. Before reassembling the carrier, replace all damaged parts or parts having dimensions or fits in excess of specification. Replace all oil seals, O-rings and gaskets. Replace all selflocking bolts, lockwashers or any hardware assembled with Loctite or Dri-lock. Remove nicks, mars or burrs from machined or ground surfaces. Ensure that all threads are clean and free to obtain accurate adjustment and correct torque.

126 Bevel Pinion Shaft Assembly (Intermediate Carrier)

a. Note and record the dimension etched on the back of the bevel pinion gear and measure the thickness of the pinion head as shown in fig. 303.

NOTE: These dimensions will be required later to determine the ideal shim pads.

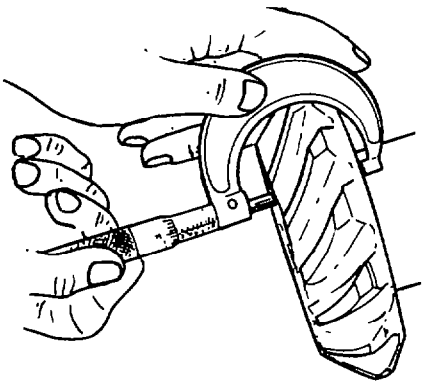

Fig. 303 — Measuring Bevel Pinion Gear

b. Using a hydraulic press, install the front bearing cup into the bevel pinion housing (see fig. 304).

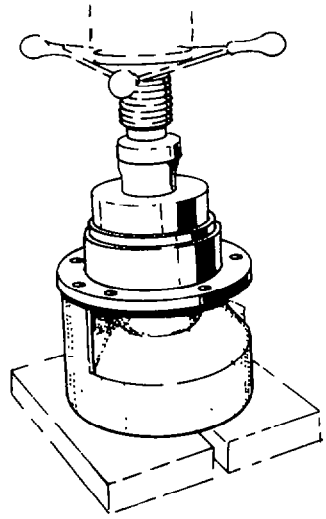

Fig. 304 — Installing Front Bearing Cup

c. Turn the housing over and press the rear bearing cup into the housing.
d. Temporarily install the rear bearing cone into the cup, apply pressure to the cone with your hand, and using a depth micrometer, measure and record the distance from the top of the bearing cone to the flange surface of the housing. Remove the bearing cone (see fig. 305).

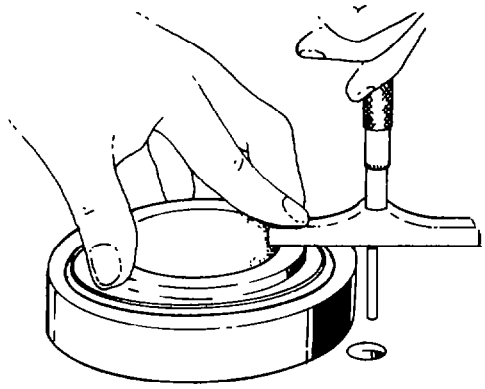

Fig. 305 — Measuring Bearing for Shimming

e. Press the rear bearing cone onto the bevel pinion shaft.
f. Press the front bearing cone onto the outer cam.
g. Install the spacers in their respective position on the bevel pinion shaft (see fig. 306), then install the bevel pinion housing onto the pinion shaft.

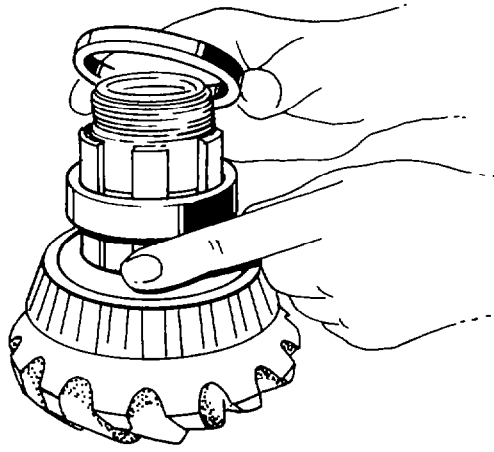

Fig. 306 — Fitting Spacers

h. Using the press, install the outer cam of the power divider into the bevel pinion housing.

i. Using the hydraulic press, apply 15 450 kg (34 000 lb) pressure to the outer cam. Wrap a cord several times around the bevel pinion housing at the pilot area, then attach a suitable spring scale to the end of the cord. Pull on the scale with a slow and steady pull until the housing rotates. The correct load on the scale to keep the housing turning slowly and evenly is 1.3 – 2.72 kg (3 – 6 lb). If the reading on the scale is not within the correct range, replace the spacers with thicker or thinner spacers as necessary to obtain the correct bearing preload (see fig. 307).

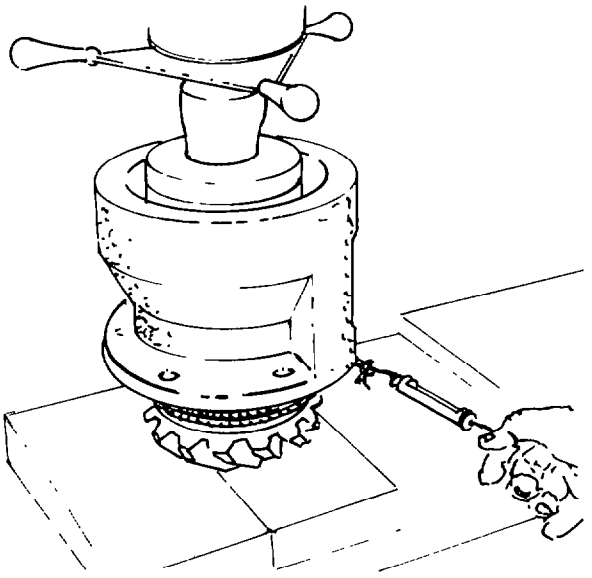

Fig. 307 — Checking Bearing Pre-loading

j. After establishing the correct bearing preload, install the power divider outer cam nut onto the bevel pinion, then mount the assembly in a soft jawed vice and torque the nut to 1356 – 1760 Nm (1000 – 1300 lb.ft).

NOTE: It is recommended that a new cam nut, impregnated with DRI-LOCK No. 299, be used. In emergency cases, the old nut may be used, but only after the threads of the bevel pinion and the cam nut have been thoroughly cleaned and primed. Then coat the bevel pinion threads with LOCTITE No. 262.

> *CAUTION:*
> *Make certain that none of the LOCTITE No. 262 is allowed to drip into the bearings, as it may cause bearing failure.*

k. Using the dimension established in step a., subtract the pinion head thickness from the dimension etched on the back of the bevel pinion gear. The result is the mounting distance of 71.425 mm (2.812 in.).

l. Temporarily install the bevel pinion into the carrier housing using the shims removed during the disassembly or the equivalent thickness of new shims. Use alignment pins to retain the shim pack while installing the bevel pinion. Install bolts and lockwashers, then remove the alignment pins and install the remaining bolts and lockwashers. Torque the bolts to 210 – 250 Nm (155 – 185 lb.ft).

m. Verification of the correct bevel pinion shim pack thickness can be made with special depth gauge tools. These tools also check the mounting distance for correct pinion mesh and tooth contact. The tools required for the depth gauge are: Gauge Pin No. J-26481-27; Plugs Nos. J-26481-1 and J-26481-2; Tube No. J-26481-13 and Body Assembly J-26481-14. These tools are installed into the carrier housing in place of the helical pinion assembly.

n. Before installing the depth gauge, make certain all contacting surfaces are free of dirt and burrs then set plugs (C) in the carrier housing. Install the gauge pin (B) on the body assembly (F), then slide the pin and body assembly onto the tube (A) until they are opposite the face of the bevel pinion.

o. Insert feeler gauge (D) between the bevel pinion and the gauge pin to determine the proper shim pack (E).

NOTE: To obtain the thickness of the feeler gauge, subtract the dimension of the gauge arm from the mounting distance. If the feeler gauge cannot be inserted between the bevel pinion and the gauge pin, add shims as required. If the feeler gauge fits loosely, remove shims to attain a snug fit. After determining the proper shim pack remove the depth gauge, remove also the bevel pinion and housing assembly and set aside. Wire the shim pack together.

127 Bevel Pinion Shaft Assembly (Rear Carrier)

a. Note and record the dimension etched on the back of the bevel pinion gear, also measure and record the thickness of the pinion head (see fig. 308). These dimensions will be required later to determine the ideal shim pack.

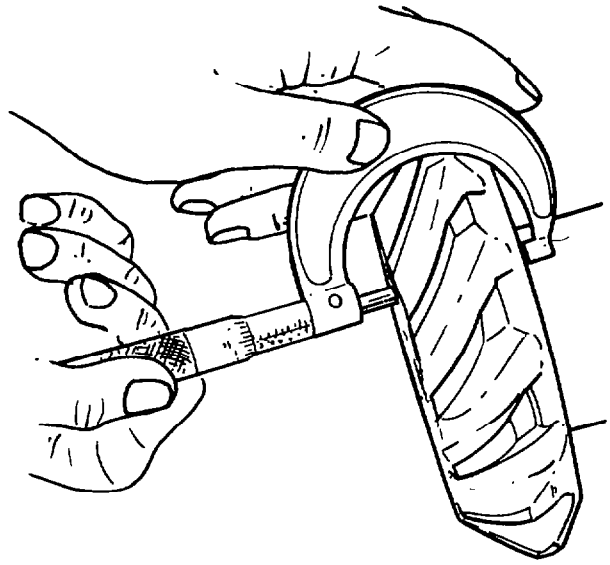

Fig. 308 — Measuring Bevel Pinion Gear

b. Install the front bearing cup into the bevel pinion housing, using a hydraulic press (see fig. 309). Then turn the housing over and install the rear bearing cup.

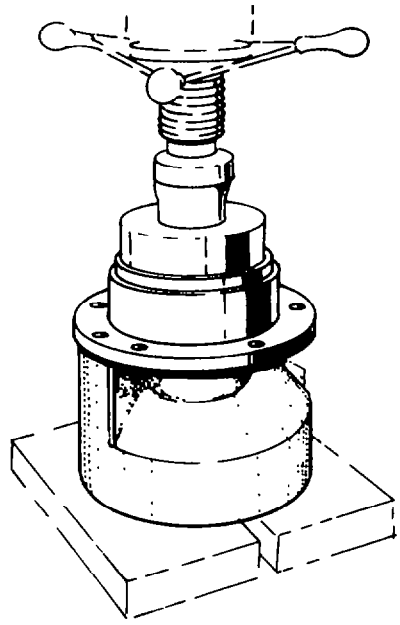

Fig. 309 — Installing Front Bearing Cup

c. Press the rear bearing cone onto the bevel pinion shaft.
d. Install the bevel pinion housing onto the bevel pinion shaft.
e. Install the bevel pinion spacer onto the pinion shaft.
f. Install the front bearing cone into the bevel pinion housing, then position the assembly on a hydraulic press. Wrap a cord several times around the pinion housing at the pilot area and attach a suitable spring scale to the end of the cord. Apply a pressure of 15 450 kg (34 000 lb) to the assembly with the hydraulic press, then with a slow and steady pull, pull on the scale until the housing rotates. The correct load on the scale to keep the housing turning slowly and evenly is 1.363 – 2.727 kg (3 – 6 lb). If the reading on the scale is not within the correct range, replace the spacer with thicker or thinner spacers as necessary to obtain the correct bearing preload (see fig. 310). A selection of 23 hardened steel spacers are available. These spacers are approximately half the thickness of the production spacer, and when used in combination-of-two the resultant thickness can be adjusted in increments of 0.025 mm (0.001 in.) for precise bearing spacing and preloading. Measure the thickness of the spacer being used, then locate the required thickness in Table 1. Follow the columns to the left and to the top of the table to obtain the sizes of the spacers to be used in combination. After establishing the correct bearing preload, remove the bevel pinion housing from the press.

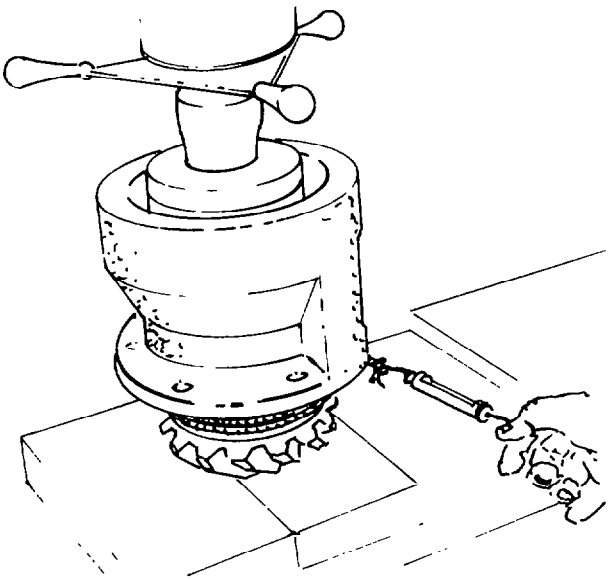

Fig. 310 — Checking Bearing Pre-loading

g. Install the oil seal in the bearing retainer cover, using a hammer and a piece of bar stock.
h. Install the bearing retainer cover and new gasket on the bevel pinion housing. Install bolts and lock washers, tighten the bolts to 41 – 54 Nm (30 – 40 lb.ft).
i. Using the dimensions established in para. a., subtract the pinion head thickness from the dimension etched on the back of the bevel pinion gear. The result is the mounting distance of 76.20 mm (3.000 in.).
j. Temporarily install the bevel pinion into the carrier housing using the shims removed during the disassembly or the equivalent thickness of new shims. Use alignment pins to retain the shim pack while installing the bevel pinion. Install bolts and lockwashers, then remove the alignment pins and install the remaining bolts and lockwashers. Torque the bolts to 210 – 250 Nm (155 – 185 lb.ft).
k. Verification of the correct bevel pinion shim pack thickness can be made with special depth gauge tools. These tools also check the mounting distance for correct pinion mesh and tooth contact. The tools required for the depth gauge are: Gauge Pin No. J-26481-19; Plugs Nos. J-26481-1 and J-26481-2; Tube No. J-26481-13 and Body Assembly J-26481-14. These tools are installed into the carrier housing in place of the helical pinion assembly.
l. Before installing the depth gauge, make certain all contacting surfaces are free of dirt and burrs then set plugs (C) in the carrier housing. Install the gauge pin (B) on the body assembly (F), then slide the pin and body assembly onto the tube (A) until they are opposite the face of the bevel pinion.

m. Insert a feeler gauge (D) between the bevel pinion and the gauge pin to determine the proper shim pack (E) (see fig. 311).

NOTE: To obtain the thickness of the feeler gauge, subtract the dimension of the gauge arm from the mounting distance.
If the feeler gauge cannot be inserted between the bevel pinion and the gauge pin, add shims as required. If the feeler gauge fits loosely, remove shims to attain a snug fit. After determining the proper shim pack, remove the depth gauge, remove also the bevel pinion and housing assembly and set aside. Wire the shim pack together.

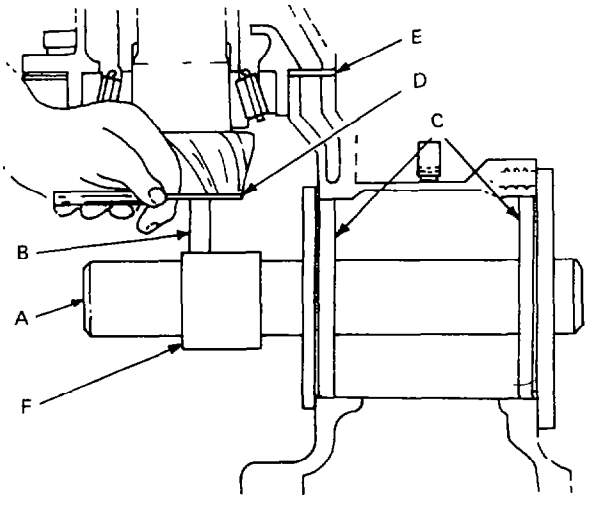


Fig. 311 — Verifying Shim Pack Thickness

128 Helical Pinion Shaft

a. Using a hydraulic press install the left-hand bearing cup into the bearing retainer housing (see fig. 312).

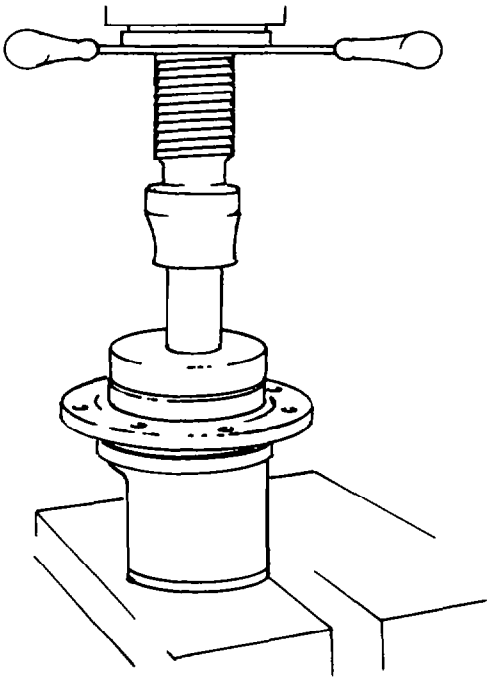

Fig. 312 — Installing Left-hand Bearing Cup

b. Turn the housing over and (after ensuring that the hole is clean and free from lubricant or cleaning fluid) install the locating pin as shown in fig. 313.

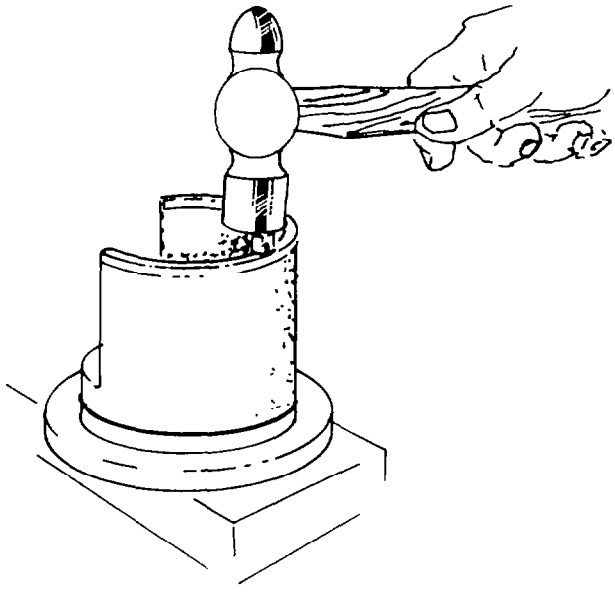

Fig. 313 — Installing Locating Pin

c. Install the left-hand bearing onto the keyway end of the shaft, using the hydraulic press (see Fig. 314).

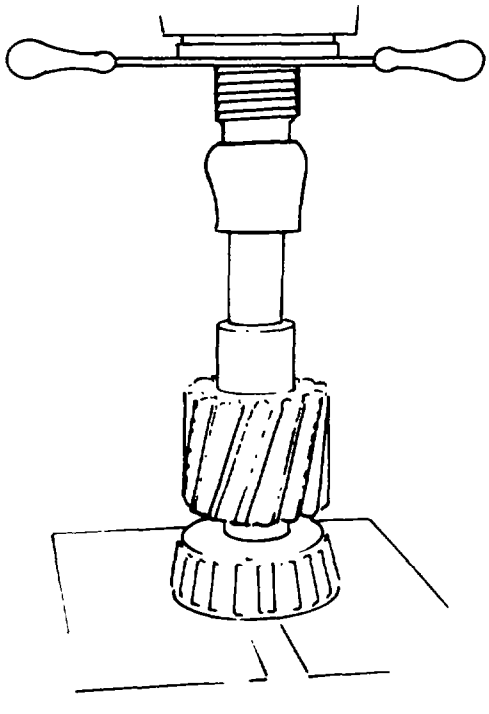

Fig. 314 — Installing Left-hand Bearing Cone

d. Remove the pinion shaft from the press and install the key into the keyway, using a hammer (see fig. 315).

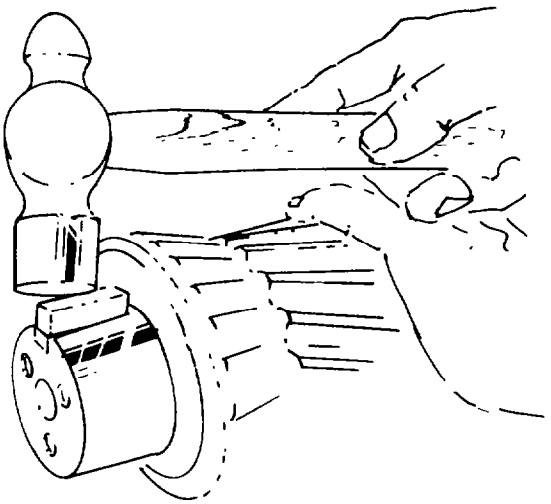

Fig. 315 — Installing Key

e. Align the pinion gear keyway with the key in the shaft, then press the gear onto the shaft using the hydraulic press (see fig. 316).

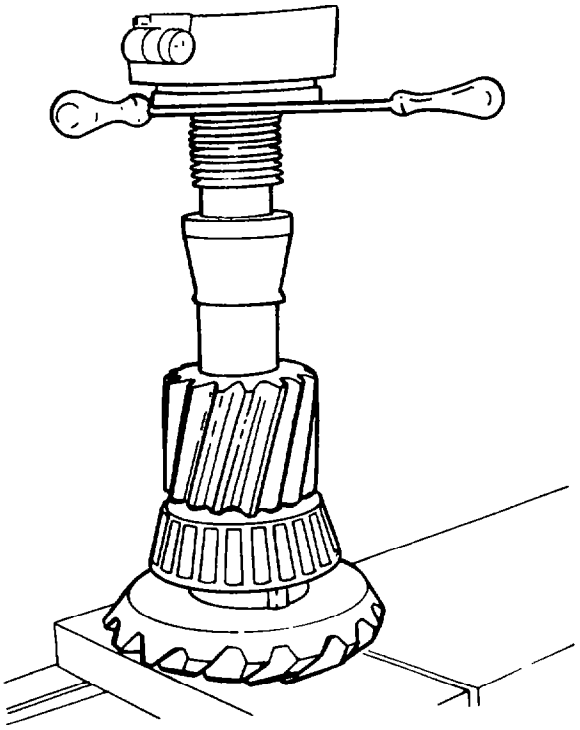

Fig. 316 — Installing Pinion Gear onto Shaft

f. Position the pinion shaft assembly in a soft jawed vice, align the clamp plate and install the retaining bolts (see fig. 317). Torque the bolts to 75 – 100 Nm (55 – 75 lb.ft).

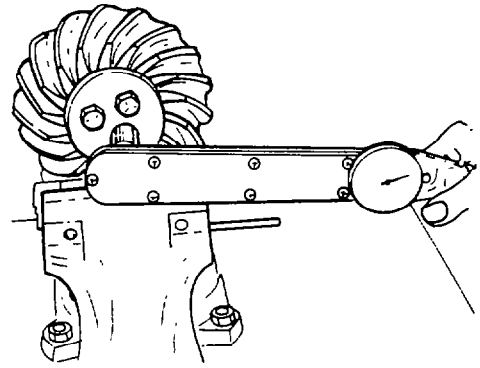

Fig. 317 — Installing Clamp Plate

g. To determine the bearing preload, temporarily align and position the left-hand bearing cup onto the shaft assembly as shown in fig. 318.

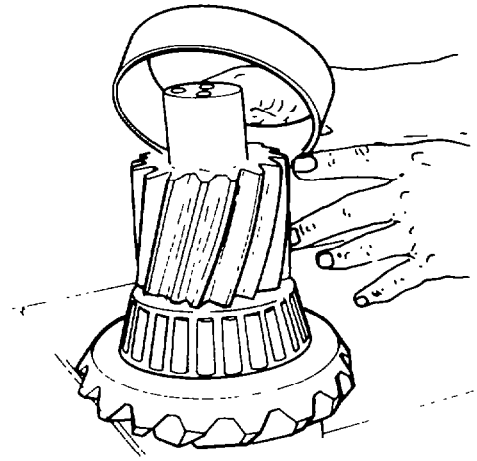

Fig. 318 — Fitting Left-hand Bearing Cup

h. Install the bearing retainer housing onto the shaft assembly ensuring that the alignment pin in the housing aligns with the slot in the bearing cup (see fig. 319).

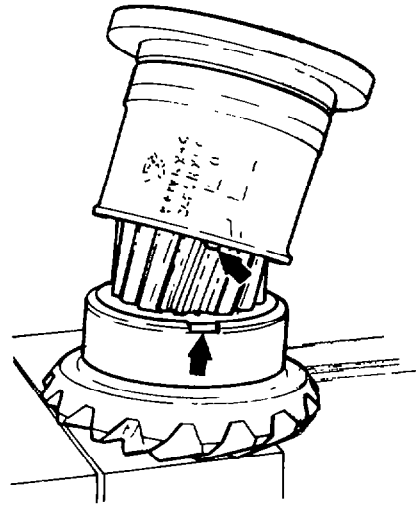

Fig. 319 — Installing Bearing Retainer Housing

i. Install the spacer as shown in fig. 320.

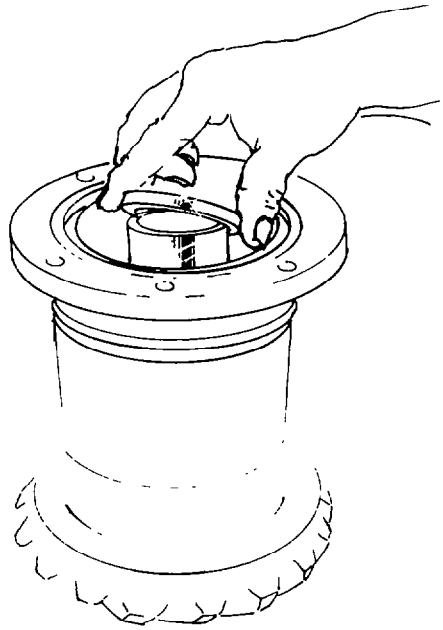

Fig. 320 — Installing Spacer

j. Position the bearing cone onto the pinion shaft, then press into place with a hydraulic press (see fig. 321).

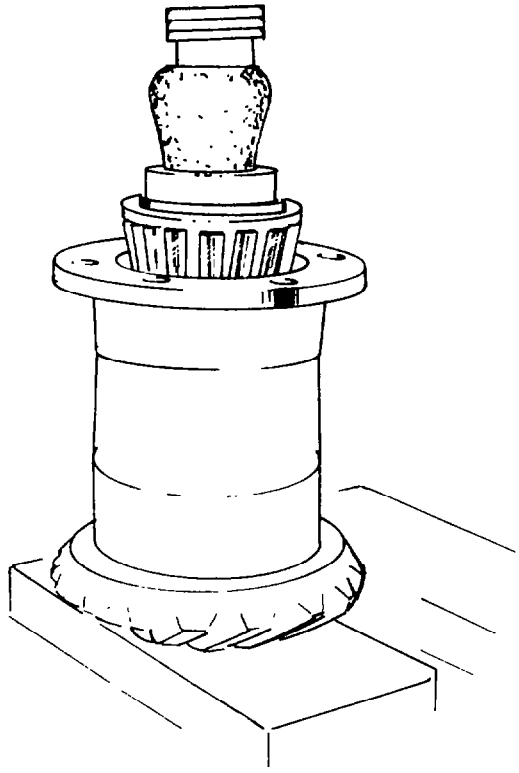

Fig. 321 — Installing Bearing Cone

k. Using the hydraulic press, apply 15 454 kg (34 000 lb) pressure to the bearing retainer assembly. Wrap a cord several times around the bearing retainer, then attach a suitable spring scale to the end of the cord (see fig. 322). Pull on the scale with a slow steady pull until the housing rotates. The correct load on the scale to keep the housing turning slowly and evenly is 1.36 – 2.72 kg (3 – 6 lb). If the reading on the scale is not within the correct range, replace the spacer with a thicker or thinner spacer as necessary, to obtain the correct reading.

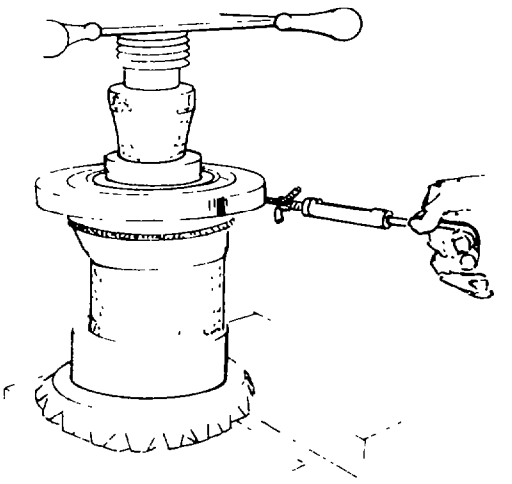

Fig. 322 — Checking Bearing Pre-Loading

l. After establishing the correct bearing pre-load, remove the assembly from the press. Disassemble the bearing cone, the spacer and bearing retainer assembly from the shaft assembly, and remove the left-hand bearing cap from the shaft assembly.

m. Install the left-hand bearing cup into the carrier housing, and make sure the cup is properly seated.

n. Place the shim pack which was removed and wired together at initial disassembly, or new shims of equal thickness, onto the bearing retainer. Fit a new O-ring onto the bearing retainer, then install the retainer into the carrier housing with the aid of alignment pins. Ensure the bearing retainer alignment pin is aligned with the slot in the left-hand bearing cup (see figs. 323 and 324).

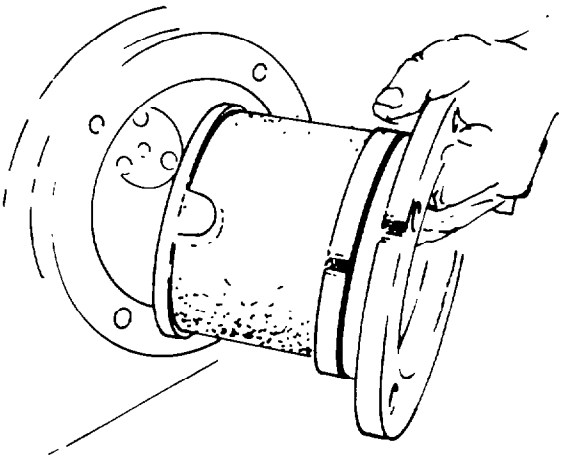

Fig. 323 — Installing Retainer

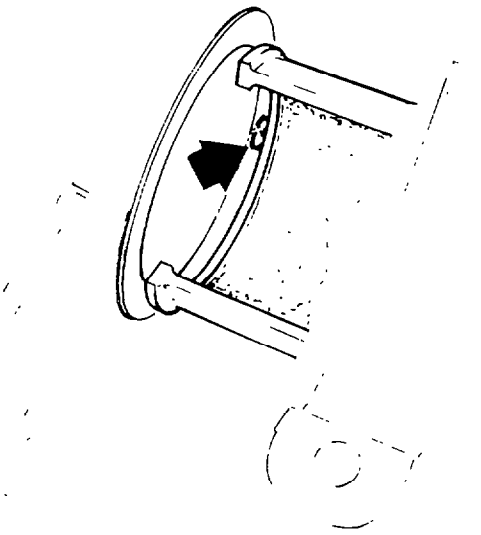

Fig. 324 — Aligning Pin and Slot

o. Install the helical pinion shaft assembly into the carrier housing as shown in fig. 325, and position a block of wood into the housing to support the shaft.

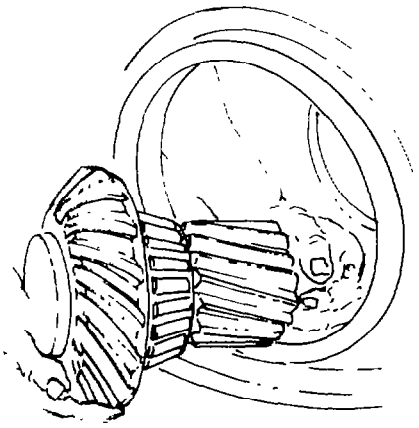

Fig. 325 — Installing Helical Pinion Shaft

p. Install the correct sized spacer (determined while preloading the bearing), then install the bearing cone as shown in fig. 326.

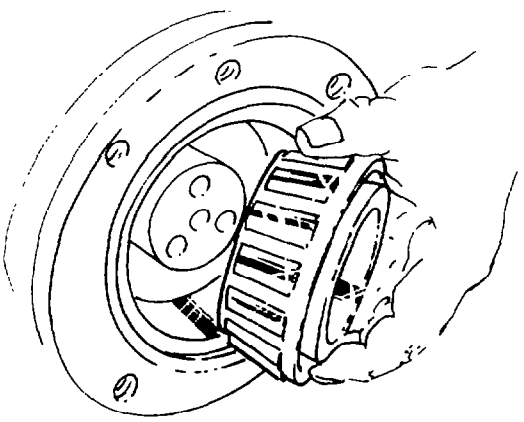

Fig. 326 — Installing Bearing Cone

q. Install the clamp plate and retaining bolts as shown in fig. 327. Torque the retaining bolts to 75 - 100 Nm (55 - 75 lb.ft).

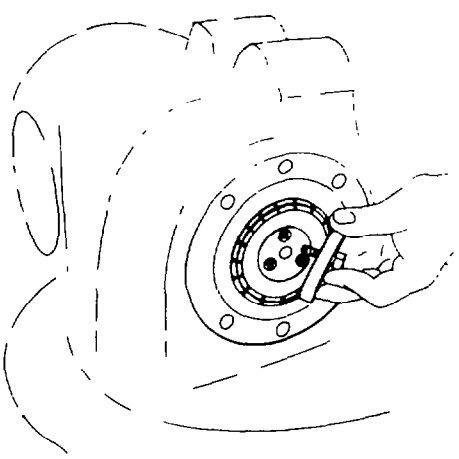

Fig. 327 — Installing Clamp Plate and Retaining Bolts

r. For timing and checking of proper tooth contact of the bevel gears, temporarily install shorter retaining bolts to secure the bearing retainer. Torque the retaining bolts to 61 – 88 Nm (45 – 65 lb.ft).

129 Setting the Spiral Bevel Gears

a. Install the bevel pinion shaft assembly into the carrier housing, using the shim pack previously determined at the bevel pinion shaft reassembly.

b. Using a dial indicator mounted on the carrier housing, check the backlash between the bevel pinion and the helical pinion shaft as shown in fig. 328. If necessary add or subtract shims to obtain a backlash of 0.152 – 0.432 mm (0.006 – 0.017 in.).

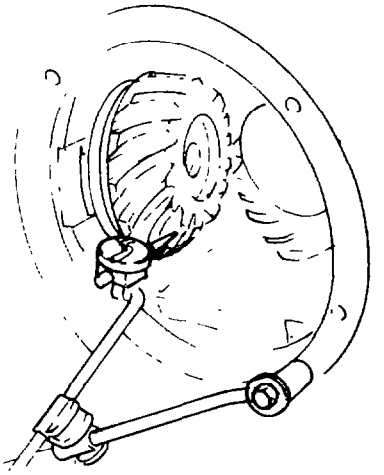

Fig. 328 — Checking Backlash

c. Remove the dial indicator.

d. Check tooth contact for proper gearset mesh by painting the teeth on the bevel gear with a gear marking compound e.g. red lead, and turning the bevel pinion in the direction of forward drive, while applying a braking load to the bevel gear.

NOTE: To be able to turn the bevel pinion on the intermediate carrier install the power divider outer cam and retaining nut onto the pinion shaft, and use a socket and suitable bar or a tool made to fit into the outer cam. To turn the bevel pinion on the rear carrier, install the drive yoke and retaining bolt on the pinion shaft and turn by means of a tool fitted to the drive yoke. To apply a braking load to the bevel gear, wedge a pry bar or similar tool against the smooth edge of the teeth of the helical pinion shaft.

e. Compare the tooth contact with those shown in figs. 329.

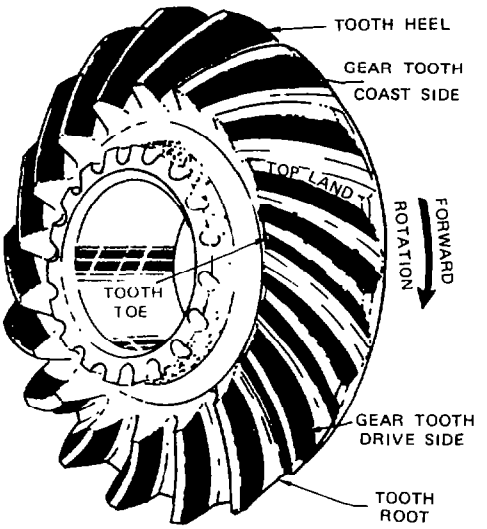


Fig. 329 — Pinion to Crown Wheel Tooth Contact Pattern

NOTE: Shimming the bevel pinion inwards moves the contact area towards the gear tooth root and slightly towards the heel on the drive side of the tooth and towards the gear tooth root and slightly towards the toe on the coast side of the tooth. By shimming the bevel pinion outward the contact area moves towards the gear tooth top land and slightly towards the toe on the drive side of the tooth and towards the gear tooth top land and slightly towards the heel on the coast side of the tooth. Shimming the bevel gear inward moves the contact area towards the toe and slightly towards the gear tooth top land on the drive side of the tooth and towards the toe and slightly towards the gear tooth root on the coast side of the tooth. Shimming the bevel gear outward moves the contact area towards the heel and slightly towards the gear tooth root on the drive side of the tooth and towards the heel and slightly towards the gear tooth root on the coast side of the tooth.

f. After obtaining correct gears of mesh, re-check the backlash between the bevel pinion and the helical pinion shaft. If backlash is incorrect it will be necessary to move both the bevel pinion and the helical pinion shaft to maintain a satisfactory pattern..

g. Temporarily disassemble the bevel pinion and the helical pinion shaft from the carrier housing. Wire the bevel pinion shims together for use at final assembly, and wire the helical pinion shaft shims together to use when checking the tooth contact pattern between the helical pinion shaft and the bull gear.

130 Inter-Wheel Power Divider Differential

NOTE: During reassembly of the differential, liberally lubricate all differential components with fresh oil (OEP-220).

a. Using a hydraulic press, install a new pre-sized bush into the power divider driving cage until the bush is recessed 0.079 – 0.155 mm (0.031 – 0.061 in.) below the inner cam thrust surface of the cage.

b. Using the hydraulic press, install the left-hand bearing cone onto the hub of the power divider differential side casing, then set the assembly aside temporarily.

c. Install the right-hand bearing cone on the hub of the driving cage using a hydraulic press. Remove the driving cage from the press and place on the hub end on a work bench.

d. Install the outer retaining ring into the groove located between the cage wedge holes.

e. Install all 24 wedges from inside the cage so that the word "OUT" on each wedge is radially outside the cage.

f. Ensure all the wedges are pushed outward, then dip the hub of the inner cam in gear oil (OEP-220), align the hub of the inner cam with the bush in the driving cage and install the inner cam (see fig. 330).

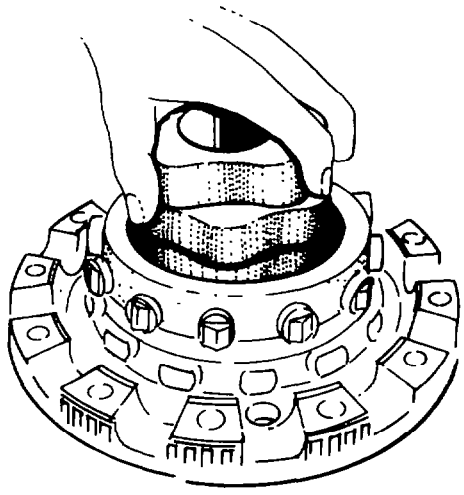

Fig. 330 — Installing Inner Cam

g. After installing the inner cam push all the wedges inward so that they all make contact with the inner cam, then install the outer cam over the wedges (see fig. 331). Do not try to force the outer cam over the wedges.

> *CAUTION:*
> *Be careful not to trap your fingers as the outer cam will drop into place when all the wedges are contacting the inner cam.*

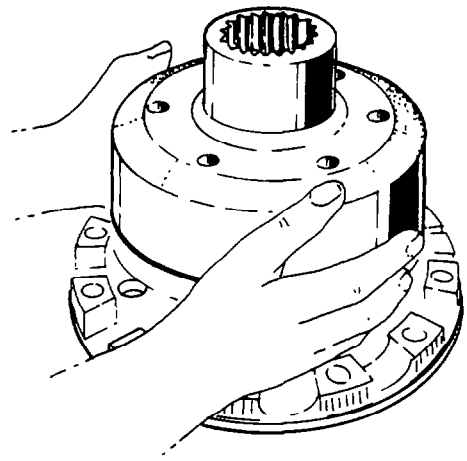

Fig. 331 — Installing Outer Cam

h. Align and position the side casing onto the cage assembly using the match marks made when disassembling the power divider (see fig. 332).

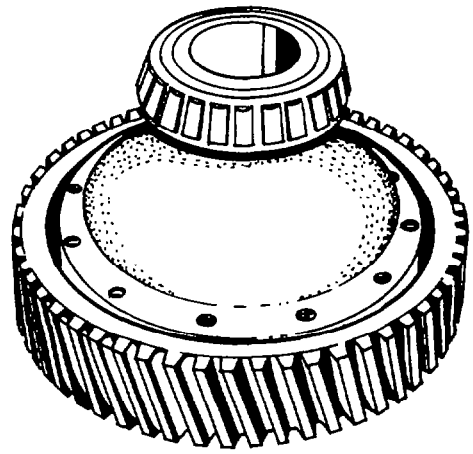

Fig. 332 — Aligning Side Casing and Cage Assembly

i. Align and install the bull gear using the match marks also made at disassembly. Install and hand tighten the retaining bolts (see fig. 333).

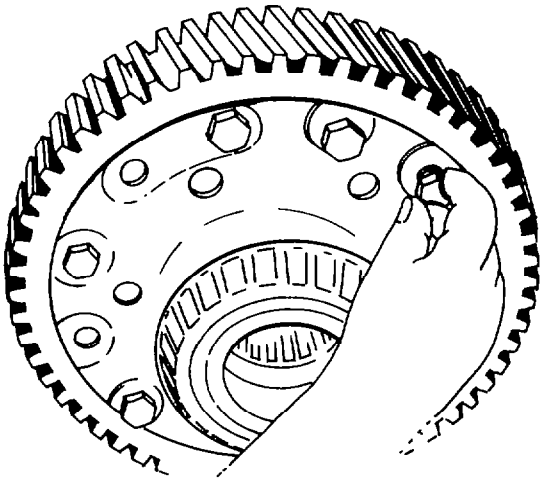

Fig. 333 — Installing Bull Gear and Retaining Bolts

j. Mount the assembly in a soft jawed vice and torque the retaining bolts to 136 - 163 Nm (100 - 120 lb.ft), then wire the heads of the retaining bolts together in pairs (see fig. 334).

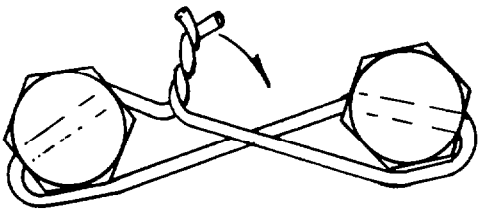

Fig. 334 — Lock-wiring Bolts

k. Install the bearing adjusting nut onto the right-hand bearing cup, tightening it about two turns.
l. Position the right- and left-hand bearing cups onto their respective bearing cones.
m. Using suitable lifting equipment, install the differential assembly (see fig. 335). Ensure the bearing cups are properly seated on the bearing pedestals.

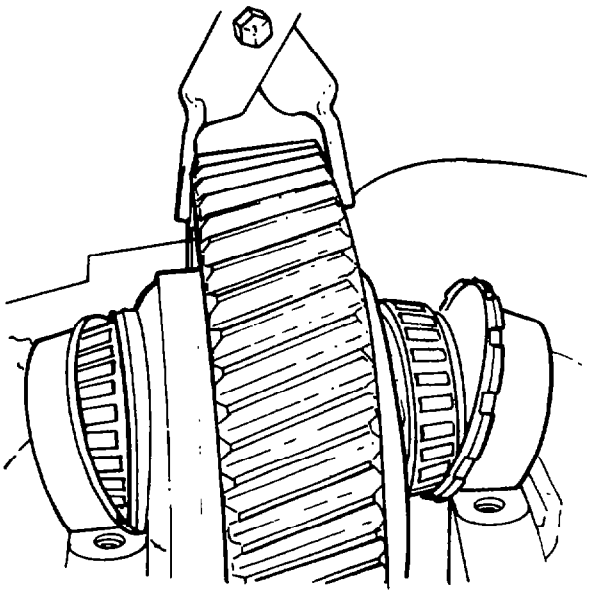

Fig. 335 — Installing Differential Assembly

n. Align the punch marks on the bearing caps, made at disassembly, with these on the bearing pedestals and position them over the bearing cups. Apply Loctite 262 or similar to the retaining bolts, allow it to cure, then install the bolts and tighten enough to permit the bearings to be adjusted.

o. Position the differential bearing adjustment fixture (Tool No. J-26440) on the carrier housing. Lubricate the bearings with OEP-220 gear oil. Then while turning the differential assembly, adjust the right-hand bearing adjusting nut with tool no. J-26437 until the bearings have a slight pre-load. Relieve the bearing preload by hitting the bearing cap with a plastic mallet as shown in fig. 336.

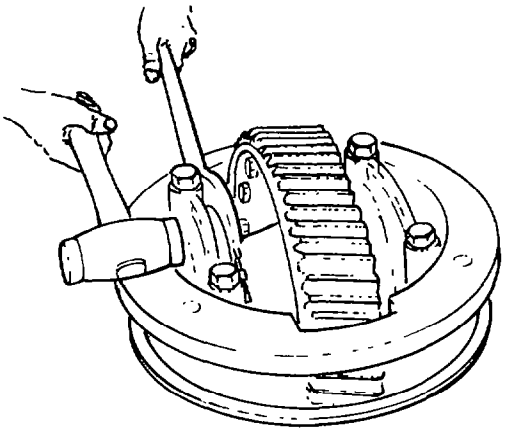

Fig. 336 — Pre-loading Bearing

p. Position a calibrated hooked lever on the bull gear and connect a spring scale to the lever 305 mm (12 in.) from the centre of the bull gear, as shown in fig. 337. Adjust the right-hand bearing with adjusting tool J-26437, while pulling on the scale. The correct pull to keep the differential turning slowly and evenly when the bearings are properly pre-loaded is 0.909 – 1.364 kg (2 – 3 lb).

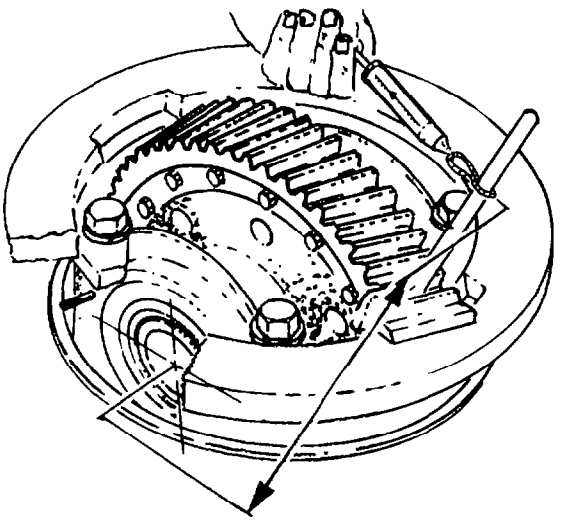

Fig. 337 — Checking Bearing Pre-load

q. Check that a slot in the adjusting nut aligns with the lock pin hole in the pedestal. If necessary tighten the adjusting nut slightly to align.

r. Torque the bearing cap retaining bolts to 360 – 400 Nm (265 – 295 lb.ft). Recheck the rolling drag and adjust if necessary.

s. Remove the differential bearing adjustment fixture, install the adjusting nut lock pin, and secure with a split (cotter) pin (see figs. 338 and 339).

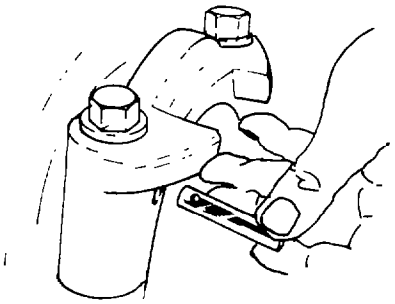

Fig. 338 — Installing Locking Pin

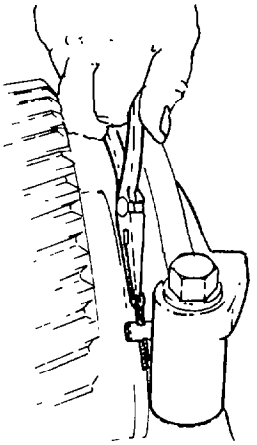

Fig. 339 — Installing Split Pin

t. Temporarily install the helical pinion shaft into the carrier housing as previously outlined. Ensure that the helical pinion is engaged with the bull gear, then coat the teeth of the bull gear and helical pinion with gear marking compound e.g. engineer's blue.

u. Rotate the bull gear in forward and reverse directions to determine the tooth contact pattern. The contact pattern must be within the limits shown in fig. 340 on both the drive and coast sides. Because there are no adjustments, if it is determined that the tooth contact pattern is not acceptable, both the bull gear and helical pinion shaft must be replaced as a matched set. After establishing the correct tooth pattern, the assembly of the differential is complete.

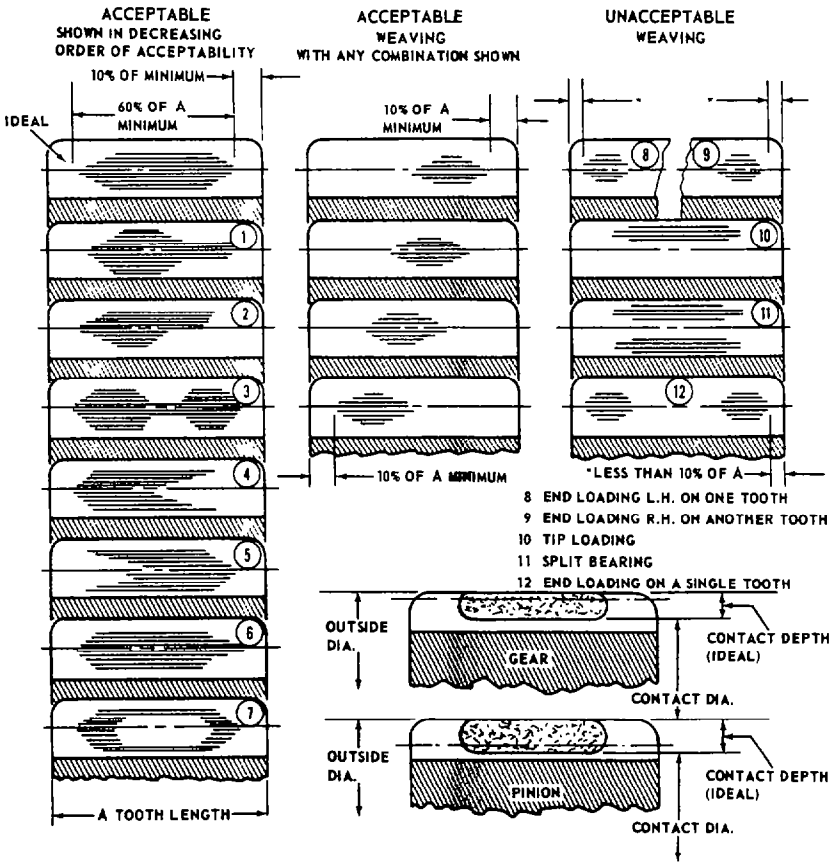


Fig. 340 — Tooth Contact Patterns

131 Helical Pinion Shaft Retainer Cover

a. Remove the short retaining bolts from the helical pinion shaft bearing retainer and install alignment pins.

b. Lightly oil the retainer gasket (O-ring) with engine oil and install the gasket into the groove provided in the retainer (see fig. 341).

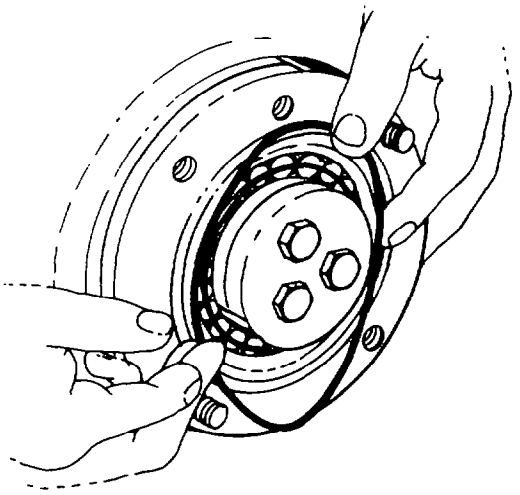

Fig. 341 — Installing O-ring

c. Install the retainer cover and the proper retaining bolts. Torque the bolts to 61 – 88 Nm (45 – 65 lb.ft).

d. The assembly of the helical pinion shaft is now complete.

132 Bevel Pinion Assembly

a. Using the shims as determined while adjusting the bevel pinion assembly for proper tooth contact pattern and proper backlash between gears, install the bevel pinion and housing assembly using the proper self-locking bolts. Torque the bolts to 174 – 207 Nm (128 – 153 lb.ft).

NOTE: When assembling a carrier with a power divider, it is necessary to use an offset extension No. J-28506 with the torque wrench as shown in fig. 342.

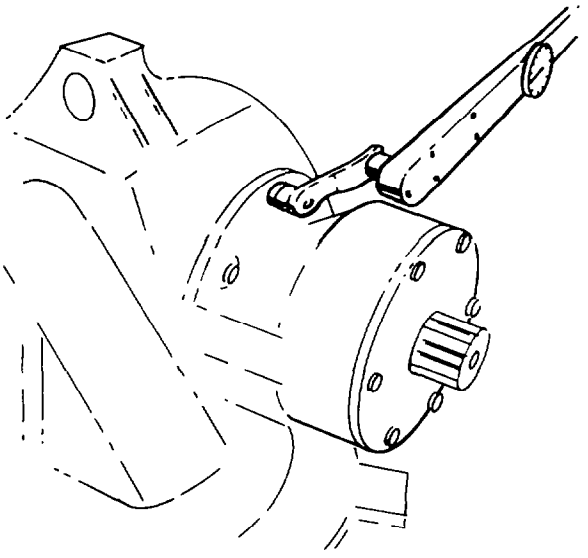

Fig. 342 — Tightening Housing Bolts

133 Inter-Axle Power Divider

a. Install the outer retaining ring into the slot provided in the cage. Then install a matched set of 24 wedges from inside the cage so that the word "OUT" on each wedge is visible on the outside of the cage.

NOTE: New wedges and inner cams are electro-chemically coated with a dry lubricant known as the Parco-Lubrite process. The coating which is black in appearance, must not be scraped off as it provides for start-up lubrication.

b. Make certain all of the wedges are pushed outward as far as possible, then install the inner retaining ring into the slot provided inside the cage.

c. Dip the inner cam in OEP-220 lubricant and install inside the cage (see fig. 343). Push all the wedges in until they contact the inner cam lobes. Set aside temporarily.

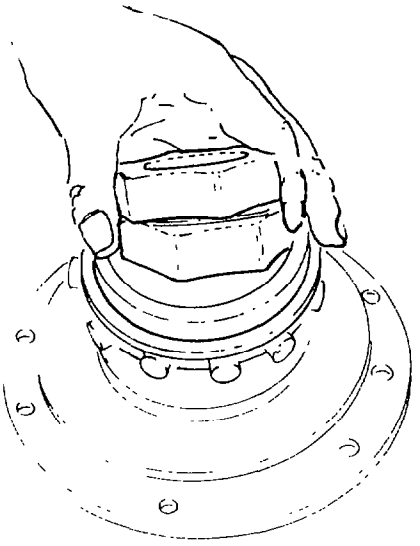

Fig. 343 — Installing Inner Cam

d. Install the bearing into the power divider lockout housing using a hammer and a suitable drift.

e. Install the seal into the bearing retainer cover.

f. Assemble the sleeve, spacers and piston onto the piston shaft, and install the nut and washer to retain them. Then install a felt and O-ring into the grooves in the piston.

g. Install the sliding clutch onto the power divider cage, then position the carrier assembly so that the cage assembly can be installed into the outer cam. Align the cage assembly and install, ensuring that the cage is properly seated. Do not try to force the cage into the cam.

NOTE: The inner cam will be held in position by the driving wedges.

h. Apply a non-hardening gasket compound to the mounting surface on the back of the power divider lockout housing and install the gasket on the housing.

i. Insert the selector fork through the rear opening of the power divider lockout housing, then install the housing onto the bevel pinion housing, while keeping the selector fork elevated to clear the clutch.

j. Align and install the selector fork into the grooves provided in the sliding clutch.

k. Install the retaining bolts and washers and torque to 40 – 55 Nm (30 – 40 lb.ft).

l. Position the spring over the piston shaft behind the piston assembly. Install the shaft through the front of the selector housing, the selector fork and into the hole provided in the rear of the selector housing.

m. Align the notch in the piston shaft with the hole in the selector fork, then install the fork locating screw and torque to 47 – 61 Nm (35-45 lb.ft). Install lockwire through the locating screw and secure.

n. Apply a non-hardening gasket compound to the mounting face of the air cylinder and to the lockout housing top cover, then align and install gaskets to the cylinder and cover.

o. Install the cylinder and cover and secure with bolts and lockwashers. Torque the bolts to 40 – 55 Nm (30 – 40 lb.ft).

p. Position the bearing cover on the lockout housing and check the gap between the mounting faces. If less than 0.127 mm (0.005 in.) a spacer gasket is not required. If the gap is more than 0.127 mm (0.005 in.), fit a spacer gasket to prevent the distortion of the cover which causes a loose oil seal condition when the retaining bolts are tightened.

q. Remove the cover assembly from the lockout housing, lightly lubricate the O-ring and install into the groove provided in the cover assembly.
r. Install the cover assembly (with spacer gaskets if required) onto the lockout housing. Install the retaining bolts and washers, torque the bolts to 40 – 55 Nm (30 – 40 lb.ft).

134 Inter-Axle Through Shaft

a. Install a new seal into the through shaft bearing cover, as shown in fig. 334, then temporarily set it aside.

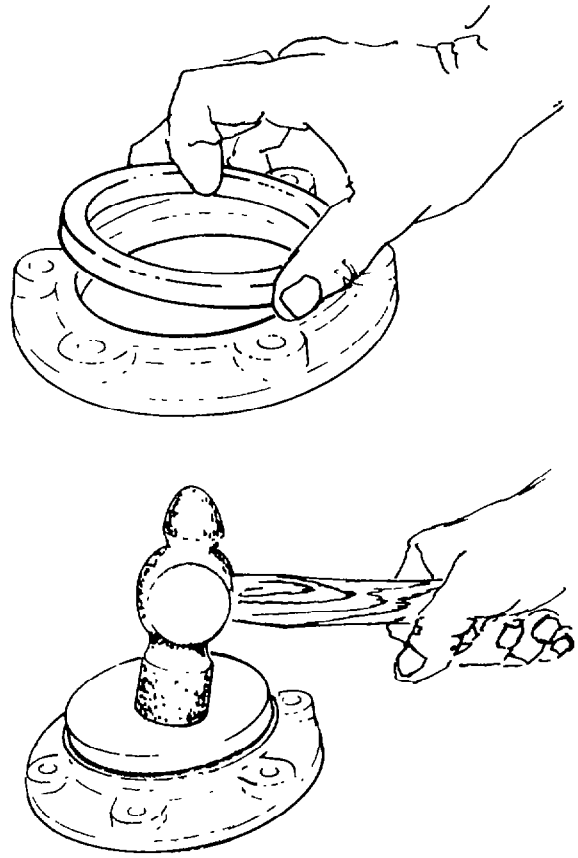

Fig. 344 — Installing Oil Seal

b. Install the rear bearing onto the through shaft using a hydraulic press.
c. Using a hydraulic press, install the through shaft and bearing assembly into the rear bearing retainer and oil tube assembly.
d. Temporarily position the bearing cover over the through shaft and press lightly into place. The cover flange pilot will bottom out against the outer bearing race.
e. Using feeler gauges, measure the gap between the bearing cover and retainer flanges. Add 0.127 – 0.254 mm (0.005 – 0.010 in.) to the measured amount to obtain the proper thickness of the gasket to be used to provide enough clamping force to prevent the bearing from rotating within the retainer, as well as providing a seal to prevent lubricant leakage.
f. Remove the bearing cover and through shaft from the hydraulic press. Apply a non-hardening gasket compound to the carrier housing retainer mating surface. Position the proper sized gasket onto the housing while the compound is wet.

> *CAUTION:*
> *The power divider wedges are lubricated through the through shaft bearing retainer and the bevel pinion. When the through shaft bearing retainer is installed, make sure that the oil inlet is on top. If the Retainer is rotated so the oil inlet is not in the top position, the inter-axle power divider will be damaged because of a lack of lubricant.*

g. Lubricate the through shaft with oil OEP-220, then carefully install the shaft assembly, aligning the shaft splines with the internal splines of the inner cam in the power divider, while making certain that the oil inlet is properly positioned.
h. Align the cover and install the retaining bolts and washers. Torque the bolts to 20 – 38 Nm (15 – 28 lb.ft).

135 Final Assembly

a. Dip the ends of the drive yokes in oil OEP-220 and position on the input shaft and through shaft of the intermiediate carrier and the input shaft of the rear carrier.

NOTE: Before installing the yoke on the input shaft on the intermediate carrier ensure the yoke to bearing spacer is installed.

b. Install the clamp plates and self-locking retaining bolts. Torque the bolts to 650 – 705 Nm (480 – 520 lb.ft).

c. Before proceeding further, check that the components of the carrier turn freely and smoothly without binding or emitting unusual noises. If unusual binding or an unusual noise is heard, locate and rectify the cause of the problem.

d. Apply a bead of Silastic (732 RTV) sealant approximately 3.175 – 4.762 mm (0.1250 – 0.1875 in.) wide around the carrier mounting face of the axle housing, then mount the carrier on the axle housing.

e. Install the carrier retaining bolts and washers. Torque the bolts to 182 – 190 Nm (134 – 140 lb.ft).

f. Lightly lubricate the O-ring for the bevel compartment cover and install into the groove provided in the cover.

g. Install the cover retaining bolts and torque to 24 – 38 Nm (18 – 28 lb.ft).

h. After the cover has been installed, add OEP-220 to the power divider (intermediate carrier) the carrier housing and the axle housing.



## BOGIE AXLE ASSEMBLY

136 Removal

a. Remove the fuel tank as described in (EMEI VEH G 703 — Group 4)

b. Remove the rear toolbox mounting straps and remove the toolbox.

c. Disconnect the electrical wiring from the junction box (located inside the rear of the left-hand chassis rail forward of the rear crossmember), and remove the junction box.

d. Remove the air lines at the rear crossmember.

e. Remove the rear crossmember.

f. Remove the transfer case to intermediate carrier propeller shaft.

g. Chock the front wheels and release the spring brakes using the release studs.

h. Remove the brackets retaining the wiring and air lines to the chassis, between the rear crossmember and just forward of the bogie pedestal.

i. Remove the air line "T" junctions (three off) from the chassis rails to the rear of the bogie pedestal.

j. Disconnect the axle breather hoses (two off), the power divider lock out air line, and 4 brake air lines.

k. Remove the air lines connected to the reserve air tank.

l. Remove the eight bolts securing the crossmember located between the bogie pedestal and the rear crossmember and remove the crossmember towards the rear of the vehicle, carefully feeding electrical wiring and airlines through as the crossmember is removed.

m. Support the chassis with suitable stands, forward of the bogie assembly.

n. Remove the rear axle bump stops from the chassis rails.

o. Remove the sixteen bolts securing the bogie pedestal to the chassis rails.

NOTE: These bolts have an interference fit, and care should be taken to avoid damaging the threads when removing.

p. With the aid of a porta-power or similar equipment, spread the chassis rails slightly at the rear of the bogie.

NOTE: It may be necessary to remove several of the cargo tray mounting bolts to allow the chassis rails to spread.

q. With the chassis rails spread slightly, remove the two spacer plates from each side, located between the bogie pedestal and the chassis rails.

r. Remove the spreading device.

s. The whole bogie assembly can now be drawn to the rear of the vehicle, while carefully feeding air and fuel lines and electrical wiring through the pedestal.

137 Installation

a. Install the bogie axle assembly in the reverse order of removal.

# GROUP 10 — FRONT AXLE

## FRONT DIFFERENTIAL OVERHAUL

138 Disassembly

NOTE: Unless otherwise stated, all numbers in parentheses ( ) refer to illustration numbers in Figure 345.

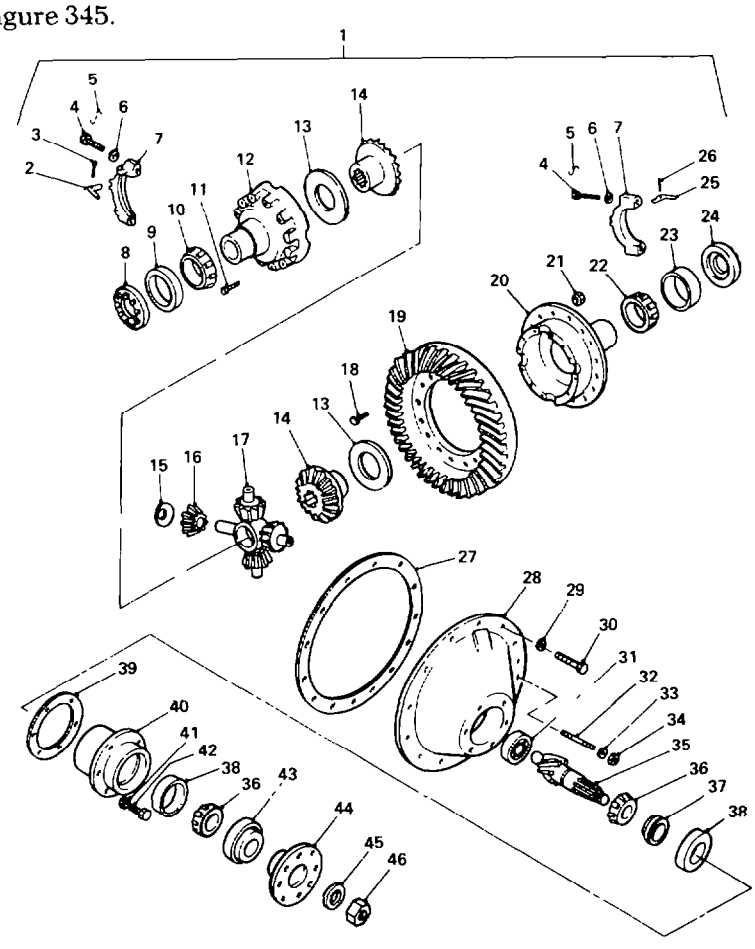


Fig. 345 — Differential Carrier — Exploded View — Eaton Model 18123

1. Front Differential Assembly
2. Bearing Adjuster Lock
3. Split Pin
4. Bearing Cap Retaining Bolt
5. Lockwire
6. Washer
7. Bearing Cap
8. Bearing Adjuster
9. Bearing Cup
10. Bearing Cone
11. Retaining Bolt
12. Plain Differential Case
13. Thrust Washer
14. Side Gear
15. Thrust Washer
16. Side Pinion Gear
17. Spider
18. Crown Wheel Retaining Bolt
19. Crown Wheel
20. Flanged Differential Case
21. Nut
22. Bearing Cone
23. Bearing Cup
24. Bearing Adjuster
25. Bearing Adjuster Lock
26. Split Pin
27. Gasket
28. Differential Housing
29. Washer
30. Bolt
31. Pinion Pilot Bearing
32. Stud
33. Spring Washer
34. Nut
35. Pinion Shaft
36. Pinion Inner/Outer Bearing Cone
37. Spacer
38. Pinion Inner/Outer Bearing Cup
39. Shim
40. Pinion Bearing Cage
41. Lock Washer
42. Bolt
43. Oil Seal Retainer
44. Drive Flange
45. Washer
46. Nut

a. Having removed the front differential (refer to EMEI VEH G 704 — Group 10), clean the differential assembly using a recommended cleaning agent then blow-dry the assembly using compressed air; secure the assembly in a suitable differential stand.

NOTE: Before removing the bearing caps from the carrier bearing pedestals, match mark the positions of the bearing caps in relation to the carrier pedestals and also match mark the bearing adjusters to indicate the correct location of the adjuster lock-tabs.

b. Cut the locking wire (fig. 345, item 5) then remove the bolts (item 4) securing the bearing caps (item 7) to the carrier pedestals (item 28); remove the bearing caps, bearing adjusters (item 8) and bearing cups (item 9).

c. Insert a suitable bar or rod stock through the differential then using an overhead lifting device, remove the differential from the carrier (see fig. 346).

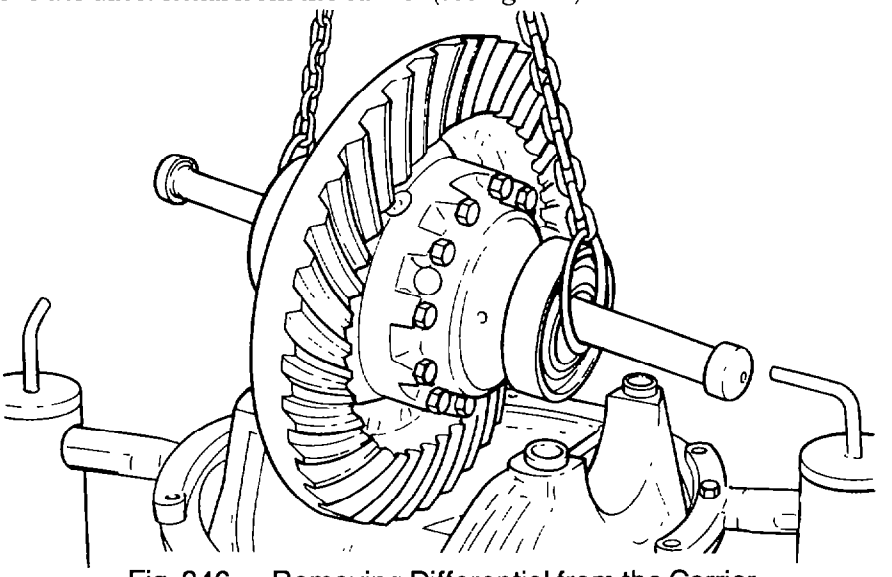

Fig. 346 — Removing Differential from the Carrier

d. Remove the bolts (item 42) and washers (item 41) securing the pinion cage (item 40) to the carrier (item 28); use a hammer and brass or soft drift to drive the pinion assembly out of the carrier. DO NOT allow the pinion assembly to fall onto the ground or other hard surface. Take note of the thickness and number of the shim (item 39) under the flange on the pinion cage, for easier adjustment during reassembly.

e. Secure the drive flange (item 44) in a bench vice then remove the locknut (item 46) and washer (item 45) from the assembly; use a soft drift and hammer to drive the pinion shaft from the flange; DO NOT allow the pinion shaft to fall onto the ground or other hard surface.

f. Remove the inner and outer bearing cups (item 38) from the pinion cage, after removing the oil seal (item 43).

g. Remove the spacer (item 37) from the pinion shaft, then using a press and suitable collar, remove the inner pinion bearing (item 36) and pilot bearing (item 31) from the pinion shaft (see fig. 347).

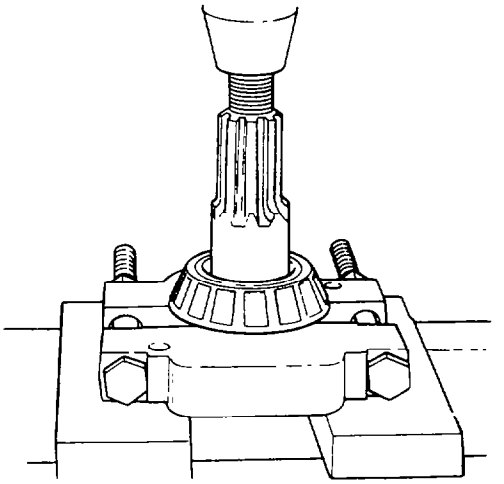

Fig. 347 — Removing Inner Pinion Bearing

NOTE: Before dismantling the differential, match mark the differential cases for later reassembly (see fig. 348).

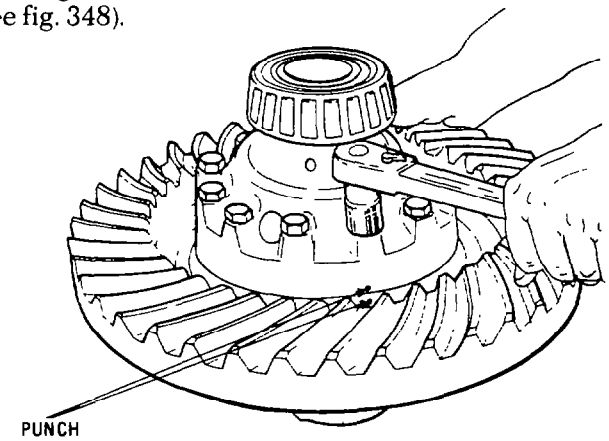


Fig. 348 — Dismantling Cases

h. Cut and remove the locking wire, then remove the bolts (item 11) holding the assembly together; remove the plain differential case (item 12) from the assembly.

i. Remove the side gear (item 14) and thrust washer (item 13) from the spider (item 17), then remove the spider together with the pinion gears (item 16) and thrust washers (item 15); remove the remaining side gear (see fig. 349).

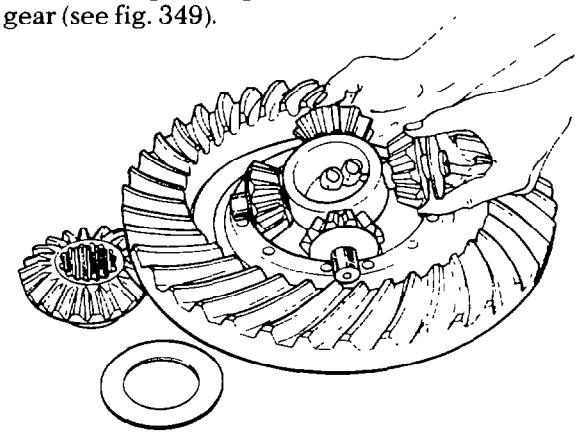

Fig. 349 — Removing Differential Internal Components

j. Remove the bolts (item 18) and nuts (item 21) securing the flanged differential case (item 20) to the crownwheel (item 19); remove the crownwheel from the case.

k. Remove the bearings (items 22 and 10) from both differential cases (items 12 and 20) using a suitable puller and collar (see fig. 350).

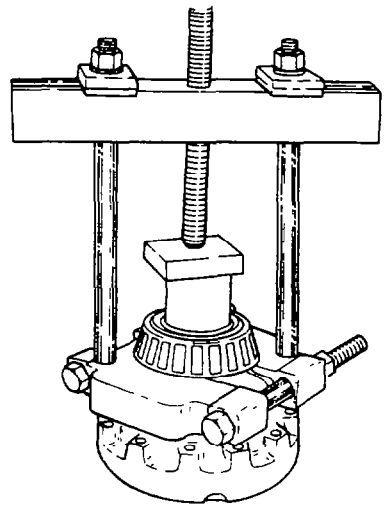

Fig. 350 — Removing Differential Case Bearings

139 Inspection

a. After cleaning with a suitable solvent, inspect all components for wear or damage. Replace parts as necessary.

b. Crack test the crownwheel, pinion, side gears, pinion gears and spider.

NOTE: Crownwheel and pinion are to be replaced as a matched set. Refer to fig. 351.

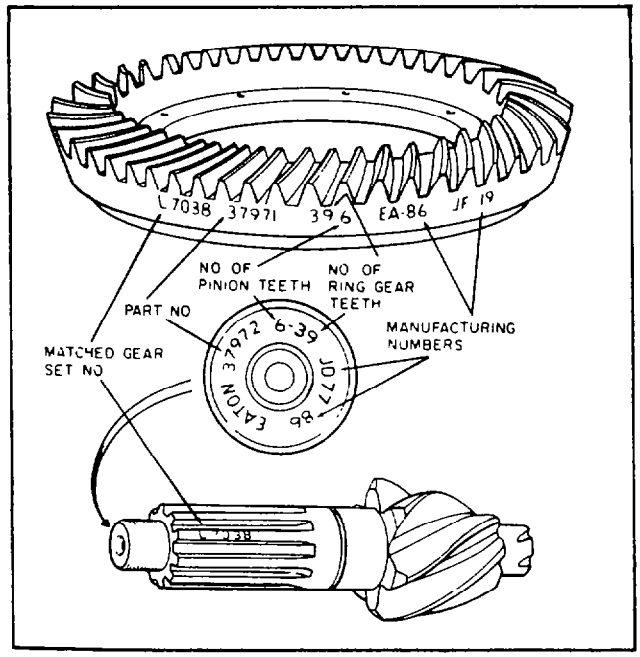


Fig. 351 — Assembly Identification Markings

c. Demagnetise all components that were induction crack tested.

d. Apply a light coat of OEP-220 oil to all components, then cover the components not immediately required with a suitable cover.

**Reassembly of Sub-Assemblies**

NOTE: Unless otherwise stated, all numbers in parentheses ( ) refer to illustration numbers in Figure 345.

140 Pinion Shaft Assembly and Pre-load

a. Press the pilot bearing (item 31) onto the pinion shaft (item 35) then stake the bearing to the shaft at four stake points (see fig. 352).

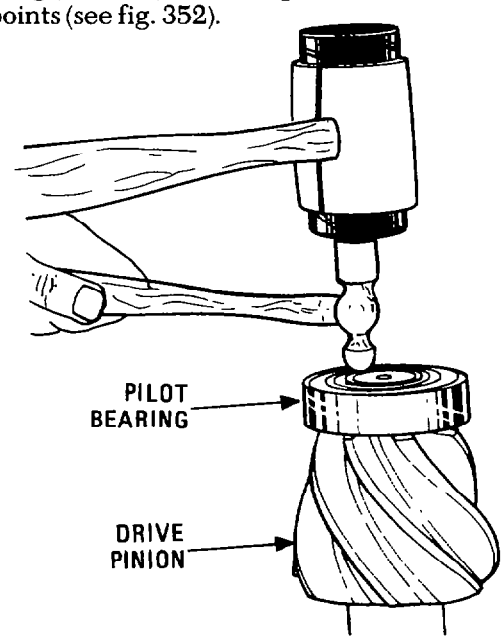


Fig. 352 — Staking Pinion Pilot Bearing

b. Lubricate and press the inner pinion bearing (item 36) onto the pinion shaft. If possible install the bearing spacer (item 37) which was removed at disassembly (see fig. 353). If not, install a spacer with the nominated thickness of 16.205 mm (0.638 in.).

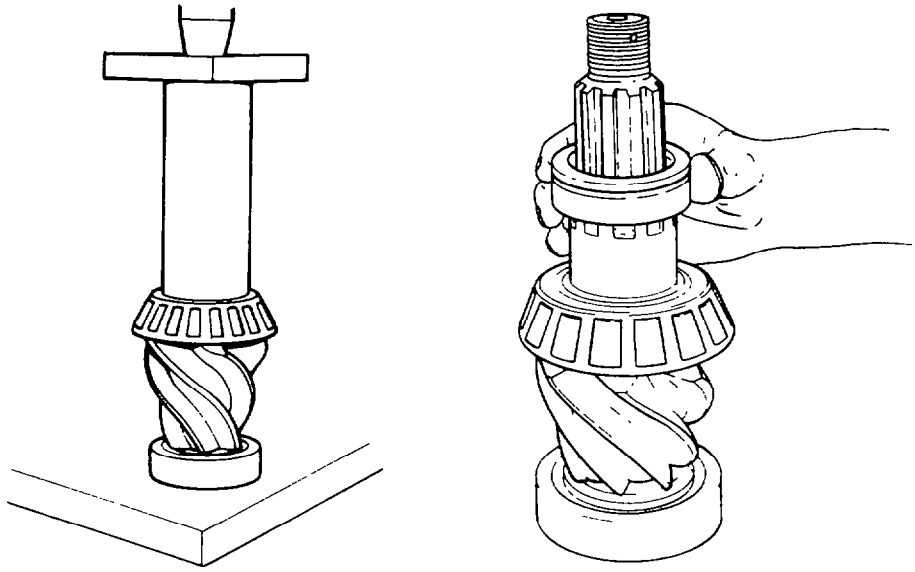

Fig. 353 — Installing Inner Pinion Bearing Cone and Spacer

c. Press the bearing cups (item 38) into the pinion cage (item 40) ensuring that they are correctly seated. Check seating with a 0.025 mm (0.001 in.) feeler gauge as shown in fig. 354.

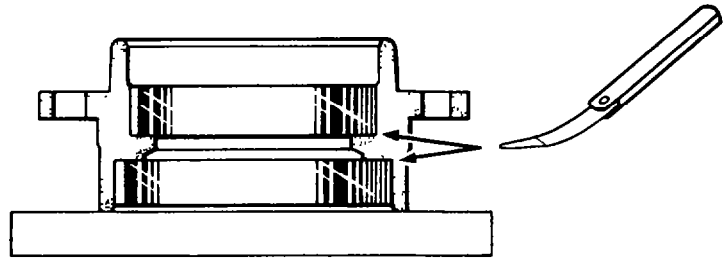

Fig. 354 — Checking Correct Seating of Bearing Cups

d. Fit the pinion shaft into the cage then lubricate and press the outer pinion bearing cone (item 36) onto the shaft. Refer to fig. 355.

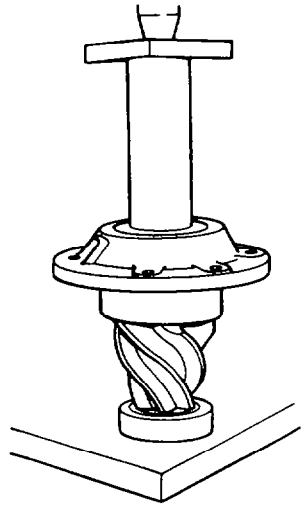

Fig. 355 — Installing Pinion Cage and Outer Bearing

e. While the assembly is in the press, apply a load of 12.7 – 13.6 tonnes (14 – 16 tons) to the back-face of the outer bearing cone.

f. Wrap a cord or soft wire several times around the pinion bearing cage (item 40) and connect a spring scale to one end of the cord. Pull on the spring scale using a steady, even pull until the pinion cage starts to rotate (see fig. 356). The reading on the spring scale should be 3 – 6 kg (6 – 14 lb). If the pre-load in incorrect, use a thicker spacer to decrease the pre-load or a thinner spacer to increase it. Always use the correct size spacer, do not use a shim to increase the spacer thickness.

NOTE: Selective spacers are available in thicknesses ranging from 15.824 mm (0.623 in.) to 16.612 mm (0.654 in.) in increments of 0.025 mm (0.001 in.).

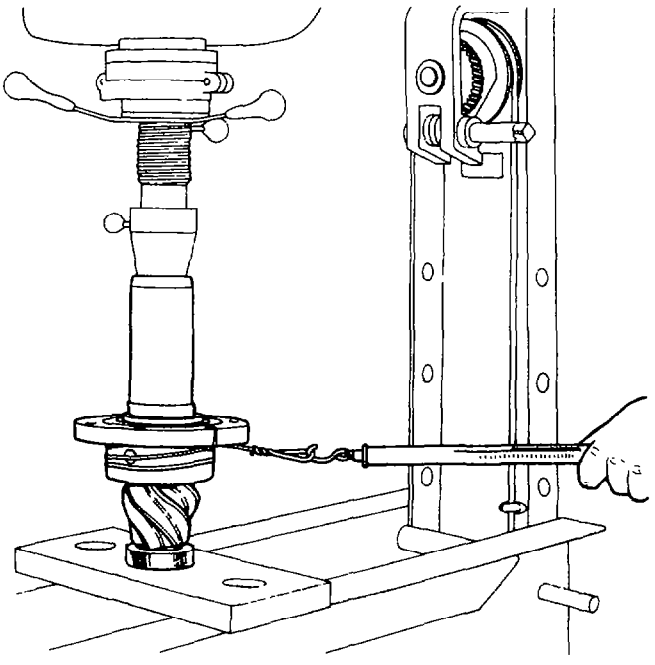

Fig. 356 — Checking Pinion Bearing Pre-load

g. After adjusting the bearing pre-load, fit a new oil seal retainer (item 43) then fit the drive flange (item 44) to the shaft. Fit the washer (item 45) and locknut (item 46) to the shaft and torque the locknut to 650 – 813 Nm (480 – 600 lb.ft).

h. Fit the same thickness shim (item 39) as was removed at disassembly to the pinion cage (item 40) then fit the cage to the carrier (item 28). Install the retaining bolts and lockwashers (items 42 and 41) and torque them to 156 – 169 Nm (115 – 125 lb.ft).

141 Differential and Crownwheel Assembly Pre-load and Backlash

a. Press the bearing cones (items 10 and 22) onto the differential cases (items 12 and 20) using a press and suitable hollow drift or tubing. Refer to fig. 357.

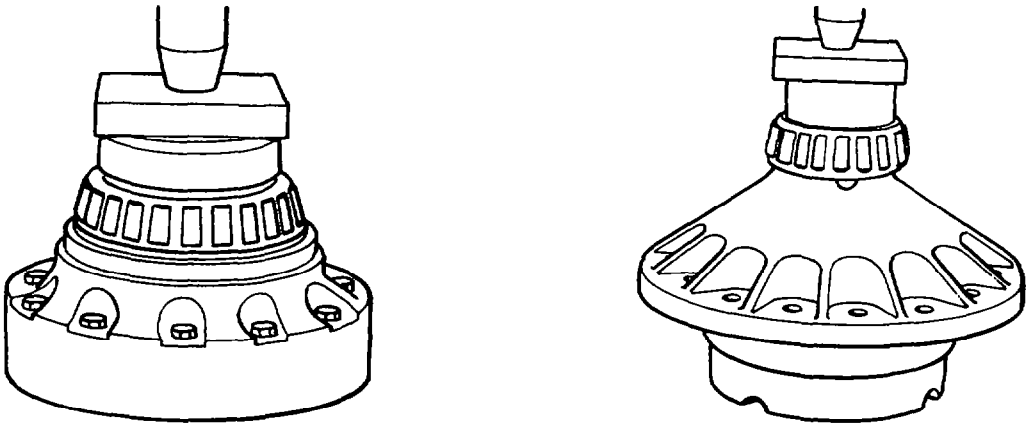

Fig. 357 — Installing Bearing Cones

b. Place the thrust washer (item 13) and side gear (item 14) into the flanged differential case (item 20). Fit the side pinion gears (item 16) and thrust washers (item 15) onto the spider (item 17), then fit the spider unit into the flanged differential case (item 20). Fit the remaining side gear and thrust washer to the spider unit. Refer to fig. 358.

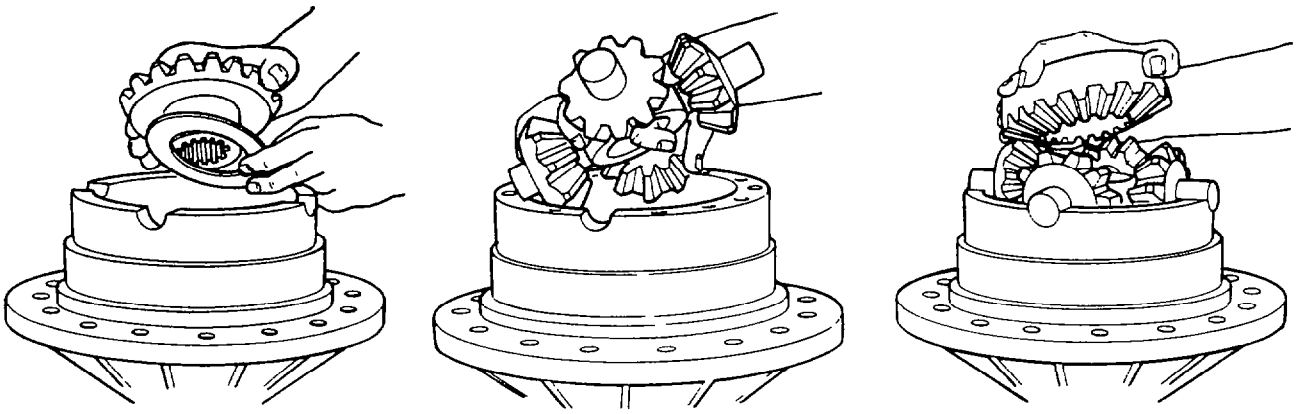

Fig. 358 — Installing Differential Gears

c. Fit the plain differential case (item 12) to the flanged case (item 20) so that the match marks are aligned. If necessary use a nylon hammer to tap the case into its correct position, then install the retaining bolts (item 11) and torque them to 157 - 176 Nm (116 - 130 lb.ft) (see fig. 359). Check the differential for free rotation by turning the side gear hub. A torque of up to 68 Nm (50 lb.ft) may be required to rotate the hub.

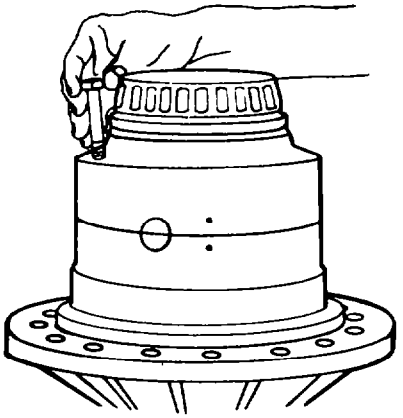

Fig. 359 — Assembling Differential Cases

d. Fit the crownwheel (item 19) over the flanged differential case (item 20); align the bolt holes and install the bolts (item 18) and nuts (item 21) and torque to 244 - 298 Nm (180 - 220 lb.ft). Refer to fig. 360.

NOTE: Ensure that the crownwheel and pinion are a matched set. Refer to fig. 351.

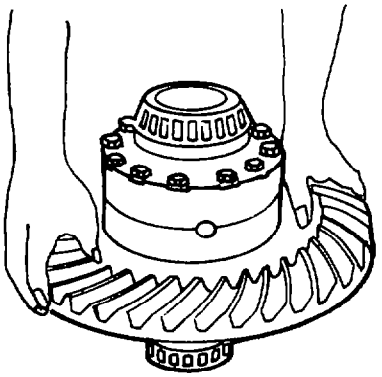

Fig. 360 — Installing Crownwheel to Flanged Differential Case

e. Lubricate the differential bearings, then install the crownwheel and differential assembly in the carrier (item 28). Fit the bearing cups (items 9 and 23), bearing adjusters (items 8 and 24) and the bearing caps (item 7) to the assembly. Install the bearing cap retaining bolts and washers (items 4 and 6) and tighten finger-tight (see fig. 361).

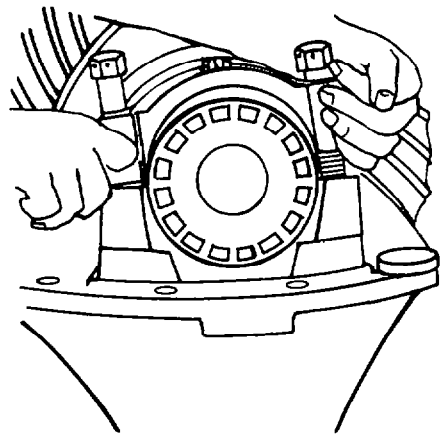

Fig. 361 — Installing Bearing Caps

f. Turn the bearing adjuster on the same side as the crownwheel teeth until the first thread is visible.

g. Tighten the bearing adjuster on the back-face side of the crownwheel until there is no backlash. This can be tested by facing the crownwheel teeth and pushing the crownwheel away from the body while gently rocking the crownwheel from side to side. There should be no free movement.

h. Rotate the crownwheel and check for any point where the crownwheel may bind. If such a point exists, loosen and retighten the back-face adjuster. Make all further adjustments from the point of tightest mesh.

i. To adjust the backlash loosen the bearing adjuster on the back-face of the crownwheel one notch. Tighten the adjuster on the teeth-side of the crownwheel until it contacts the bearing cup. Contact is felt in the form of increased resistance to adjuster movement. Continue to tighten the same adjuster two or three notches, mount a dial indicator on the carrier as shown in fig. 362. The backlash should be between 0.152 – 0.406 mm (0.006 – 0.016 in.). Adjust the bearing adjusters to obtain the correct backlash.

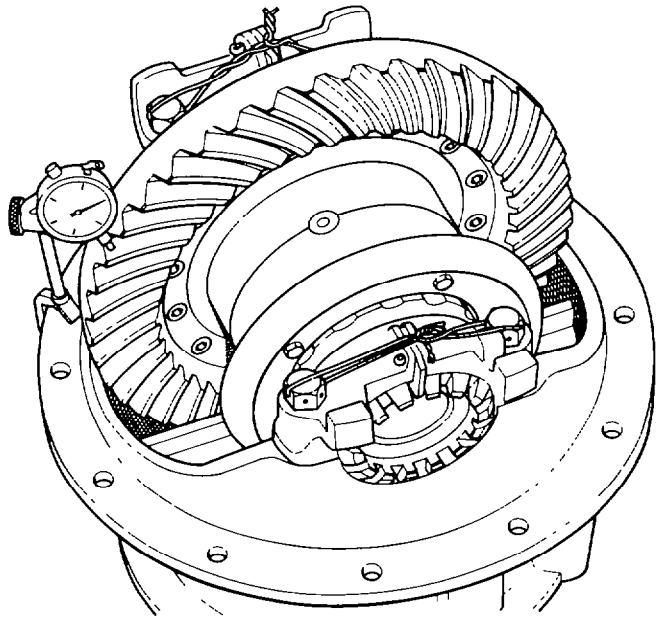

Fig. 362 — Measuring Crownwheel with Dial Indication

j. To add backlash, loosen the adjuster on the back-face of the crownwheel one notch at a time. Tighten the opposite adjuster until it contacts the bearing cup. Continue to tighten the same adjuster two or three notches. Recheck backlash.

k. To remove backlash, loosen the bearing adjuster on the teeth side of the crownwheel one notch at a time. Tighten the opposite adjuster until it contacts the bearing cup. Continue to tighten the same adjuster two or three notches. Recheck backlash.

142 Tooth Contact Pattern

a. Tooth contact pattern consists of lengthwise bearing and profile bearing. The lengthwise bearing is the bearing along the crownwheel tooth while the profile bearing is the bearing up and down the tooth. Refer to fig. 363. In determining correct crownwheel tooth contact, these two types of bearing must be considered separately to obtain the proper results in combination.

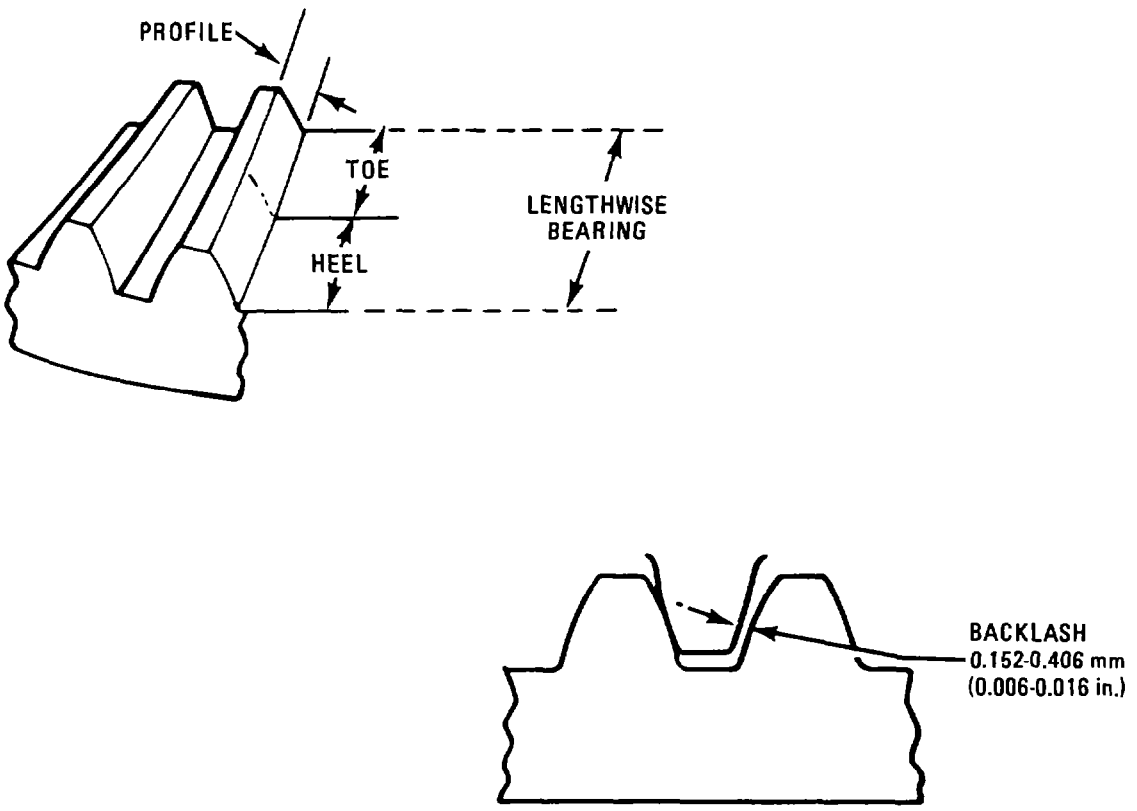


Fig. 363 — Crownwheel Tooth Nomenclature

b. With the differential bearings correctly adjusted, paint approximately twelve crownwheel teeth with engineer's blue. Turn the crownwheel by hand a few revolutions in both directions to obtain an impression of tooth contact. Compare the tooth contact patterns obtained with those shown in fig. 364. If the tooth contact patterns are not correct, move the crownwheel and/or pinion shaft as necessary to adjust for correct pattern. Refer to fig. 365.

NOTE: Crownwheel adjustment affects lengthwise bearing and pinion shaft adjustment affects profile bearing. During any adjustment, ensure that correct tooth contact is made on the drive side of the teeth.

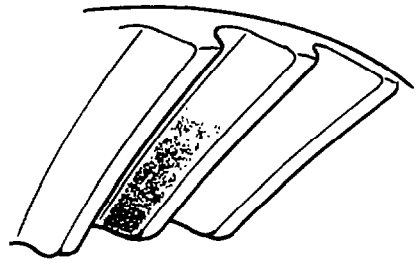

Pattern A — Correct Tooth Contact

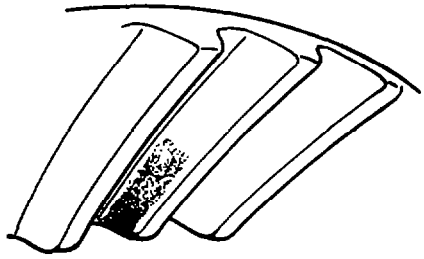

Pattern B — Concentrated Bearing at Toe — Insufficient Backlash. Move crownwheel away from pinion shaft to increase lengthwise bearing. This may change the profile bearing and an adjustment of the pinion shaft may be required.

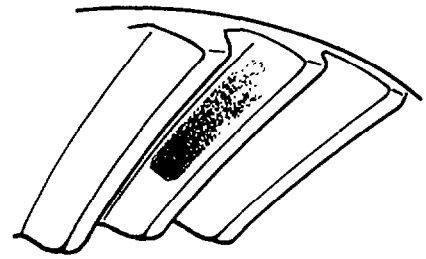

Pattern C — Concentrated Bearing at Heel — Excessive Backlash. Move crownwheel toward pinion shaft to obtain correct lengthwise bearing. This may change the profile bearing and an adjustment of the pinion shaft may be required.

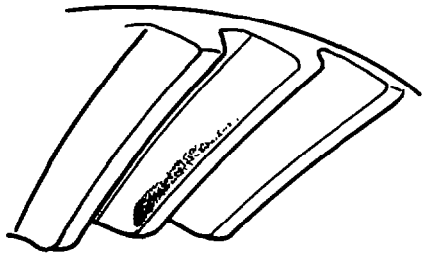

Pattern D — Profile Bearing High. Pinion shaft is out too far. Remove shims to move pinion shaft toward crownwheel. Adjust the crownwheel to obtain correct lengthwise bearing.

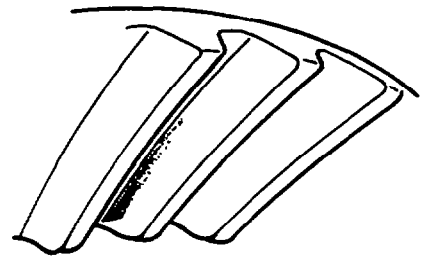

Pattern E — Profile Bearing Low. Pinion shaft is in too far. Add shims to move the pinion shaft away from the crownwheel. Adjust the crownwheel to obtain correct lengthwise bearing.

Fig. 364 — Correct and Incorrect Tooth Contact Patterns

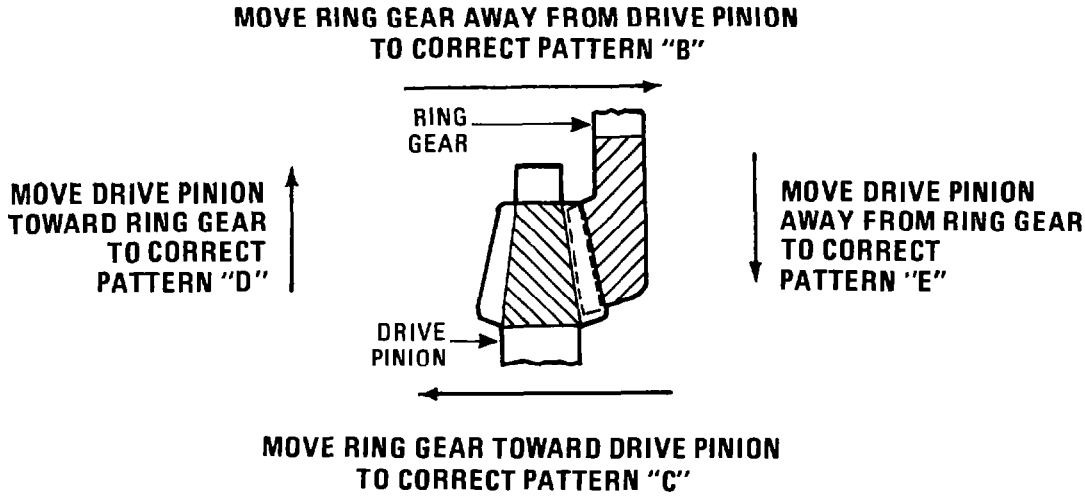


Fig. 365 — Adjustment of Crownwheel and Pinion Shaft to Obtain Correct Tooth Contact Pattern

c. If adjustments have been made to correct the tooth contact pattern, verify that the backlash is still within the 0.152 – 0.406 mm (0.006 – 0.016 in.) tolerance.

d. After the correct backlash and tooth contact patterns have been obtained, torque the bearing cap retaining bolts to 488 – 596 Nm (360 – 440 lb.ft). Install the adjuster locks (items 2 and 25) and split pins (items 3 and 26), then install the lockwire through the bolts to lock them in position.

e. Clean all traces of engineer's blue from the crownwheel and pinion, then apply a coat of OEP-220 oil to those components again.

143 Installation and Storage

a. Install the differential assembly as detailed in EMEI VEH G 704 — Group 10). If the differential is to be stored, insert the assembly into a heavy duty plastic bag, tie the bag securely and return to store.

## STEERABLE DRIVE END

144 Disassembly (see fig. 366)

NOTE: To disassemble the steering drive-end, follow the sequence detailed in paras. a. to v. For removal only, follow the sequence detailed in paras. a. to f. and k. to l. However, before proceeding with paras. k. and l., support the outboard section of the drive-end on a trolley-jack equipped with a suitable cradle.



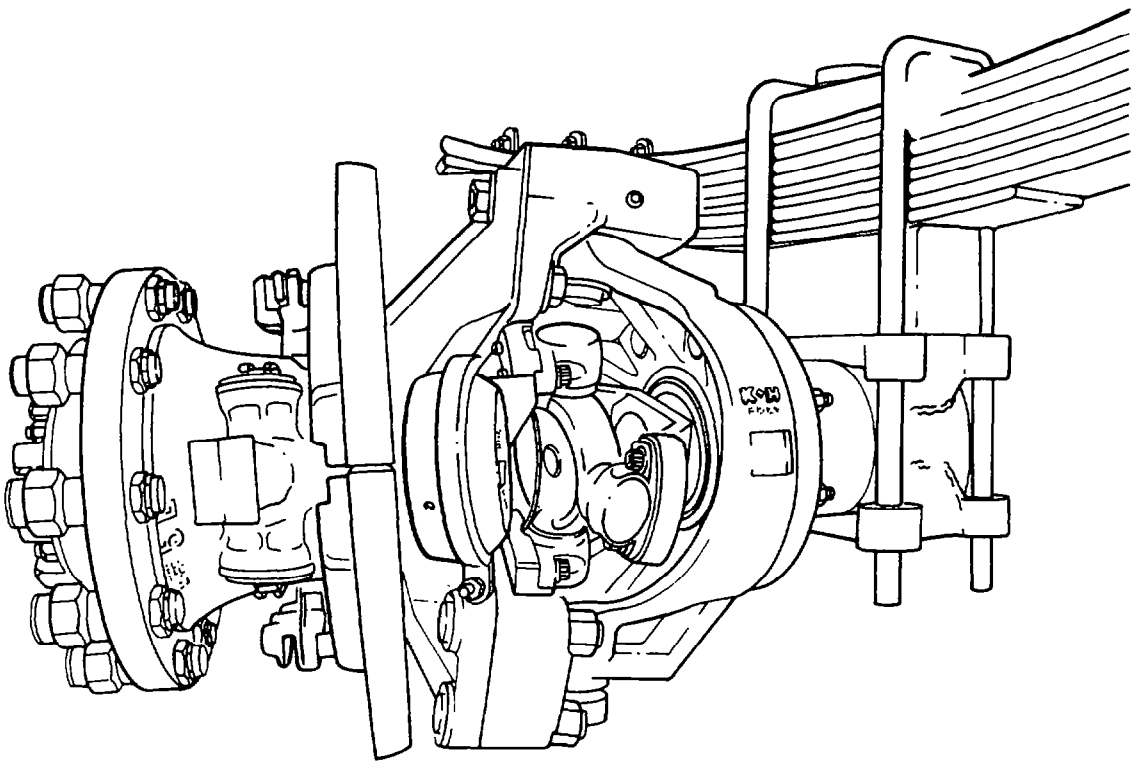

Fig. 366 — Steerable Drive End Assembly

a. Slacken the wheel nuts on the wheel of the affected steerable drive-end.

b. Raise the front of the truck, position chassis stands under the chassis and lower the truck onto the stands.

c. Ensure that the truck is secure, then remove the wheel.

d. Disconnect the brake air lines from the upper ball joint.

e. Remove the split-pin and castellated nut from the tie-rod end. Use a tie-rod puller or lever and hammer to remove the tie-rod end from the steering arm. If necessary, remove the drag link from the steering arm in the same manner.

f. Rotate the drive-end to its full lock position then remove the bolt securing the outer drive-shaft to the drive yoke (see fig. 367).

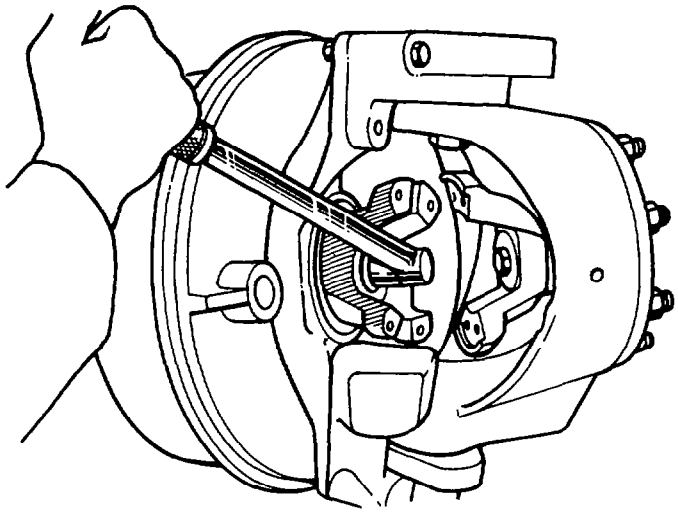

Fig. 367 — Removing Centre Bolt

g. Remove the locknuts and tapered washers from around the drive-shaft flange. Install two ⅜ in. UNF bolts in the two tapped holes provided in the drive-shaft flange. Screw the bolts down evenly and alternately to remove the drive-shaft from the stub-axle tube.

NOTE: The wheel bearings are oil lubricated so there will be a loss of oil when the outer drive-shaft is removed.

h. Remove the brake drum. It may be necessary to remove the dust covers to allow access to the brake shoe adjustment bolts.

i. Remove the hub locknut, locking ring and adjusting nut. Remove the outer bearing then remove the hub.

j. Remove the eight bolts (twelve-pointed) securing the brake assembly and spindle to the spindle yoke (see fig. 368). Remove the brake assembly and spindle.

NOTE: It may be necessary to tap the spindle with a soft-headed hammer to remove it from the spindle yoke.

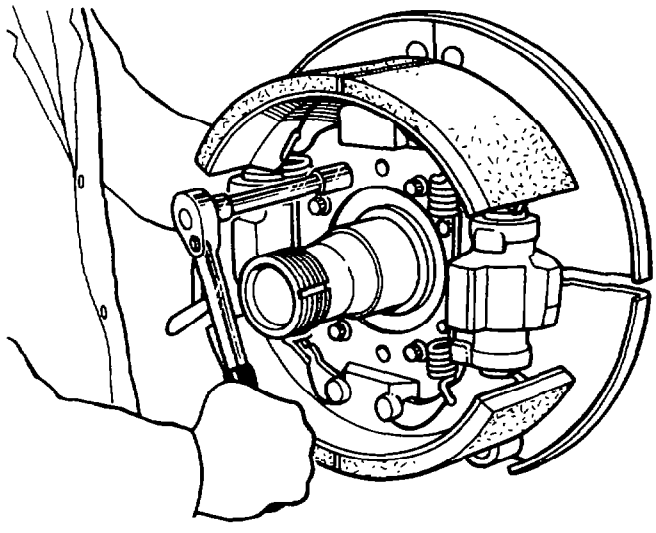

Fig. 368 — Removing Brake Assembly Retaining Bolts

k. Release the locknut securing the lower kingpin ball-stud in position, then back the ball-stud all the way down using a ½ in. Allen key wrench.
l. Support the weight of the spindle yoke then remove the bolts and nuts securing the upper kingpin bracket to the spindle yoke.
m. Lower the spindle yoke and at the same time rotate the top outwards. This will allow the lower kingpin ball to come out of its socket in the yoke.
n. Remove the nuts and bolts securing the lower kingpin bracket to the spindle yoke and remove the bracket from the yoke.
o. Remove the lower kingpin ball-stud locknut, then unscrew the ball-stud from its socket using a ½ in. Allen key wrench.
p. Remove the nuts securing the steering arm to the upper kingpin bracket and remove the arm.
q. Remove the locknut and washer from the upper kingpin ball-stud and remove the upper kingpin bracket from the suspension yoke.
r. Remove the bolts (twelve-pointed) securing the universal joint to the outer and inner drive yokes.
s. Remove the inner yoke and axle as an assembly from the axle housing.
t. Suitably support the inner yoke between two wooden blocks and drive the axle shaft from the yoke with a soft drift and hammer.
u. Remove the nuts and washers securing the suspension yoke to the axle housing and remove the yoke.
v. Use a suitable soft drift and hammer to remove the inner axle seal from the suspension yoke.

145 Inspection

a. Clean and inspect all parts for excessive wear or damage, replace parts as necessary.
b. Clean all bearings using a recommended cleaning agent then blow-dry with compressed air. Inspect the condition of the bearings. If unserviceable replace them. If serviceable lubricate with OEP-220 oil then place them in grease paper or plastic bags until required.
c. Inspect the upper and lower kingpin bushes. If replacement of the lower bush is necessary push the lower bush out of the suspension yoke by pressing the lower kingpin bearing disc out using a suitable drift and arbor press. If the upper kingpin bush is to be replaced, burn the bush with an oxy-acetylene torch after taking the proper precautions. Ensure that the bracket is not overheated.
d. Replace gaskets, oil seals and O-rings with new ones. Ensure all old gasket material is removed before applying or installing new gaskets.



## Reassembly

146 General Precautions for Reassembly

a. To prevent oil leaks, apply Permatex Form-A-Gasket No. 2 pliable setting sealant, or equivalent to all threads on nuts, bolts and studs.
b. Coat all splines and seals with oil (OEP-220), during installation to provide initial lubrication, preventing scoring and galling of components.
c. The manufacturer recommends the use of flanged-end bearing drivers for installing bearings; this type of driver applies equal force to both races and also maintains the correct bearing alignment with the shaft and bore.
d. Apply sealer to the outer edge of the axle inner oil seal then press the assembly into the suspension yoke. Fit the eight studs to the yoke.
e. Install the lower kingpin disc with the large diameter of the grease fitting tapered hole towards the top of the suspension yoke.
f. Use an arbor press to press the lower kingpin bearing into place. DO NOT use the kingpin for this purpose. Lightly lubricate the bearing with engine oil then install the O-ring.
g. Apply a coating of "Fastac" or silicone sealer to one side of the axle housing flange gasket, then attach the gasket to the axle housing flange.
h. Fit the suspension yoke to the axle housing, then fit the hardened washers and nuts; torque the nuts to 339 Nm (250 lb.ft).
i. Fit a new O-ring and upper kingpin bearing (if required) to the upper kingpin bracket; lubricate the inside of the socket for the ball-stud as well as the ball-stud with OEP-220; insert the ball-stud through the bearing and bracket and into the tapered hole in the suspension yoke. Fit the washer and locknut then tighten the nut to 339 Nm (250 lb.ft).

j. The universal joint yoke for the inner drive-shaft contains a split ring at the other end of the splined bore. Position the yoke on the inner drive-shaft then with a block of wood directly beneath the shaft, raise the shaft approximately half a metre and allow it to fall vertically onto the block. This action should drive the ring into position on the end of the drive-shaft; repeat as necessary until the ring is seated on the shaft (see fig. 369).

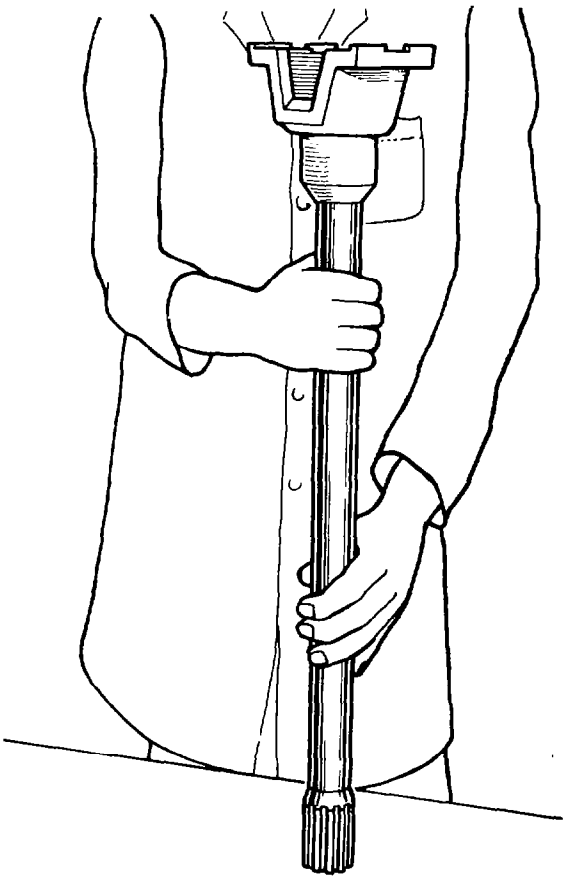

Fig. 369 — Driving Split Ring into Position

k. Fit the yoke centre bolt through the sealing washer and thrust washer (see fig. 370). Fit the bolt and washers into position in the yoke and torque the bolt to 169 Nm (125 lb.ft).

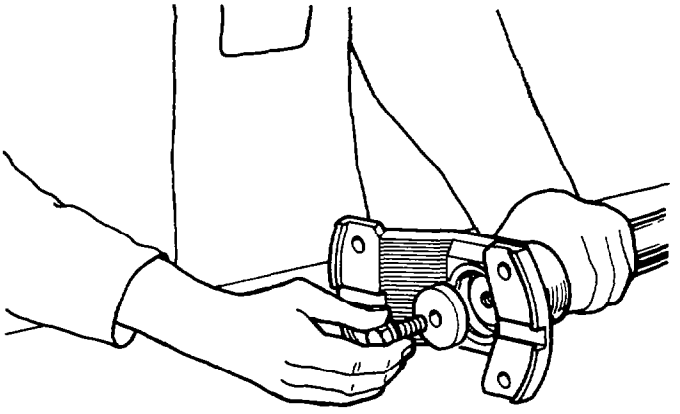

Fig. 370 — Fitting Washer and Centre Bolt

l. Insert the drive-shaft into the axle housing (see fig. 371); rotate the shaft until the splines on the end of the shaft mesh with the splines in the differential side gears then push the shaft fully home into the housing.

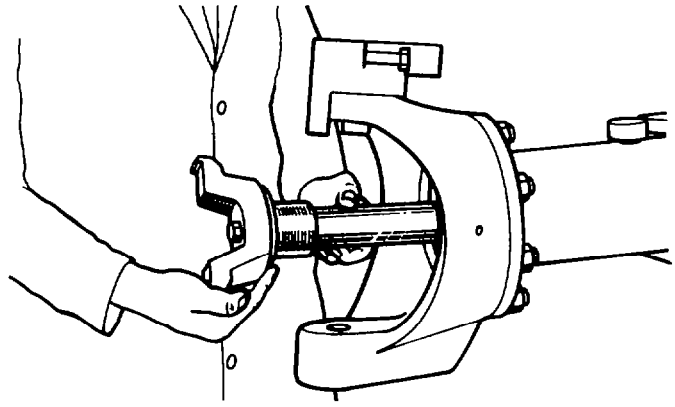

Fig. 371 — Installing Drive-shaft

m. Lubricate the spindle bearing with fresh OEP-220 oil then press the bearing into position in the spindle yoke (see fig. 372).

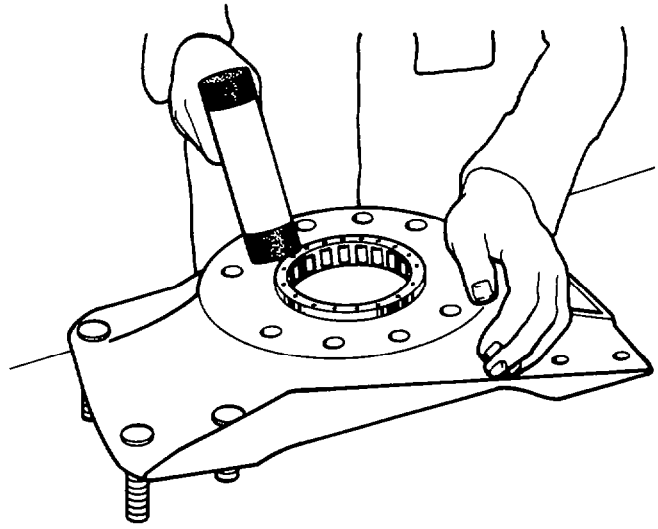

Fig. 372 — Installing Bearing

n. Coat the outer edge of the oil seal with Permatex then fit the oil seal into position in the yoke; if necessary use a nylon headed hammer to tap around the edges of the seal until it is fully home (see fig. 373).

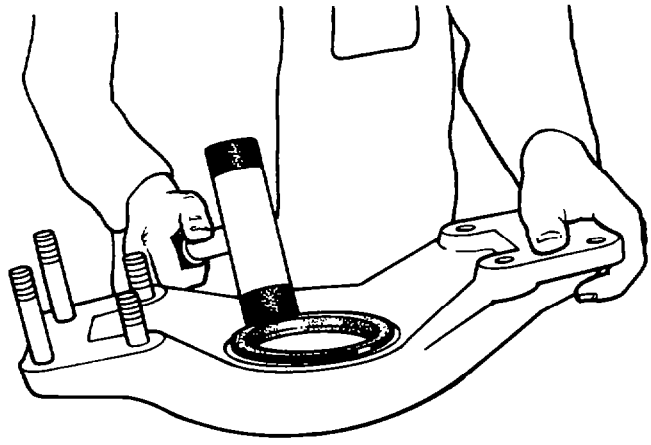

Fig. 373 — Fitting Oil Seal

o. Rest the spindle yoke with its inboard side down then install the lower kingpin mounting studs (see fig. 374).

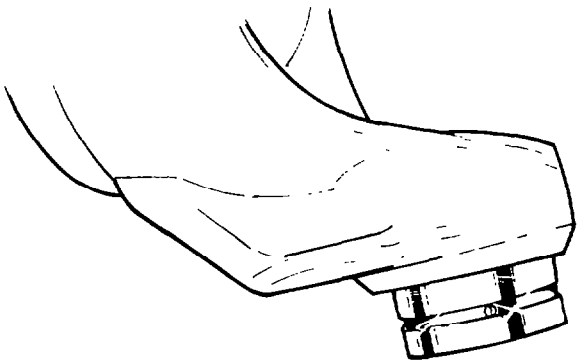

Fig. 374 — Installing Lower Kingpin Mounting Stud

p. Screw the lower kingpin ball-stud into the lower kingpin bracket until the ball-stud just bottoms in the bracket.
q. Position the bracket on the studs projecting from the spindle yoke, then fit the washers and locknuts; torque the nuts to 149 Nm (110 lb.ft) (see fig. 375).

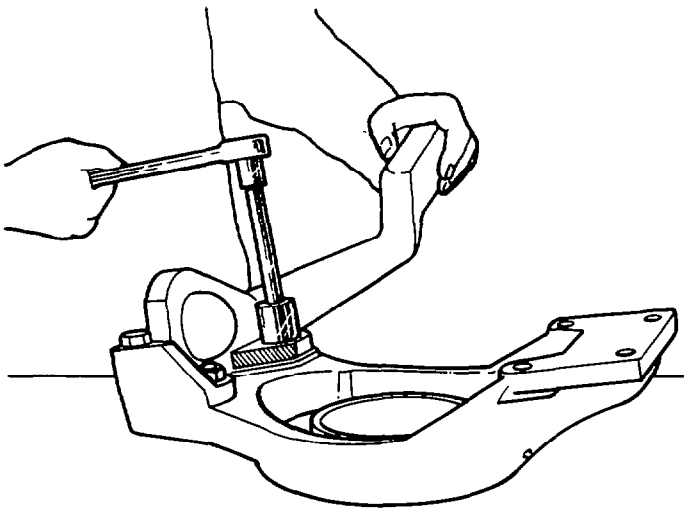

Fig. 375 — Fitting Steering Arm and Kingpin Bracket

r. Coat the lower kingpin ball with OEP-220 oil. With the spindle yoke upright and horizontal, position the lower kingpin ball under the ball socket in the suspension yoke.
s. Tilt the spindle yoke slightly outwards at the top to allow the ball to enter its socket; raise the spindle yoke until the ball enters the socket, then align the yoke until the bolt holes are in line with those in the upper kingpin bracket; install the camber adjusting shim(s); then install the retaining bolts so that they pass through the camber adjusting shim(s); torque the bolts to 224 Nm (165 lb.ft).
t. Position a new gasket, the spindle and the brake assembly in turn onto the spindle yoke. The gasket and spindle will pilot on the roller bearing and the brake assembly will pilot on the spindle.
u. Align the large hole in the spindle mounting flange with the larger hole in the spindle yoke then install the air brake assembly with the actuators on the horizontal centre line.
v. Install the twelve-pointed bolts then fit the hardened washers and locknuts to the bolts; torque to 270 Nm (200 lb.ft). Fit a new flange gasket to the hub.

w. Install the outer drive-shaft; align the holes in the flange with the hub-studs; position the drive-shaft yoke so that the splines are aligned, then push the shaft fully home in the yoke; install the washer and yoke centre bolt and torque to 169 Nm (125 lb.ft) (see fig. 376).

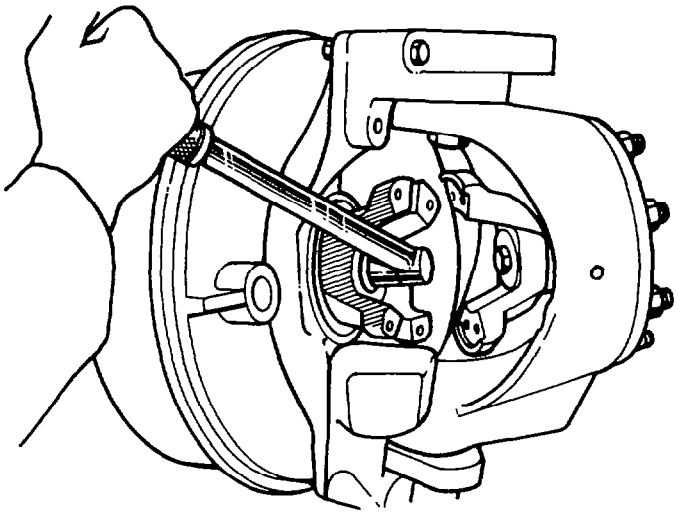

Fig. 376 — Tightening Centre Bolt

x. Fit the bolts, nuts and washers to the collars on the universal joints, clamping them together; torque to 81 Nm (60 lb.ft).
y. Fit the track-rod to the assembly; fit a new castellated nut to the tie-rod end and torque to between 81 Nm and 108 Nm (60 and 80 lb.ft).
z. Fit the spring washers and nuts to the outer drive-axle flange studs and torque the nuts to 68 Nm (50 lb.ft). Install and rotate the brake drum a few times by hand to ensure that there is no binding then move the steerable end from lock to lock to ensure free and smooth movement.
aa. Remove the fill plug located in the outer drive-shaft flange, rotate the hub until the hole is in the horizontal position. Fill the hub with OEP-220 oil until oil starts to seep from the lower edge of the fill hole, then reinstall the fill plug.
ab. Apply XG-274 grease to the upper and lower kingpin grease fittings, until grease starts to exude from between the suspension yoke and the kingpin bracket.

## Kingpin Adjustment

147 a. Loosen the locknut on the lower kingpin ball-stud, then back off the ball-stud as far as it will go.
b. Place a jack directly beneath the spindle yoke then raise the wheel hub, spindle yoke and kingpin bracket assemblies until the upward movement is resisted by the upper kingpin bearing coming into contact against the upper kingpin ball-stud.
c. Place feeler gauges between the lower kingpin bracket and the suspension yoke. The gauges must fill the gap snugly.
d. Turn the lower kingpin ball-stud upwards until the feeler gauges loosen, then back off the ball stud one-quarter of a turn (90°).
e. Tighten the locknut while restraining the ball stud from turning; remove the jack. There will be a small amount of play in the kingpins — this is normal.
f. Install the wheel and torque the wheel nuts (refer to EMEI VEH G 703 — Group 11).
g. Raise the front of the truck, remove the chassis stands, then lower the truck to the ground.
h. Before road testing the truck, start the engine and allow air pressure in the brake system to build. Apply the brakes several times to enable the brake adjustment to return to normal, then road test the truck.

RESERVED

# GROUP 12 — BRAKE SYSTEM

## AIR COMPRESSOR OVERHAUL

148 Disassembly

a. Clean the exterior of the air compressor using a recommended cleaning agent or steam application.

NOTE: Before dismantling the compressor, scribe or match mark the relative positions of the cylinder head and crankcase in relation to the block. Also scribe or match mark the position of the base plate and drive-end of the crankshaft in relation to the crankcase.

b. Remove the retaining bolts securing the cylinder head to the crankcase; tap the cylinder head with a nylon mallet to break the gasket seal, then remove the head from the crankcase.

c. Remove the inlet valve springs from the head then remove the inlet valves from their respective guides (see fig. 377).

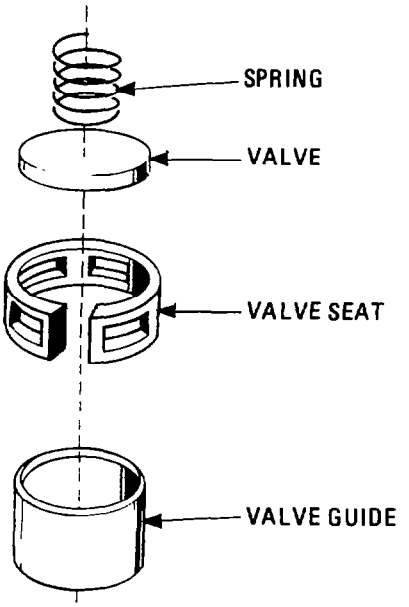


Fig. 377 — Exploded View of Inlet Valve Assembly

d. Remove the inlet valve guides from around the valve seats on the crankcase; taking care not to damage the seals.

e. Remove all gasket material from the cylinder head and crankcase.

f. Unscrew and remove the discharge valve seats, then remove the discharge valves and springs from the head (see fig. 378).

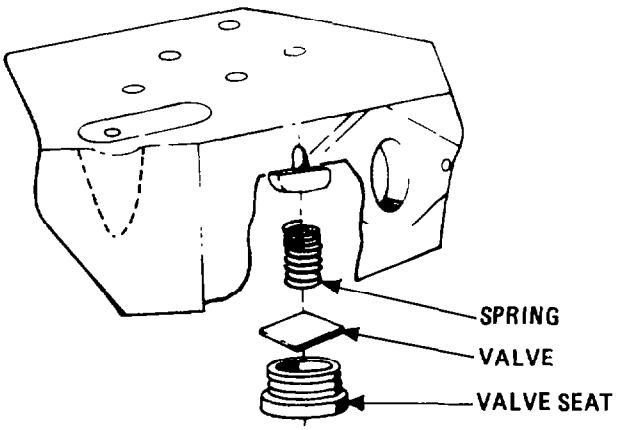


Fig. 378 — Removing Discharge Valve, Valve Stop and Seat

g. Support the machined surface of the cylinder head on the bed of an arbor press then press the discharge valve stops out of the head.

h. Remove the base plate from the crankcase; if necessary tap the plate with a nylon headed hammer to break the gasket bond.

NOTE: Before removing the big-end caps from the connecting rods, match mark each cap and big-end in turn to avoid mixing these components during reassembly.

i. Straighten the tabs on the locking plates then remove the bolts securing the big-end caps to the big-ends of the connecting rods; remove the caps, then push the pistons and connecting rods out of the block.

j. Remove the gudgeon pin locking springs, then press the pins from the pistons and connecting rods.; remove the rings from the pistons; remove the small-end bushes from the connecting rods using a suitable press.

k. Remove the keys from both ends of the crankshaft, the nut securing the drive coupling to the crankshaft and remove the coupling. Remove the bolts securing the drive-end bearing adapter to the crankcase, and remove the adapter, the oil seals from the crankcase and the O-ring from the groove in the adapter.

NOTE: The crankshaft rear-end bearing is of the ball roller type and will require the use of an arbor press to remove the crankshaft and bearing from the crankcase. The drive-end bearing is a sleeve type and is a slip fit on the crankshaft.

l. Remove the bolts securing the rear-end bearing plate to the crankcase, then remove the bearing plate; remove the oil seals from the crankcase and remove the O-ring from the bearing plate; remove both bearings.

m. Use long nosed or snipe nosed pliers to remove the unloader spring, spring saddle and spring seat from the inlet cavity in the crankcase; remove the unloader plungers and guides (see fig. 379).

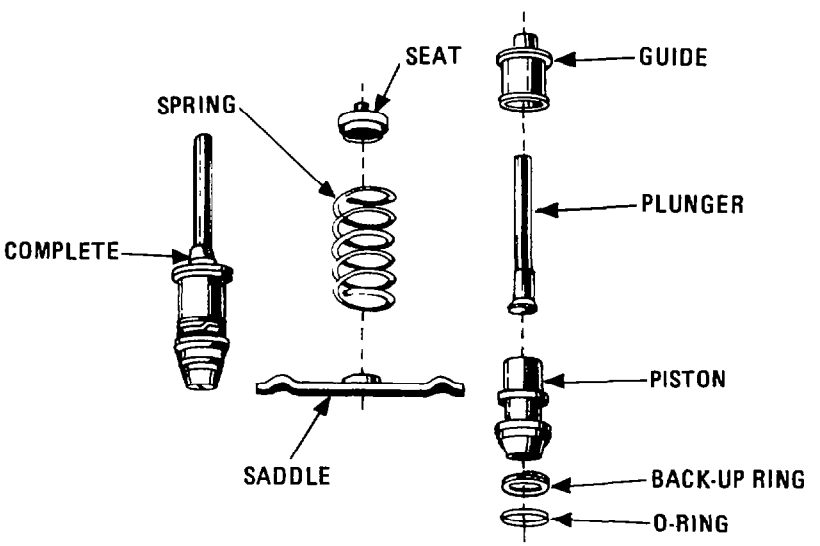


Fig. 379 — Unloader Mechanism

n. Cover the inlet cavity with a thick wad of shop rag or mutton cloth; apply air pressure to the governor mounting pad unloader port and blow the unloader pistons out of their bores into the inlet cavity; remove the unloader pistons.

o. Use a recommended cleaning solvent to clean all components; inspect all components and replace those showing signs of wear or damage.

149 Reassembly

a. Apply a coat of Loctite 75 to the discharge valve stops, then press the stops into position in the cylinder heads; install new discharge valve springs and valves then screw in new valve seats. Discharge valve travel must be between 1.04 and 1.44 mm (0.041 and 0.057 in.).

b. Apply a soapy water solution to the discharge valves; apply 689.5 kPa (100 psi) of air pressure through the discharge port; a slight leakage in the form of soap bubbles is permissible; if excessive, a new head must be obtained.

c. With air pressure still applied to the head, check for leaks around the discharge valve stops which are exposed on the top of the head; no leakage is permitted.

d. Install the inlet valve seats; the dimension from the block to the inlet valve seat must be between 2.56 and 2.87 mm (0.101 and 0.113 in.).

NOTE: Install new crankcase gaskets only where they were removed during dismantling. In-service failure of the compressor will occur if old gaskets are used in disregard of this instruction.

e. Fit the thrust washer onto the crankshaft then place the assembly in the crankcase ensuring that the drive-end of the crankshaft is correctly positioned.

f. Carefully press the crankshaft and bearing into the crankcase, then press the rear-end bearing into the crankcase over the crankshaft.

g. Press the oil seal into the crankcase over the crankshaft then fit the O-ring to the groove in the flange of the bearing plate.

NOTE: Do not fit gaskets between the bearing plate and crankcase.

h. Position the bearing plate against the crankcase so that the match marks are aligned; install the retaining bolts and torque them to between 34 and 41 Nm (25 and 30 lb. ft).

i. Fit the sleeve bearing to the drive-end of the crankshaft then press the oil seal into the crankcase over the crankshaft.

j. Fit the bearing adapter to the crankcase; install the retaining bolts and tighten them to between 34 and 41 Nm (25 and 30 lb.ft); fit the key and drive coupling to the crankshaft; fit the lockplate and nut; torque the nut to 80 Nm (60 lb.ft) then bend the tabs on the lockplate against the nut to lock it in place.

k. Measure the diameter of the gudgeon pin then measure the internal diameter of the small-end bush when fitted in the connecting rod; there must be a clearance of between 0.0025 mm and 0.015 mm (0.0001 and 0.0006 in.). If necessary hone the bushes until within specifications.

l. Lubricate the gudgeon pin, small-end and gudgeon pin bore in the piston with fresh engine oil (OMD-115); fit the pistons over the small-ends, then press the gudgeon pin into position so that the hole for the locking spring in the gudgeon pin aligns with that in the piston.

m. Fit the locking spring through the piston into the gudgeon pin then secure the free end into the hole at the bottom of the piston.

NOTE: Before installing the pistons, stagger the piston rings so that the ring-gaps are approximately 90° apart.

n. Fit new big-end bearing shells to the connecting rods and big-end caps; coat the bearing surfaces with fresh engine oil (OMD-115); coat the pistons, cylinder bores and big-end journals on the crankshaft with fresh engine oil (OMD-115).

o. Compress the piston rings using a suitable ring compressor, then fit the connecting rod and piston in the appropriate cylinder; rotate the crankshaft until the journal immediately below the big-end is at BDC; using a firm, steady pressure, push the piston into the cylinder until the connecting rod contacts the crankshaft.

p. Fit the big-end cap over the crankshaft and to the connecting rod; position the lockplate over the cap then install the retaining bolts and torque them to between 11 and 12 Nm (8 and 9 lb.ft); repeat this procedure for the remaining piston and connecting rod. Bend the tabs on the lockplates against the bolt heads to lock the bolts in position.

NOTE: New unloader pistons are prelubricated and do not require additional lubrication. However, all other components must be lubricated with fresh engine oil (OMD-115) before installation.

q. Fit the unloader pistons into the bores taking care not to cut the O-ring or distort the back-up rings; position the plungers in the guides, then slide the assembly into position over the top of the pistons.

r. Install the unloader spring seat in the inlet cavity (a small hole is drilled in the crankcase for this purpose); position the saddle between the guides for unloader pistons so that the saddle forks are centred on the guides.

s. Install the unloader spring so that it is centred over the spring seats in the crankcase and on the saddle.

t. Install the guides for the inlet valves then fit the valves into the guides; there should be a loose sliding fit between the guides and valves.

u. Install the inlet valve springs; apply a small quantity of grease (XG-274) to the springs to retain them in position, then fit them into the spring bores in the cylinder head.

v. Position the cylinder head gasket on the block, then align the cylinder head on the block; install the retaining bolts and torque them to between 34 and 41 Nm (25 and 30 lb.ft).

w. Lightly coat the base plate gasket with multipurpose grease (XG-274) then attach the gasket to the crankcase; align the base plate on the crankcase then install the retaining bolts; working from the centre bolts outwards, torque the bolts to between 52 and 61 Nm (38 and 45 lb.ft).

x. If the assembly is to be stored, mask or blank-off all openings using suitable blanking caps or masking tape; place the compressor in a heavy duty plastic bag and attach an identification label to the bag.

# GROUP 12

## — FAULT FINDING —

### Air Compressor

| Symptom | Probable Cause | Action |
|---|---|---|
| 1. Excessive build-up and recovery time. | a. Restriction in the compressor inlet or discharge lines. | a. Check the lines for restrictions, and rectify. |
| | b. Leaking or broken discharge valves. | b. Repair or replace the discharge valves. |
| | c. Inlet valves excessively worn or stuck open. | c. Repair or replace the inlet valves. |
| | d. Excessive air system leakage. | d. Repair air leaks. |
| | e. Excessive wear on piston rings and/or cylinders. | e. If necessary, rebore or hone the cylinders and fit new pistons and rings to suit the size of the cylinder bore. |
| 2. Noisy compressor operation. | a. Loose drive gear. | a. Check the condition of the drive gear; replace parts as necessary. Ensure the retaining nut is tightened securely and locked in position. |
| | b. Excessively worn drive coupling. | b. Replace worn parts. Tighten the retaining nut securely and lock in position. |
| | c. Worn or burned-out bearing. | c. Replace the bearings. |
| | d. Excessive wear. | d. Check for worn parts in the compressor. Repair or replace worn parts as necessary. Check for wear in the compressor. |
| | e. Insufficient compressor lubrication. | e. Repair or replace worn or damaged parts as necessary. Ensure that the oil feed and return galleries are clear and free from restriction. |
| | f. Restrictions in the cylinder head or discharge line. | f. Check for restrictions and rectify. |
| 3. Excessive oil consumption. | a. Restriction in the compressor air inlet. | a. Check for restrictions and rectify. |
| | b. Blocked oil return gallery. | b. Rectify. |
| | c. Excessive engine oil pressure. | c. Adjust or replace the engine oil regulating valve. |
| | d. Defective O-ring in the end cover(s). | d. Replace the O-ring(s). |

# — FAULT FINDING —

## Air Compressor cont'd

| Symptom | Probable Cause | Action |
|---|---|---|
| | e. Piston rings improperly installed. | e. Replace the rings and install correctly. |
| | f. Excessive ring or cylinder wear. | f. Rebore or hone the cylinders and fit new pistons and rings to suit the cylinders. |
| 4. The compressor fails to unload. | a. Defective or worn unloader pistons or bores. | a. Replace worn or defective pistons and bushings. |
| | b. Inlet cavity restrictions. | b. Remove restrictions. |
| | c. Defective governor. | c. Repair or replace the governor. |
| | d. Unloader line from the governor kinked, or the cavity beneath the unloader piston restricted. | d. Remove any kinks or replace the unloader line, if necessary. Remove any restrictions from beneath the unloader piston. |
| | e. Binding or kinked unloader mechanism. | e. Repair or replace the unloader mechanism. |

RESERVED

# GROUP 15 — ELECTRICAL

## GENERATOR OVERHAUL

150 Fig. 380 illustrates the generator fitted to the truck, cargo. Overhaul of the generator and sub-assemblies is to be carried out by the Ordinance Factory, Maribyrnong. However, minor repairs to the stator and regulator assemblies can be performed as Base level.

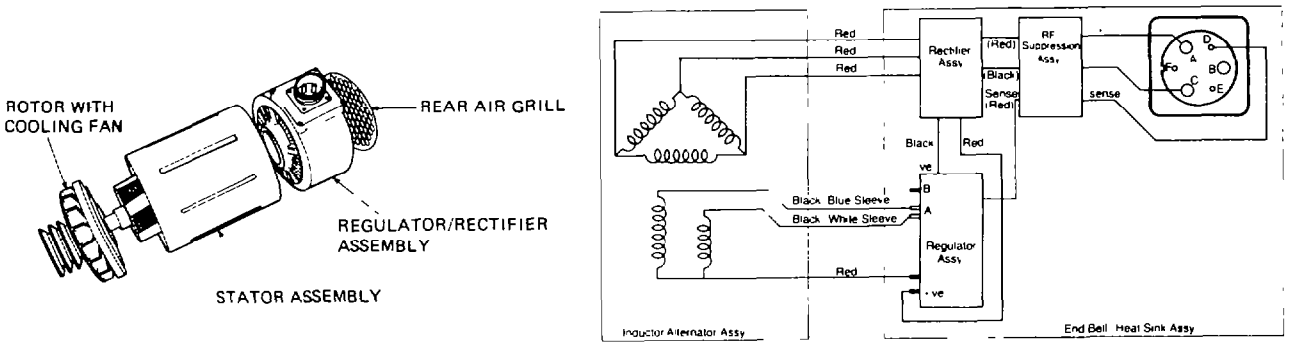


Fig. 380 — Generator Components and Wiring

151 Stator Assembly

a. Visually check the windings and connecting terminals for damage and security.
b. Test the windings for open circuits using the Multimeter, Aust. No. 2.
c. Test for short circuits to earth using the Megohmeter on the 100V scale.
d. Test for short circuits between turns and short circuits between windings, using the Prufrex tester.

Only minor damage or faults, located when carrying out the checks detailed in sub-para. a. are to be rectified by the base workshops. In instances where a fault is indicated by the tests detailed in sub-paras b. to d. the stator assembly is to be submitted to the Ordinance Factory, Maribyrnong, for repair.

152 Regulator

a. Visually check all terminals and wiring to ensure a good electrical connection.
b. Individually test each component for correct operation and value.

Faulty components or connections are to be replaced or repaired as required. After testing, the regulator assembly is to be reinstalled on the generator and tested for correct operation under load. Fig. 381 is included as an aid to circuit tracing and shows the component types and values.

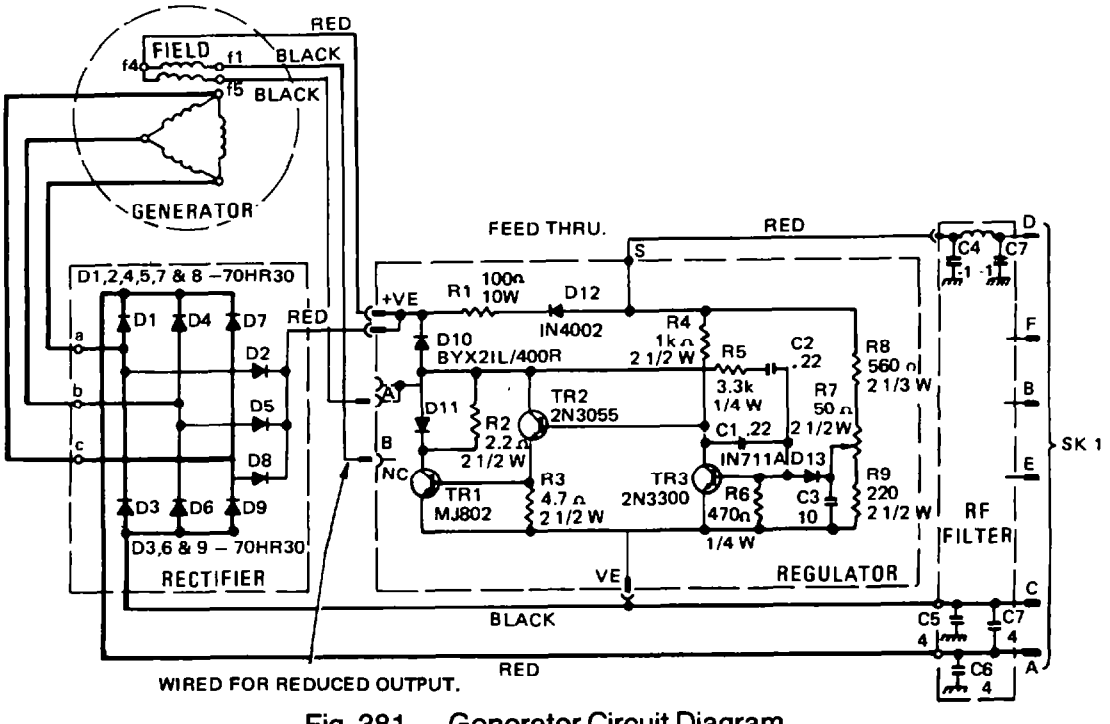


Fig. 381 — Generator Circuit Diagram

## WIRING HARNESS

153 General Precautions

a. Use suitable testing meters or circuit testers to trace or locate faults or check circuits. The practice of arcing wires to earth to determine if the wire is live, will destroy solid state components.

b. After tracing electrical faults and before carrying out any electrical repairs, disconnect the batteries; disconnect the negative terminal first, then disconnect the positive terminal.

c. Before carrying out any electrical arc welding on the truck, disconnect the batteries and disconnect the generator at the cannon connector. Failure to disconnect the generator will cause the transistors and diodes to fail as a result of current flow throughout the chassis when arc welding.

d. When installing batteries, ensure that the terminals are connected to the correct posts. Reversing battery polarity will cause serious damage to components in a fraction of a second without exterior indication on the equipment — the components simply cease functioning.

154 Engine Wiring Harness — Replacement

a. Disconnect the batteries; first disconnect the negative terminal then disconnect the positive terminal.

NOTE: All electrical wiring in the truck is colour-coded for identification and reference. If necessary, refer to the wiring diagram at the end of this manual, in conjunction with the relevant illustration when replacing a wiring harness.

b. After determining which harness is to be replaced, refer to fig. 382, disconnect the harness. As an added precaution and to assist in installation of the replacement harness, tag-mark each wire and terminal in turn as the wire is disconnected. Disconnect the zip clamps and brackets, then remove the harness from the truck.

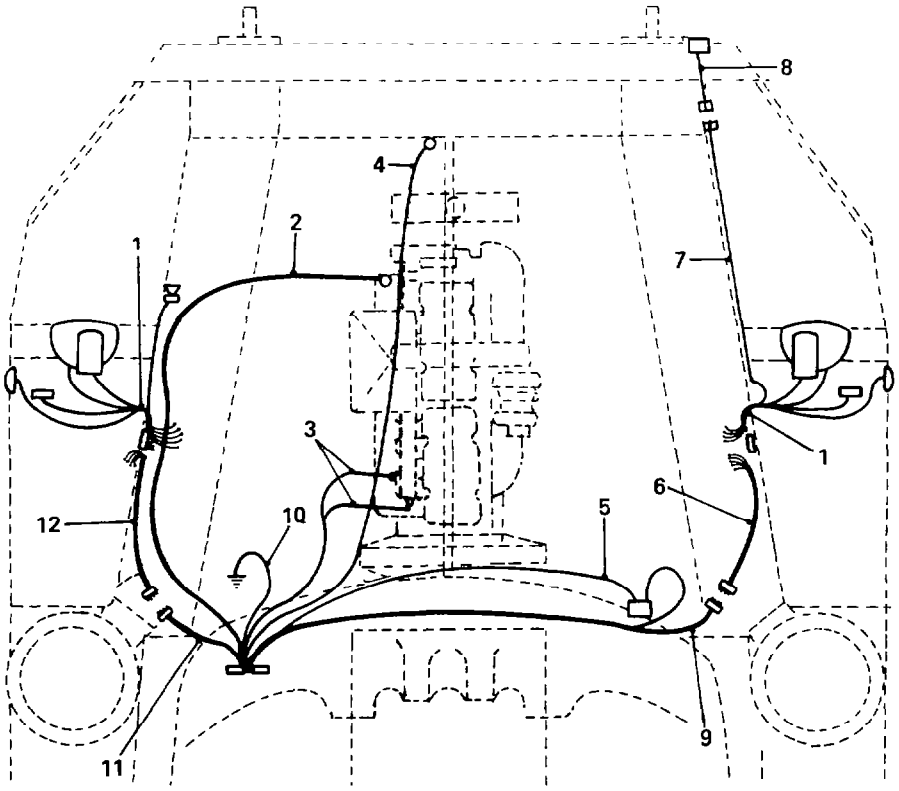


Fig. 382 — Engine Wiring Harness

c. Ensure that the replacement harness is of the correct capacity and that the wires are correctly colour coded. Using the old harness and tag-marks as a guide, connect the wires to the appropriate terminals.

d. Fit and tighten the zip clamps and brackets, then connect the batteries. Connect the positive terminal first, then connect the negative terminal.

e. Test the function of the components associated with the wiring harness that has been replaced, to ensure correct operation.

155 Main Wiring Harness — Replacement

a. The replacement procedure for the main wiring harness, illustrated in fig. 383, is identical to that detailed for the engine wiring harness (refer to para. 154).

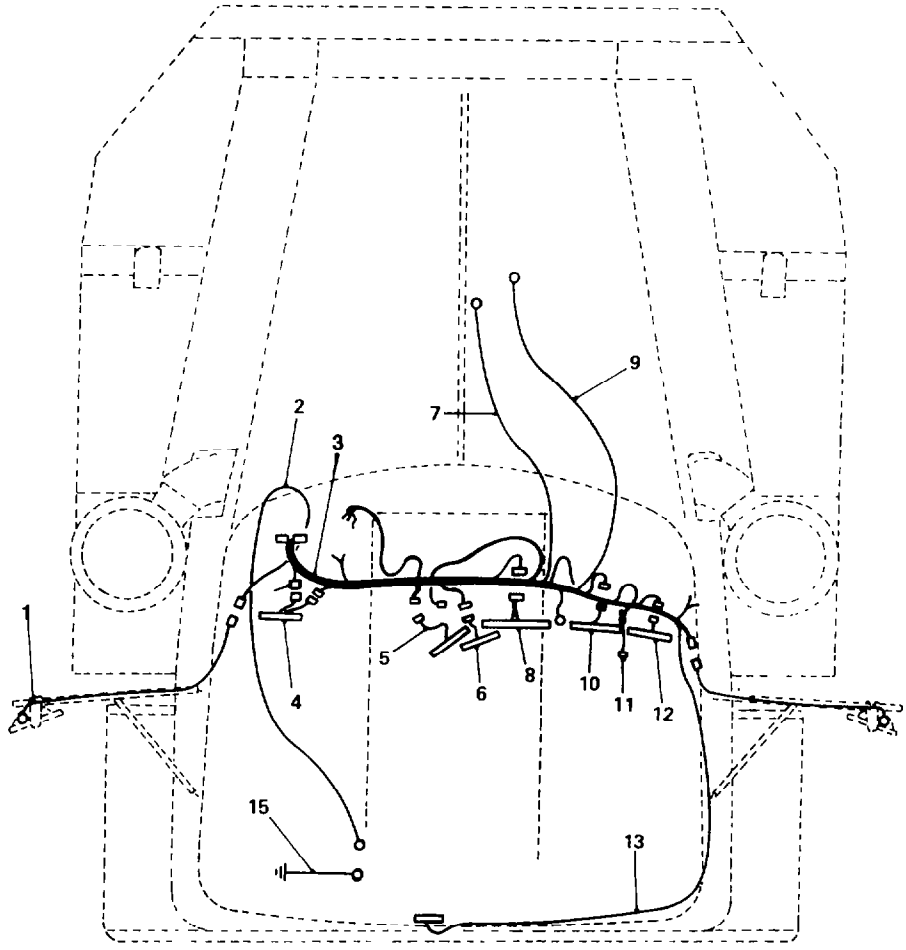


Fig. 383 — Main (Cab) Wiring Harness

156 Rear Wiring Harness — Replacement

a. The replacement procedure for the rear wiring harness, illustrated in fig. 384, is identical to that detailed for the engine wiring harness (refer to para. 154).

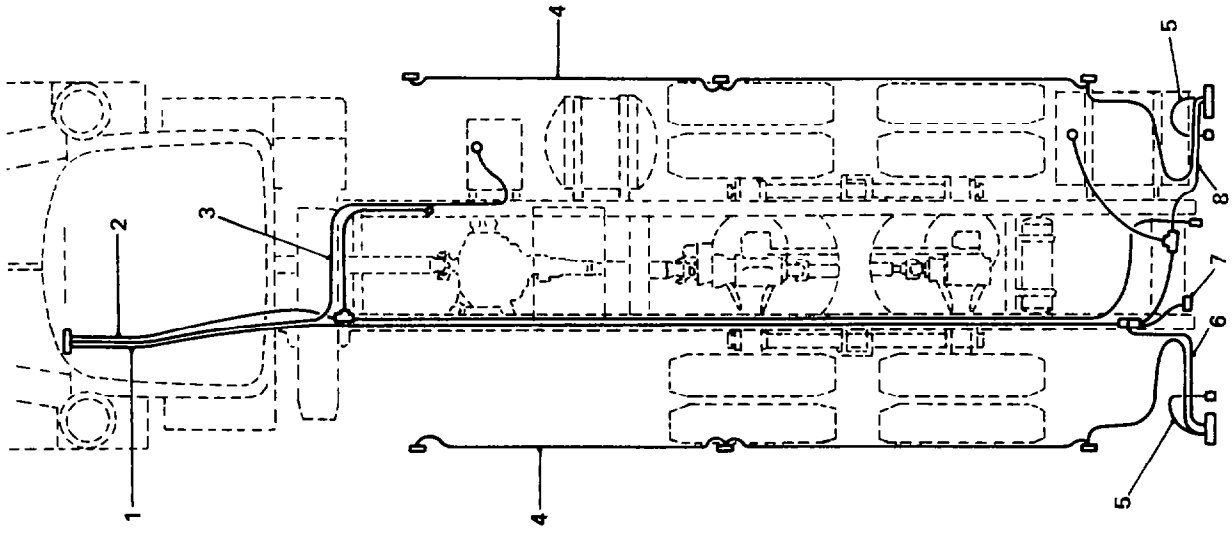


Fig. 384 — Rear Wiring Harness

RESERVED

# GROUP 17 — BODY

## CARGO BODY

157 Removal

a. Remove the three support bracket bolts from the mudguards forward of the rear bogie (both sides of the vehicle).
b. Remove the convoy light assembly from the cargo tray, and support the light with a piece of wire or string.
c. Remove the tail and side light wiring looms from the junction box located inside the left hand chassis rail, forward of the rear crossmember.
d. Disconnect the fuel gauge sender unit wiring, and remove the brackets retaining the wiring to the sender unit and the fuel tank mounting bracket.
e. Install suitable lifting equipment and secure to the cargo body.

NOTE: Depending on the lifting equipment used, it may be necessary to remove the canopy and bow rails.

f. Remove the twenty bolts securing the cargo body to the angle mounting brackets on the chassis rails, and lift the body clear of the chassis.

158 Installation

a. Installation of the cargo body is the reverse of removal, but ensure that the fuel gauge and the tail and side lights function correctly.

## CABIN

159 Removal

a. Having removed the bonnet and mudguards, as described in EMEI VEH G 703 — Group 17, drain the cooling system.
b. Disconnect the wiring from the low-water sensor and from No. 2 terminal on the fifteen-terminal junction box on the left hand side of the firewall.
c. Disconnect the bracket retaining the tachourmeter cable to the radiator tie-bars.
d. Disconnect the right hand air cleaner ducting support bracket from the tie-bars.
e. Remove the radiator tie-bars.
f. Remove the air cleaner ducting and seal the openings.
g. Disconnect the clutch cable from the release lever on the transmission.
h. Disconnect the clutch cable from brackets on the intercooler housing, the oil cooler housing and the flywheel housing.
i. Disconnect the heater hoses at the firewall.
j. Disconnect the wire to the alarm stat (green with white trace) and to the temperature sensor (black).
k. Disconnect the oil gauge pick-up line at the oil filter housing.
l. Cut the necessary "Zip clamps" and disconnect the five air lines at the union nuts located just below the electrical junction box.
m. Disconnect the start air supply line from the inversion valve (green).
n. Disconnect the relay valve pilot line from the solenoid valve (white).
o. Remove the brackets, retaining hoses and electrical cable to the inversion valve mounting bracket.
p. Remove the wiring from the junction boxes, making note of the position of each wire on the junction box.
q. Remove the four bolts from the left hand front cab mounting.
r. Disconnect the lower blue line from the inversion valve.
s. Remove the air cleaner ducting and seal the openings.
t. Remove the pinch bolt from the universal joint at the steering box, and remove the lower section of the steering shaft.
u. Disconnect the two hoses from the air compressor governor.
v. Disconnect the tachourmeter cable at the drive end located below the fuel injection pump, and also the bracket attached to the exhaust manifold.
w. Disconnect the air lines to the cab interior at the firewall (red, green lines).
x. Disconnect the wires from the three switches located on the brake treadle valve, make note of the position of the wires.
y. Remove the axle/transmission breather mounting brackets and the bracket retaining the breather tubes to the firewall.
z. Disconnect the wire from the Dynatard brake solenoid on the rear valve cover.
aa. Disconnect the hand throttle link between the firewall and throttle arm.
ab. Disconnect the engine stop cable from the lever on the injection pump governor.

ac. Disconnect the Dynatard switch wire at the rear of the injection pump governor.
ad. Disconnect the brackets retaining the stop cable and the Dynatard switch wire to the governor and the air compressor.
ae. Remove the pyrometer sender unit from the exhaust pipe.
af. Remove the air lines from the accelerator pedal valve.
ag. Remove the four bolts from the right hand front cab mounting.
ah. Remove the seats complete with risers.
ai. Remove the rubber boots from the gear lever and transfer case shift lever.
aj. Remove the fire extinguisher mounting bracket, and also the butt boxes, then remove the floor mat.
ak. Remove the three nuts retaining the brake pedal to the brake valve and remove the pedal.
al. Remove the gear lever and plug the hole in the transmission.
am. Remove the cabin floor after disconnecting the headlight dip switch wiring.
an. Remove the transfer case shift lever mounting bolts (six off), remove the clevis pin from the linkage and remove the lever.
ao. Disconnect the speedo cable from the transfer case, and remove the "Zip clamps".
ap. Install suitable lifting equipment.
aq. Remove the bolts and nuts from the rear cabin mounting.
ar. Lift the cabin clear of the vehicle, taking care not to snare any of the air lines or wiring as the cabin is lifted.

160 Installation

a. Installation is the reverse of removal.

# GROUP 19 — WINCH

## WINCH OVERHAUL

161 Disassembly

NOTE: Unless otherwise stated, all numbers in parentheses ( ) refer to illustration numbers in Figure 385.

a. Having removed the winch assembly (refer to EMEI VEH G 704 — Group 19), open the drain plug (fig. 385, item 19) on the winch gearbox and allow all oil to drain from the assembly.

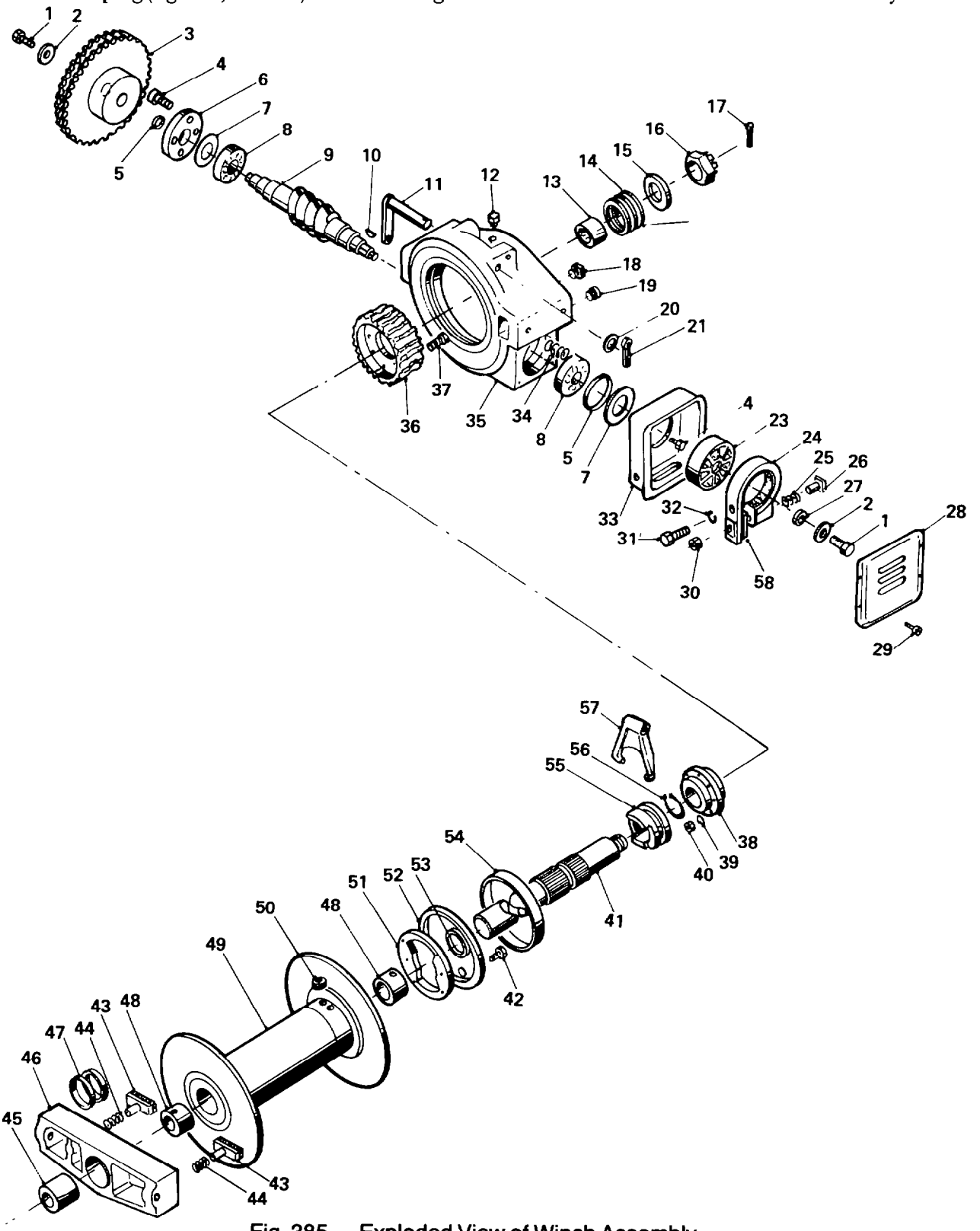


Fig. 385 — Exploded View of Winch Assembly

b. Remove the retaining screws (item 29) then detach the brake cover (item 28).
c. Remove the brake adjusting bolt (item 26), clamp bolts and washers (items 31 and 32), clamp block (item 58), brake band (item 24), adjusting nut (item 30) and spring (item 25).
d. Remove the retaining bolts (item 1) and keeper plates (item 2) from either end of the wormshaft (item 9), then remove the brake hub (item 23), the sprocket (item 3) and their locating keys (item 10).
e. Remove the six bolts securing the front and rear mounting angles to the winch assembly and remove the angles.
f. Remove the end frame (item 46), friction drag brakes (item 43) and springs (item 44).
g. Slide the winch drum (item 49) off the drum shaft (item 41) taking care not to lose the thrust washer (item 53).
h. Using a suitable Allen key, remove the socket-head bolts (item 42) securing the clutch ring (item 51) to the winch drum (item 49).
i. Remove the split pin (item 21) and retaining washer (item 20) then remove the clutch operating lever and shaft (item 11).
j. Slide the dog clutch (item 55) outwards to allow the operating yoke (item 57) to fall clear where it can be removed from the housing.
k. Remove the split pin (item 17), nut (item 16), washer (item 15) and shims (item 14), then remove the winch shaft (item 41) complete with the worm wheel (item 36) and spider (item 57). Remove the six socket-head bolts and separate the spider and work wheel.
l. Remove the eight socket-head bolts (item 4) and both end plates (items 6 and 33), then slide the worm shaft (item 9) out of one end of the housing. The bearing cones (item 8) will come away with the shaft.
m. Remove the bearings from the shaft using a suitable bearing separator and press; remove the bearing cups from the housing.

162 Inspection

a. Inspect the drum shaft for wear on the splines and bush running areas. Replace the shaft if excessive wear is evident.
b. Inspect the end frame bush (item 45), the drag brakes (item 43) and springs (item 44) for wear or damage.
c. Inspect the winch drum bushes (item 48), the clutch ring and dog clutch (items 51 and 55), the worm gear and shaft (items 36 and 9) and bearings.
d. Check the brake hub and band assembly (items 23 and 24), the oil retaining strip (item 52) and bushes (items 54 and 13) for wear.
e. Replace all parts found to be excessively worn or damaged.
f. Replace oil seals (item 5).

163 Reassembly

a. Reassemble the winch in the reverse sequence to disassembly.
b. Always use new circlips, oil seals and O-rings when rebuilding the unit.
c. Use adjusting shims (item 47) to give the winch shaft an end clearance of 0.25 mm (0.010 in.) in the gearcase.
d. When fitting the winch drum on the shaft, ensure that the thrust washer (item 53) is located in the retaining groove in the drum.
e. When reassembling the automatic safety brake, ensure that 9.5 mm ± 3.175 mm (0.374 ± 0.125 in.) of the threaded section of the adjusting bolt (item 26) protrudes from the outside edge of the nylock nut (item 30); this ensures that the correct brake band tension is maintained.
f. Remove the fill plug (item 12) and the level plug (item 18).
g. Refill the winch gearbox through the fill plug, using OEP-220 gear oil (2.5 litres), until oil seeps out from the level plug hole.
h. Install the level plug and fill plug.

## Torque Limiter

164 Removal

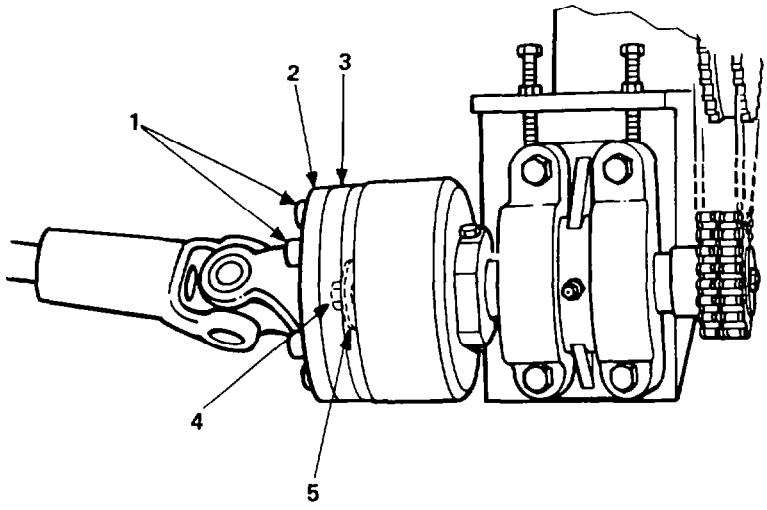


Fig. 386 — Torque Limiter

a. Remove the *six* socket-head bolts (fig. 386, item 1) from the drive shaft yoke adapter. Tie the drive (propeller) shaft out of the way.

NOTE: The adapter and flange plates (items 2 and 3) may fall out as the last bolt is removed.

b. Remove the adaptor plate (item 2), making note of the position of the grease gallery in relation to the body.

c. Remove the tie-wire from the retaining bolt (item 4), remove the retaining bolt and keeper plate (item 5).

d. Slide the torque limiter forward and remove it from the shaft.

165 Disassembly (see Fig. 387)

a. Secure the torque limiter onto the jig (refer to special tool drawing No. 90062) using the socket-head bolts, then secure the jig in a vice.

b. Remove the lock bolt (item 15) and remove the adjusting nut (item 13) while counting the number of turns. Use tool 90061 (refer to special tool drawing No. 90061) and torque wrench to prevent the hub turning while removing the nut.

NOTE: Take care that none of the fifteen steel balls (item 6) fall out as tension is released.

c. Remove the safety cover (item 12).

d. Remove the internal-tab washer (item 11) and the belleville spring elements (item 10).

e. Remove the six steel balls (item 8).

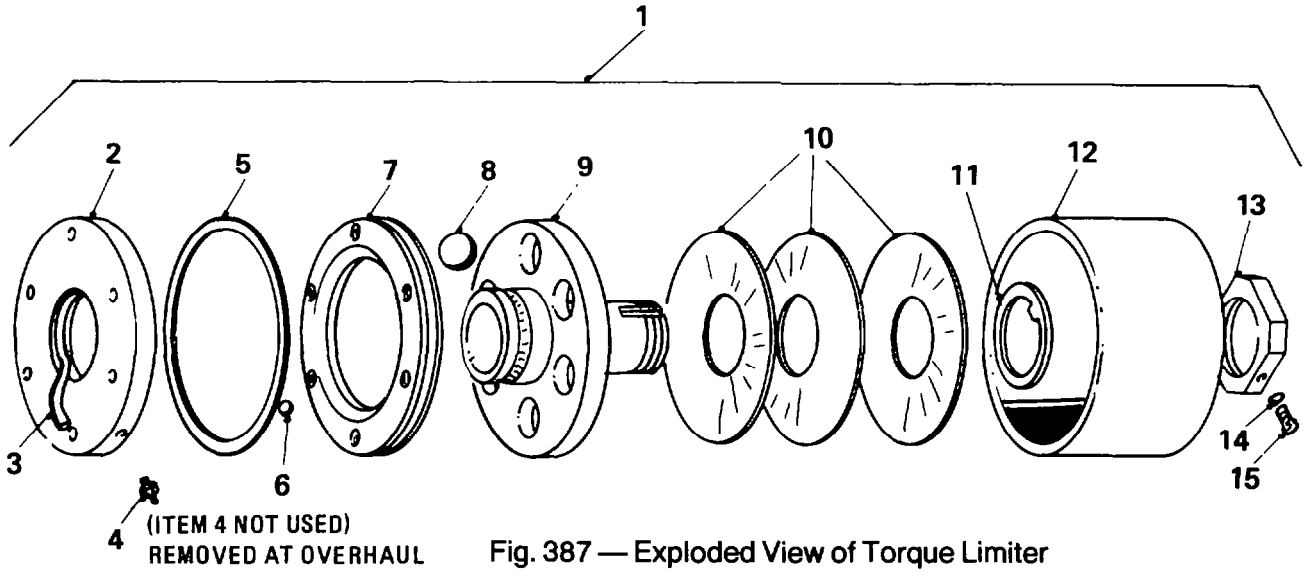


Fig. 387 — Exploded View of Torque Limiter

166 Inspection

a. Check all parts for wear or damage. Replace parts as necessary.
b. Ensure that the felt strip (item 3) is still intact. Replace as necessary.

167 Reassembly

a. Apply grease (Caltex RPM SR1-2) liberally to all working surfaces and reassemble the torque limiter in the reverse order of disassembly.

168 Re-setting the Triggering Torque

a. Refit the torque limiter to the jig (special tool drawing No. 90062) (if removed) and secure the jig in the vice.
b. Install the adjusting nut (item 13) and adjust the belleville spring pre-load to approximately the same as it was prior to the disassembly. Use special tool drawing No. 90061 and torque wrench to prevent the hub from turning while adjusting the pre-load.
c. Using the torque wrench and tool 90061 check that the torque required to turn the hub is 265 Nm (196 lb.ft). Tighten or slacken the adjusting nut (item 13) to obtain this torque.
d. Once the correct torque is obtained, install the adjusting nut lock bolt (item 15).
e. Install a grease fitting and apply 250 grams of grease (Caltex RPM SR1-2) to the unit.
f. Remove the grease fitting and plug the hole with a suitable sealent (e.g. Silastic), also seal the two external keyway passages in the hub.
g. After resetting the triggering torque, stamp the letter 'M' onto the adjusting nut (item 13).

169 Installation

a. Install the torque limiter in the reverse order of removal.
b. Ensure that the drive shaft yoke adapter retaining bolts are coated with Loctite 242 before installing.

## Torque Limiter Support Bearing Assembly

170 Removal

a Loosen the two locknuts (fig. 388, item 1), two set screws (item 2) and the four bolts (item 3).
b. Remove the master link (item 4) then remove the drive chain (item 5) from the unit; cut and remove the lock wire then remove the two retaining bolts (item 6) and keeper (clamp) plates (item 7).
c. Slide the torque limiter (item 8) and sprocket (item 9) off the shaft (item 10), then remove the two parallel keys.
d. Remove the four bolts (item 3), spring washers and two blocks (item 11), then remove the complete bearing assembly (item 12) from the housing.
e. Remove the two bolts securing the torque limiter bracket to the truck chassis then remove the unit from the truck.

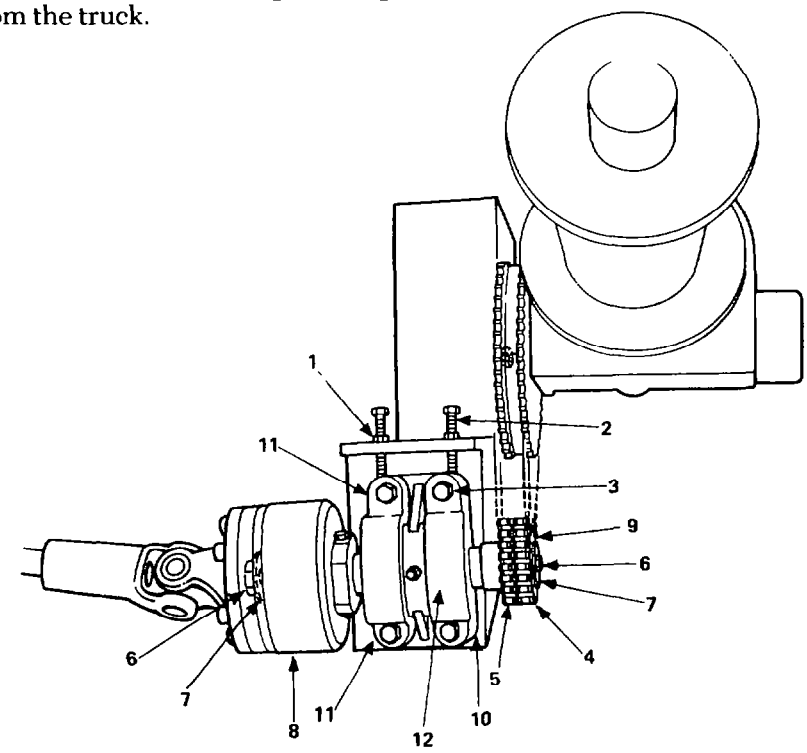


Fig. 388 — Removal of Support Bearing Assembly

171 Disassembly

a. Remove the two internal circlips (fig. 389, item 1), then remove the two external circlips (item 2); slide the collar (item 3) from the shaft (item 4).

b. Press the shaft (item 4) out of the bearings (item 5) by supporting the housing (item 6) and applying a steady even pressure to the torque limiter end of the shaft i.e. the longer end of the shaft.

c. Remove the bearings (item 5) from the housing (item 6); clean and inspect all components; replace any component showing signs of wear or damage.

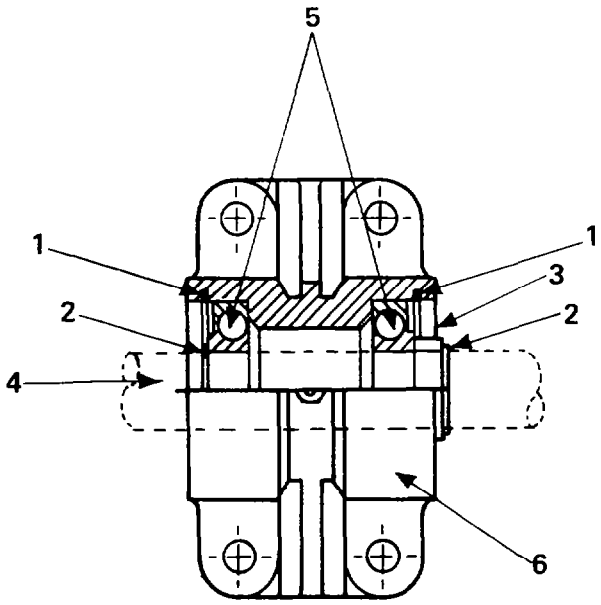


Fig. 389 — Support Bearing Assembly

172 Reassembly

a. Reassemble the torque limiter in the reverse sequence to disassembly, paying particular attention to the following points:

1. Use new circlips, locking wire and chain master link during reassembly.
2. Align the chain until the sprockets (fig. 388, items 9 and 13) are in the same vertical plane, before tightening the retaining bolts.
3. Adjust the chain tension until there is a deflection of approximately 12 mm (0.5 in.) in the centre of the chain span.
4. Lubricate the chain using a dry powder lubricant such as Vescatene or equivalent.
5. If the unit is to be stored attach a NO OIL label to it.

## POWER TAKE-OFF OVERHAUL

### Adapter

173 Removal

a. Thoroughly clean the transmission, PTO and adapter assembly.
b. Place a suitable receptacle under the transmission and drain the transmission oil.
c. Remove the PTO control cable and the winch drive propeller shaft.
d. Remove the six nuts and washers securing the PTO adapter to the transmission adapter plate and remove the PTO and adapter complete.
e. Remove the bolts securing the adapter plate to the transmission and remove the plate.
f. Place the PTO on a work bench and remove the six nuts and washers securing the PTO to the adapter. Remove the adapter.

174 Disassembly

> *CAUTION:*
> *The adapter housing is quite brittle and is easily damaged unless handled carefully.*

a. Using a suitable drift and hammer, drive the roll pin completely into the shaft (see fig. 390).

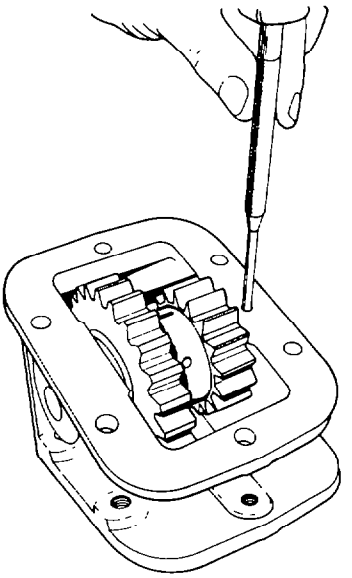

Fig. 390 — Driving Roll Pin into Shaft

b. Support the adapter housing and remove the shaft. Use a suitable drift and hammer to drive the shaft out from the opposite end to the roll pin to avoid possible damage to the needle roller bearings (see fig. 391).

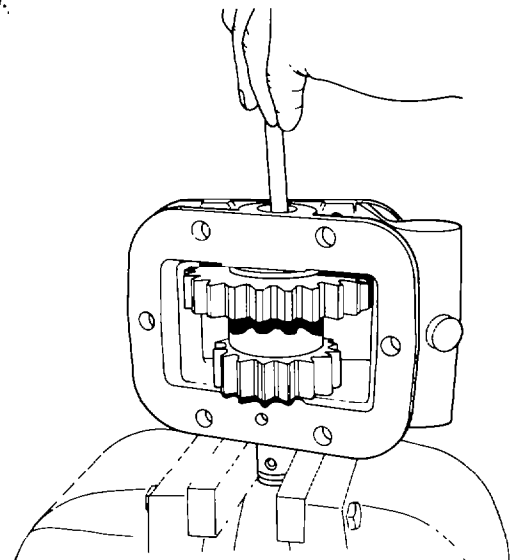

Fig. 391 — Removing Shaft

c. Match mark the gear, housing and washers to ensure correct location at reassembly, then remove the gear and washers from the housing (see fig. 392).

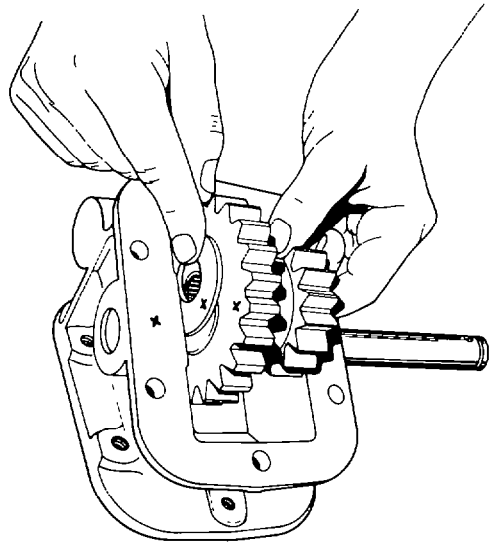

Fig. 392 — Match Marking Gear, Washers and Housing

d. Position the gear on an arbor press then press out and discard the needle roller bearings (see fig. 393).
e. Remove the roll pin from the shaft using the drift and hammer. Remove the O-rings from the ends of the shaft.

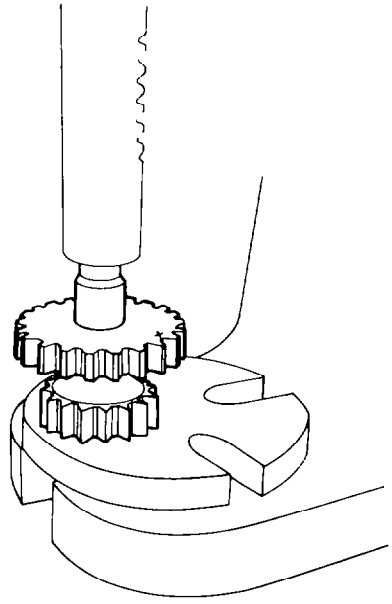

Fig. 393 — Removing Bearings

175 Inspection

a. Remove all gasket residue and clean all components.
b. Inspect the gear for worn or damaged teeth and check that the lubrication holes are clear. Replace the gear if necessary.
c. Inspect the shaft for wear or damage, replace if necessary.
d. Check the condition of the housing. Replace the housing if it is cracked or broken or if the shaft holes are elongated.
e. Check the two thrust washers for wear, scoring, discolouration or contamination by foreign particles. Also check the thickness of the two washers. The bronze thrust washer should be 3.124 – 3.175 mm (0.123 – 0.125 in.) while the small bi-metal thrust washer should be 1.498 – 1.524 mm (0.059 – 0.060 in.) thick. Replace as necessary.

176 Reassembly

a. Position the gear in the press and install new needle roller bearings.
b. Lubricate the bearings with gear oil (OEP-220), then position the gear in the housing, aligning the match marks. Install the thrust washers with the large washer to the large gear and the small washer to the small gear, with the grooves in both thrust washers facing towards the gears.
c. Using a feeler gauge check that the gear sideplay is less than 0.375 mm (0.015 in.).
d. Install new O-rings onto the shaft, smear the O-rings with gear oil and install the shaft from the roll pin side of the housing taking care not to damage the O-rings.
e. Align the roll pin holes in the shaft and housing and install the roll pin.

177 Installation

a. Insert a wooden wedge between the PTO drive gear and the transmission housing (see fig. 394).

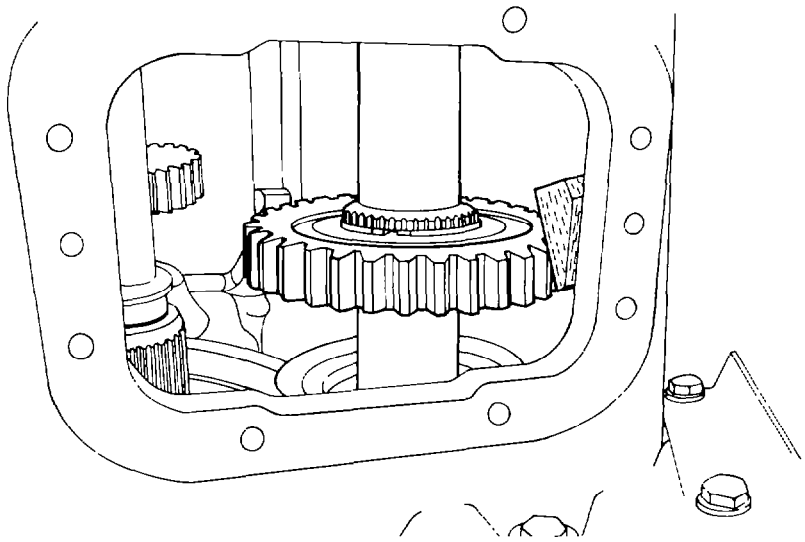

Fig. 394 — Wedge Location

b. Fit a new gasket to the adapter plate then install the adapter plate and secure with four bolts and spring washers.
c. Fit a new gasket to the PTO adapter then install the PTO adapter and secure with the top and bottom bolts only.
d. Install a dial indicator, then rock the gear back and forth by hand and check for a backlash reading (see fig. 395).

NOTE: This backlash check is to ascertain whether or not extra gaskets are required between the adapter plate and the PTO adapter housing.

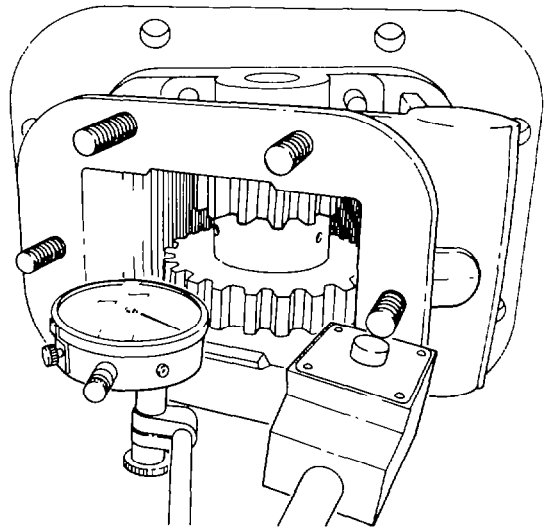

Fig. 395 — Checking PTO Adapter to Transmission Backlash

e. The correct backlash for the adapter gear is 0.250 – 0.375 mm (0.010 – 0.015 in.). Install a gasket or gaskets between the adapter plate and the PTO adapter to obtain this figure.
f. Remove the PTO adapter, leave the gaskets on the adapter plate and remove the adapter plate.
g. Remove the wooden wedge previously inserted between the PTO drive gear and transmission housing.
h. Reinstall the adapter plate and gasket. Apply Loctite 271 to the retaining bolts and torque them to 34 – 38 Nm (25 – 28 lb.ft).
i. Position the PTO adapter and several gaskets onto the PTO unit. Secure the adapter in position by installing the top and bottom nuts only.
j. Install the dial indicator on to the adapter, jam the PTO driven gear with a screwdriver as shown in fig. 396, then check the adapter gear for backlash.

NOTE: Care must be taken to ensure that the screwdriver does not damage the PTO or adapter.

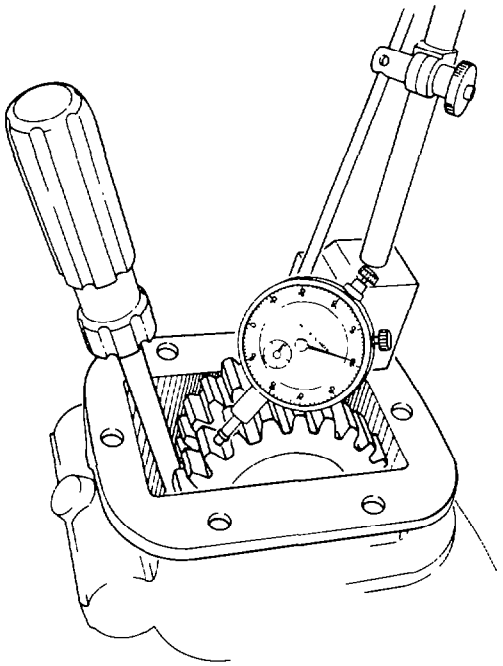

Fig. 396 — Checking Adapter to PTO Backlash



k. Add or remove gaskets to obtain a reading of 0.250 – 0.375 mm (0.010 – 0.015 in.).
l. When the correct reading is obtained, remove the nuts securing the adapter to the PTO and apply Loctite 271 to the studs, install the six nuts and spring washers and torque to 34 – 38 Nm (25 – 28 lb.ft).
m. Apply Loctite 271 to the studs on the adapter plate, install the PTO and adapter assembly then install and torque the retaining nuts to 34 – 38 Nm (25 – 28 lb.ft).
n. Reinstall the winch drive propeller shaft and the PTO control cable.
o. Reinstall the transmission drain plug and refill the transmission with OEP-220 (10.4 litres).
p. Check the operation of the PTO.

## Power Take-Off (PTO)

178 Removal

a. Remove the PTO as detailed in paras. 173 a, b, c and d.
b. Place the PTO and adapter assembly on a work bench and remove the adapter.

> *CAUTION:*
> *Take care when working on the adapter or the PTO housings as both are quite brittle and can easily be damaged.*

179 Disassembly

a. Match mark the PTO drive gear and housing (see fig. 397).

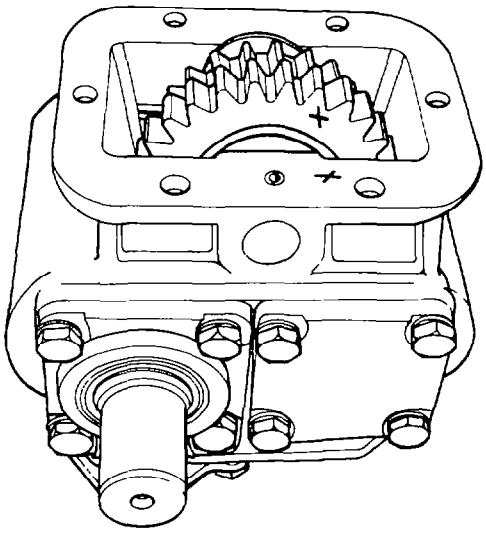

Fig. 397 — Match Marking Drive Gear and Housing

b. Using a suitable drift and hammer, drive the shaft locating roll pin completely into the shaft, then remove the shaft from the housing by driving the shaft from the opposite end to the roll pin to avoid possible damage to the needle roller bearings (see fig. 398).

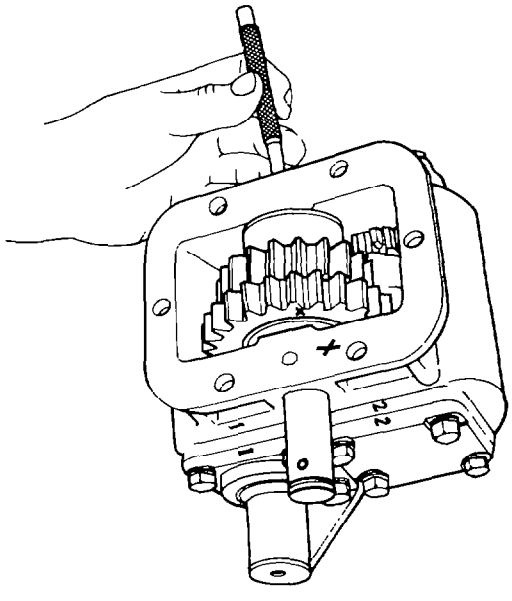

Fig. 398 — Removing Drive Gear Shaft

c. Remove the drive gear and thrust washers. Check the condition of the needle roller bearings, if necessary, remove the bearings by pressing out. Refer to para. 174 d.

d. Match mark or number the bearing cover plates, the selector lever, the selector cover and the cable bracket to the housing for correct positioning at reassembly (see fig. 399).

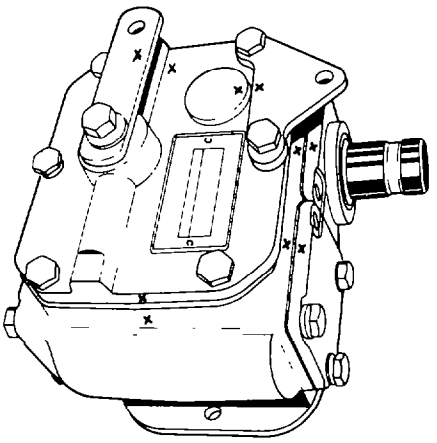

Fig. 399 — Match Marking Housing and Covers

e. Position the housing on the adapter mounting face and remove the cable bracket and the selector cover.
f. Remove the key from the output shaft.
g. Remove the bolts securing the four bearing cover plates to the housing and remove the cover plates.
h. Remove the bearing cups from the housing by driving the output shaft and countershaft against the bearing cups using a soft-faced hammer.
i. Remove the bearing cone from the output shaft from the end opposite to the keyed output, using a suitable puller. Ensure that the puller is pulling against the inner race and not the cage.
j. Remove the spacer and circlip noting the position of the spacer for correct location at reassembly.
k. Mark the sliding gear in relationship to the output shaft, withdraw the shaft from the gear then remove the gear from the housing.
l. Remove the countershaft assembly from the PTO housing through the top of the housing. Take note of the recess in the shaft corresponding to the position of the larger input gear.
m. Mark the position of the countershaft gear on the shaft, i.e. the small gear of the cluster to the shoulder of the shaft.
n. Position the countershaft in a press and press the gears, bearing and spacer from the shaft (see fig. 400).
o. Remove the seal from the output shaft bearing cover plate.
p. Remove the selector quadrant from the selector cover by removing the external lever, pressure plug, spacer, spring and poppet.
q. Remove and discard the selector quadrant O-ring.

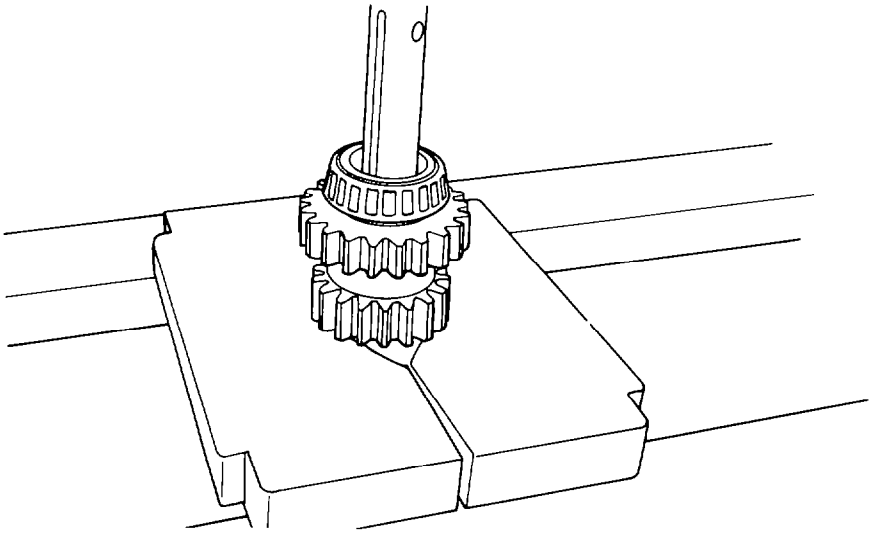

Fig. 400 — Removing Gear and Bearing from Countershaft

180 Inspection

a. Check the condition of the bearings. Replace as necessary.
b. Inspect the gears for cracked, chipped or worn teeth. Replace gears as necessary.
c. Inspect splines and keyways on the gears and shafts. Replace worn gears or shafts.
d. Inspect the housing for signs of wear, damage or cracks. Replace as necessary.

181 Reassembly

a. Place the countershaft in the press, position the gear on the shaft, align the keyway in the gear with the key on the shaft, then slide the gear onto the shaft.
b. Install the spacer then, using a suitable adapter against the inner bearing race, press the bearing onto the shaft.
c. Turn the shaft over and install the bearing on the opposite end of the shaft.
d. Assemble the countershaft into the housing, apply lubricant (OEP-220) to the bearings then install the bearing cups.
e. Install the bearing cover plate with a new gasket onto the output side of the housing. Torque the retaining bolts to 34 – 38 Nm (25 – 28 lb.ft).
f. Install the bearing cover plate together with shims and a new gasket on the other side of the housing and install the retaining bolts.
g. Wind a cord several times around the countershaft gear and attach a spring scale to one end.
h. Check the bearing preload of the countershaft while torquing the bearing cover plate retaining bolts. The preload should be 18 N (4 lb.) when pulling on the spring scale with an even, steady pull (see fig. 401). If necessary, add or remove shims to obtain the correct preload. Torque the retaining bolts to 34 – 38 Nm (25 – 28 lb.ft).

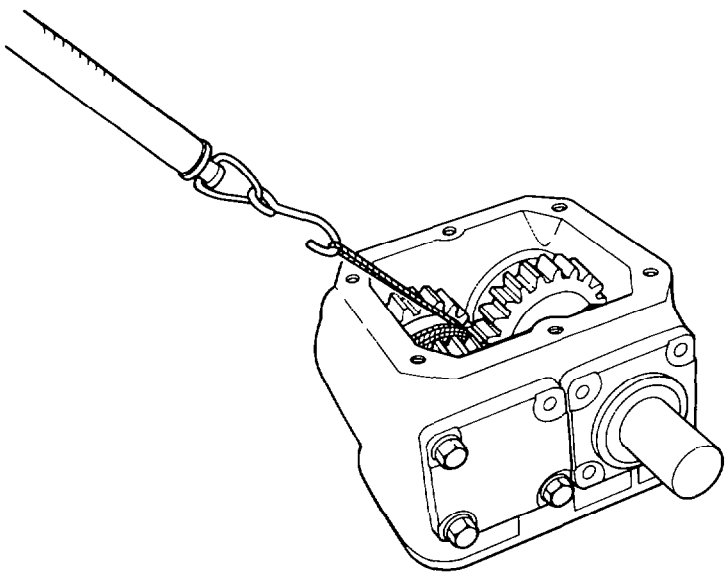

Fig. 401 — Checking Countershaft Bearing Preload

i. Install a new circlip onto the output shaft on the end nearest the key. Install the spacer, originally taken from this position. Place the shaft in the press and install the bearing.
j. Position the sliding gear in the housing, aligning it with the large diameter gear of the cluster, then feed the output shaft, short end first, through the housing from the side nearest the output side, and through the sliding gear.
k. Install the circlip and spacer onto the shaft then place the housing and shaft on the press.
l. Position the bearing cone on the shaft then press into place using a suitable adapter to enable the bearing to be properly seated against the spacer. Remove the housing from the press.
m. Lubricate the housing cones then install the bearing cups into the housing.
n. Install a new seal in the output shaft bearing cover plate, lubricate the sealing lip with oil, position a new gasket on the cover plate and install the cover plate. Torque the retaining bolts to 34 – 38 Nm (25 – 28 lb.ft).

NOTE: An open-end spanner adapter will be needed on the torque wrench to enable the bolts on the output shaft bearing cover plate to be correctly torqued.

o. Install the bearing cover plate complete with shims and gasket on the side opposite the output. Wind a cord several times around the output shaft gear and attach a spring scale to one end.
p. Check the output shaft bearing preload while torquing the bearing cover plate retaining bolts. The preload should be 18 N (4 lb.) when pulling on the spring scale with an even, steady pull. Add or remove shims to obtain this figure. Torque the retaining bolts to 34 – 38 Nm (25 – 28 lb.ft).
q. Reassemble the selector quadrant to the selector cover ensuring that the poppet is correctly seated in one of the detent holes in the quadrant pin. Lubricate a new O-ring with OEP-220 then install the O-ring, O-ring retaining washer and external lever to the selector cover.
r. Position a new gasket on the selector cover and install the cover cable bracket and the retaining bolts. Ensure that the selector fork is positioned over the gear (see fig. 402). Torque the retaining bolts to 34 – 38 Nm (24 – 28 lb.ft).

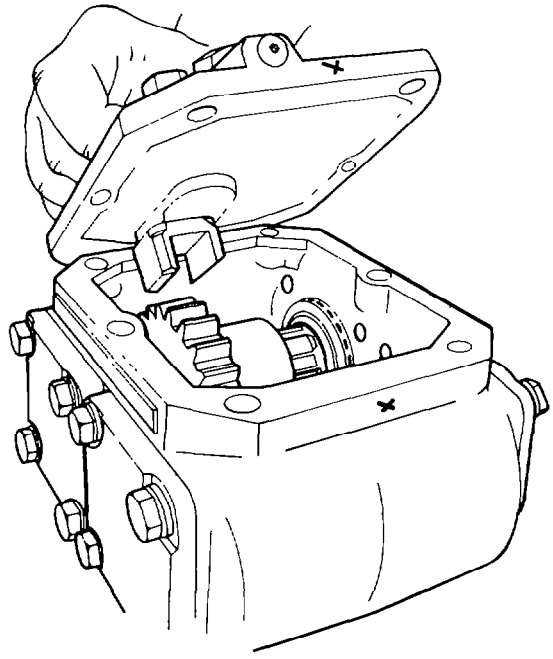

Fig. 402 — Installing Selector Cover

s. If the needle roller bearings were removed from the drive gear, install new bearings by pressing into place with a hydraulic press.
t. Remove the roll pin from the drive gear shaft and replace the O-rings on the ends of the shaft.
u. Lubricate the bearings then place a thrust washer on the end of the gear with the grooves towards the gear. Position the gear in the housing aligning the matchmarks.
v. Insert the shaft in the output side of the housing. Before fully installing the shaft, align the roll pin holes and install the thrust washer at the other end of the gear with the grooves towards the gear. Align the thrust washer then drive the shaft into the housing.
w. Install the roll pin into the housing to secure the shaft.
x. Fit the adapter and gaskets to the PTO and secure with nuts on the top and bottom studs only.

y. Install a dial indicator and check that the adapter gear backlash is 0.025 – 0.375 mm (0.010 – 0.015 in.) while holding the PTO driven gear with a screwdriver (see fig. 403). Add or remove gaskets as necessary to obtain the correct reading. Remove the dial indicator.

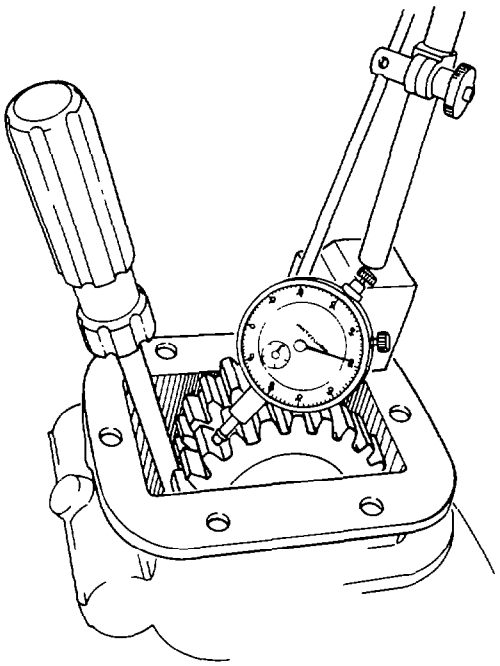

Fig. 403 — Checking Adapter to PTO Backlash

z. Remove the two nuts and apply Loctite 271 to the six studs. Install the nuts and spring washers and torque to 34 – 38 Nm (25 – 28 lb.ft).

182 Installation

a. Fit the PTO and adapter assembly, with the original gaskets, to the adapter plate on the transmission.
b. Apply Loctite 271 to the studs on the adapter plate then install the nuts and spring washers and torque them to 34 – 38 Nm (25 – 28 lb.ft).
c. Fit the key to the output shaft and install the winch drive propeller shaft.
d. Reconnect the control cable.
e. Refill the transmission with OEP-220 (10.4 litres).
f. Check the operation of the PTO.

**END**

Class 26.0 Code 4 (MEA115/82A)