NSN — 7610-66-140-6215

AUSTRALIAN ARMY

TECHNICAL MANUAL

USER HANDBOOK

TRUCK, COMSEC REPAIR, LIGHT, MC2

NSN — 2320-66-128-7681
(SIGC 2320/0150)
1995

(W. J. Crews)
Major General
Assistant Chief of the
General Staff
Materiel — Army

Issued by Command
of the Chief of the
General Staff

AMENDMENT RECORD

Amendment No.	Actioned by: Signature and Date

SYNOPSIS

The Truck, Comsec Repair, Light, MC2 is a six-wheeled Army vehicle designed specifically for military use. The vehicle is based on the Land Rover 110 Series commercial vehicle, but with an extended chassis and an additional axle. The Comsec vehicle is a constant four-wheel drive, with selective six-wheel drive for negotiating difficult terrain. Vehicle slinging, tie-down and recovery points are incorporated in the chassis.

The Comsec module is a self-contained structure which can be fitted to the cab/chassis of a Truck, Cargo, Light, MC2 in place of the standard cargo tray body.

The module provides an environmentally controlled work area for two tradesmen, and includes benches (with a top finish of anti-static material and non-conductive edging), storage space, air-conditioning and suitable lighting.

The vehicle has a range of approximately 600 km on first class roads, and 480 km on second class roads. Cross country ranges vary depending on terrain. The rated gross vehicle mass (GVM) and gross combined mass (GCM) for both highway and cross country conditions is 5.6 tonne and 7.1 tonne respectively.

LIST OF CONTENTS

Preliminary Pages	Page No.
Amendment Record	ii
Synopsis	iii
List of contents	iv
List of illustrations	v
List of tables	vii
Associated publications	viii
Frontispiece	ix
Maintenance Supply Item (MSI) identification	x

Chapter	Section	Heading	Page No.
1		General description	1
	1	Data summary	2
	2	Shipping and transportation data	12
	3	Equipment description	15
2		Operating instructions	37
	1	Warranty and repair	38
	2	Vehicle operation	42
3		Operator servicing	51
	1	Servicing	52
	2	Lubrication	67
4		Comsec module	77
	1	Equipment description	78
	2	Equipment operating instructions	91
Index			93

LIST OF ILLUSTRATIONS

Fig. No.	Title	Page No.
1-1	Truck, Comsec, Light, MC2 — front view	ix
1-2	Truck, Comsec, Light, MC2 — rear view	ix
1-3	Slinging and tie-down points	14
1-4	Air temperature and distribution controls	18
1-5	Combination switch operation	19
1-6	Warning lights	21
1-7	Windscreen washer and wiper control	22
1-8	Hazard warning and cab dome light switches	23
1-9	Bonnet safety catch	24
1-10	Main lighting switch	24
1-11	Gear change pattern	25
1-12	Transfer case shift pattern	26
1-13	Fuses	26
1-14	Seat adjustment	27
1-15	Rear window	28
1-16	Roof hatch	28
1-17	Rear side window	29
1-18	Spare wheel lowering	30
1-19	Vehicle nomenclature plate	31
1-20	Servicing data and tyre pressure plate	31
1-21	Shipping data plate	32
1-22	Towing and dyno test data plate	32
1-23	Jacking procedure plate	33
1-24	Instruments, electrical accessories and controls	35
2-1	Starter switch positions	43
2-2	Flywheel housing drain	45
2-3	Jack position — front wheels	48
2-4	Jack position — rear wheels	48
3-1	Thermostat housing	55
3-2	Bleeding the fuel system	56
3-3	Lubrication and oil drain/refill points	68
3-4	Engine right hand side	68
3-5	Oil filter removal	69
3-6	Transmission drain and fill plugs	70
3-7	Transfer case drain and fill plugs	70
3-8	Intermediate axle drain and fill plugs	71
3-9	Rear axle drain and fill plugs	71
3-10	Swivel pin housing drain and fill plugs	72
3-11	Fuel filter	73
3-12	Fuel sedimenters	73

LIST OF ILLUSTRATIONS (Cont'd)

Fig. No.	Title	Page No.
3-13	Air cleaner removal	74
3-14	Air cleaner elements	74
3-15	Brake reservoir	75
3-16	Clutch reservoir	76
3-17	Jockey pulley lubrication	76
4-1	Ceiling light switches	78
4-2	Module 24 volt lighting	79
4-3	High level rear lights	79
4-4	Fan assisted heater	80
4-5	Air conditioning unit	80
4-6	Air conditioning compressor	81
4-7	Circuit breaker and power selection panel	81
4-8	Rear step	83
4-9	Power inlet sockets	83
4-10	Battery Charger	84
4-11	Fire extinguisher location and alternative position of first aid kit	85
4-12	Module interior view	89
4-13	Side bench	91
4-14	Bin pack mounting frame	92

LIST OF TABLES

Table No.	Title	Page No.
1-1	Location of identification numbers on MSIs	x
2-1	Pro-rata warranty	38
2-2	RA State offices	41
3-1	Daily tasks	57
3-2	Fortnightly tasks	58
3-3	Servicing Instructions	60
3-4	List of lubricants	67

ASSOCIATED PUBLICATIONS

1. Standing Orders for Vehicle Operators (SOVO) (Vol 2 — B Vehicles)
2. MEMA Vol 3
3. Australian Army Books:

   GM 120 Record Book for Service Equipment — Army
4. Complete Equipment Schedules (CES):
   a. SCES 12166 — Truck, Comsec RepairLight, MC2
5. Block Scale — Special Tools for RAEME — B Vehicles
   a. 2406/31 —Truck Utility and Truck Light MC2 (Land Rover Model 110)
   b. 2401/21 — Maintenance Shelters Series 110
6. EMEI VEH A 029 — Servicing of B Vehicles
7. EMEI VEH A 119-22 — Repair of Vehicles Under Warranty Agreement — Policy Instruction
8. EMEI VEH G 250 — Data Summary (Truck, Electronic Repair, Light, MC2 and Truck, Comsec Repair, Light. MC2)
9. EMEI VEH G 202 — Technical Description (Truck, Cargo, Light, MC2)
10. EMEI VEH G 252 — Technical Description (Truck, Electronic Repair, Light, MC2 and Truck, Comsec Repair, Light. MC2)
11. EMEI VEH G 203 — Unit Repair (Truck, Cargo, Light, MC2)
12. EMEI VEH G 253 — Unit Repair (Truck, Electronic Repair, Light, MC2 and Truck, Comsec Repair, Light. MC2)
13. EMEI VEH G 204 — Field Repair (Truck, Cargo, Light, MC2)
14. EMEI VEH G 204-1 — Base Repair (Truck, Cargo, Light, MC2)
15. EMEI VEH G 254-1 — Field and Base Repair (Truck, Electronic Repair, Light, MC2 and Truck, Comsec Repair, Light. MC2)
16. EMEI WKSP E 652 — Use of Polyurethane Paints and Solvents
17. EMEI VEH G 209 — Servicing Instruction
18. Repair Parts Scale 02222

FRONTISPIECE

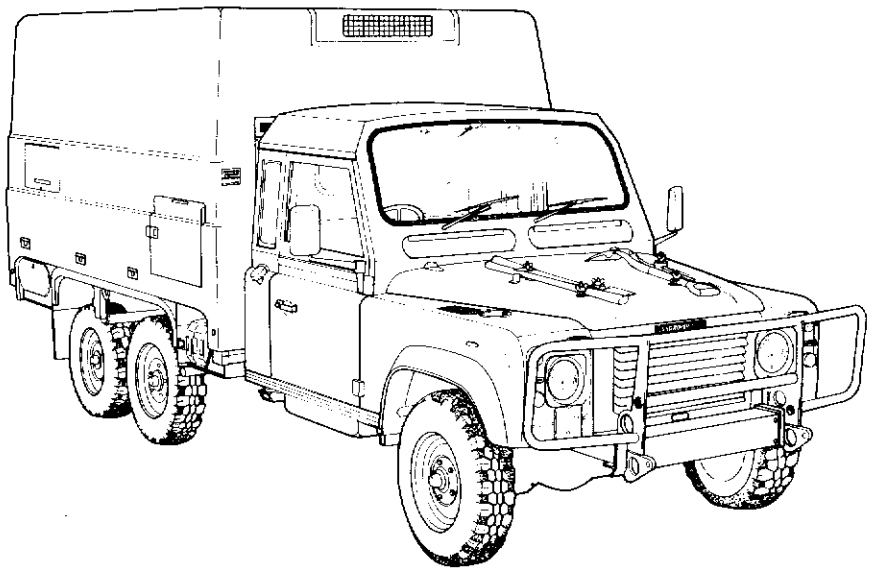

Figure 1-1 Truck, Comsec Repair, Light, MC2 — front view

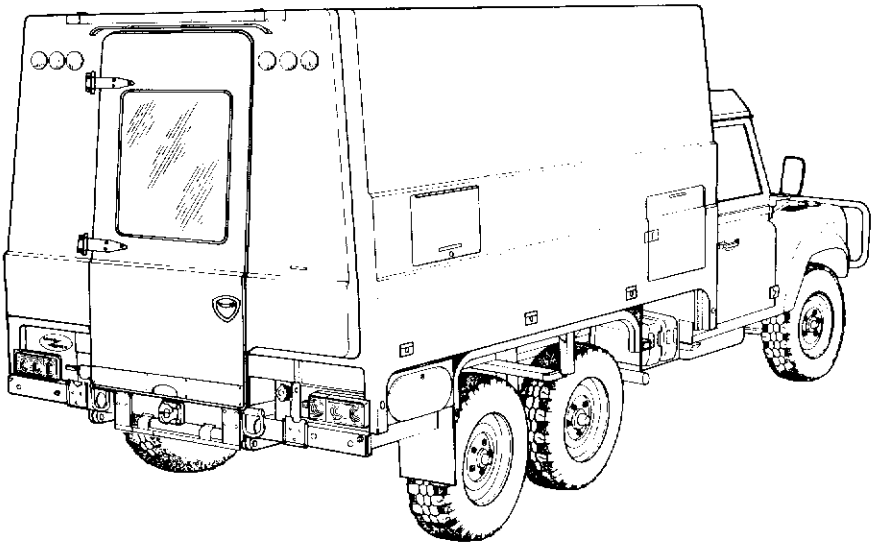

Figure 1-2 Truck, Comsec Repair, Light, MC2 — rear view

MAINTENANCE SUPPLY ITEM (MSI) IDENTIFICATION

Table 1-1 Location of identification numbers on MSIs

Chassis No. — Right hand side of the chassis, forward of the spring mounting turret

Chassis nameplate — Left hand seat box, in the cab

Engine No. — Left hand side of the engine block

Injection pump identification — Side of the pump

Transmission and transfer case — Rear of the transfer case

Repair module — Right hand rear

Air conditioning compressor — Front outer mounting point

CHAPTER 1

GENERAL DESCRIPTION

SECTION 1 — DATA SUMMARY

SECTION 2 — SHIPPING AND TRANSPORTATION DATA

SECTION 3 — EQUIPMENT DESCRIPTION

SECTION 1
DATA SUMMARY

NOTE

Throughout this manual all references to left hand (LH) and right hand (RH) are as viewed from the rear of the vehicle looking forward.

Truck Model No.	Land Rover 110 6 x 6
1. Engine	
Manufacturer	Isuzu
Type	4BD1 TRB-G series, turbocharged, four cylinder in line, overhead valve four cycle direct injection diesel engine
Displacement	3.856 litres
Bore	102 mm
Stroke	118 mm
Compression ratio	17:1
Firing order	1 - 3 - 4 - 2
Power	90 kW @ 3000 rpm
Maximum torque	314 Nm @ 2200 rpm
No load maximum	3600 ± 100 rpm
Engine idle speed	650 ± 20 rpm
Oil capacity	8.5 litre including filters
Oil filters	External, full flow, spin on
Oil pressure	390-581 kPa @ 2400 rpm
Oil cooler	Water cooled, plate and tube type

Engine dry weight	
— With 24 volt alternator	350 kg
— Without 24 volt system	322.5 kg
Turbocharger	Water cooled, Garret, model ATD-T25

2. Cooling system

Type	Pressurised spill return system with thermostat control, pump and fan assisted
Capacity	12.8 litres
Thermostat	Downward opening wax element type incorporating a by-pass shut off valve. Opening temperature 82°C
Coolant	Water with 5% Alfloc 2001 inhibitor

3. Engine accessory drive

12 volt system

Type	Single Vee-belt
Tension	Approximately 10-15 mm deflection, midway along the longest span using moderate thumb force

24 volt system

Type	Single Vee-belt
Tension	Approximately 10-15 mm deflection midway along the longest span using moderate thumb force

4. Fuel system

Fuel pump	Diesel Kiki (Bosch) in-line Type A model 550k with automatic timer
Governor	RLD-K mechanical
Transfer pump	KE mechanical with gauze intake filter
Injectors	Four-hole spray type

Main filter	Inlet manifold mounted, spin-on type
Sedimenter	Two chassis mounted CAV SS type sedimenters are connected in parallel
Fuel tanks	Two, 62 litre tanks connected in parallel and independent of each other, tank selection by dash mounted switch

5. Engine starter

Manufacturer	Mitsubishi
Type	Waterproof, gear reduction (electric powered)

6. Clutch

Manufacturer	Repco/Isuzu
Type	Hydraulically operated single dry plate and diaphragm spring
Free travel (pedal)	6 mm minimum

7. Transmission

Manufacturer	Land Rover
Type	Model LT95A, four forward, one reverse, synchromesh on all forward gears. Incorporates an integral transfer case
Ratios	First gear 4.069:1 Second gear 2.448:1 Third gear 1.505:1 Fourth gear 1.000:1 Reverse gear 3.664:1

8. Transfer case

Manufacturer	Land Rover
Type	High and low gear ratios operating on the main transmission output. The front and

	intermediate axles are permanently engaged via a differential in the transfer case. The rear axle is automatically engaged when the transfer case differential is locked — for traversing difficult terrain
Ratios	High range 0.996:1 Low-range 3.321:1

9. Front axle

Manufacturer	Land Rover
Type	Fully floating spiral bevel steerable drive axle with enclosed outboard constant velocity joints and four pinion differential
Ratio	4.7:1
Track	1698 mm
Design load rating	1900 kg

10. Rear axles

Manufacturer	GKN
Type	Salisbury fully floating hypoid bevel drive, four pinion differential
Ratio	4.7:1
Track	1698 mm
Design load rating	2050 kg

11. Propeller shafts

Type — Front	An open shaft, incorporating a Hookes type universal joint at either end. Variations in the length of the shaft is achieved by employing a splined sliding joint between the two universal joints
—Intermediate	An open shaft, incorporating a Hookes type universal joint at either end. Variations in the length of the shaft is achieved by employing a splined sliding

	joint between the two universal joints
—Rear	A two piece open shaft incorporating a Hookes type universal joint at either end. The centre section of the shaft is mounted via a bearing to the chassis frame and the articulation of the rear section of the shaft is achieved through the use of a double Hookes joint, and a splined sliding joint

12. Front suspension

Type	Radius arms with Panhard rod located live axle with vertically mounted double acting telescopic shock absorbers mounted inside single rate coil springs
Design load rating	1900 kg

13. Rear suspension

Type	Consists of two live axles located by four semi-elliptic springs. These springs are so mounted that the ends, between the axles overlap each other and are articulated by a load sharing rocker beam connected to the chassis. Axle bump and rebound travel is controlled by chassis mounted pads and cables. Suspension dampening is by four hydraulic shock absorbers
Design load rating	4100 kg

14. Steering

Manufacturer	Adwest
Type	Power assisted variable ratio worm and roller type utilizing a gear driven pump, mounted on the engine and a remote hydraulic reservoir
Turning circle	
Between kerbs	16.8 metres (nominal)
Between walls	17.2 metres (nominal)

15. Brakes

Type	Hydraulic split system with front and rear disc brakes, foot pedal actuated
Parking brake	Cable operated, transmission mounted drum brake
Warning devices	Dash mounted globes indicating front brake pad lining depth (actuated at 3 mm thickness) a failed hydraulic circuit, and parking brake applied

16. Chassis

Type	Hot dipped galvanized welded box section steel with welded box section crossmembers
Wheelbase	
Front to intermediate axle	3040 mm
Front to rear axle	3940 mm

17. Wheels and tyres

Rim type and size	Ventilated disc, 6F x 16
Tyre size	7.50-R-16LT 10 ply Olympic Steeltrek with 105 pattern
Tyre pressure (cold)	Highway: front 350 kPa (50 psi) intermediate 350 kPa (50 psi) rear 350 kPa (50 psi) Cross country: front 275 kPa (40 psi) intermediate 275 kPa (40 psi) rear 275 kPa (40 psi)

	Sand: front 225 kPa (33 psi) intermediate 225 kPa (33 psi) rear 225 kPa (33 psi)

18. Electrical system

Type	The vehicle is fitted with 12 volt, 24 volt, 110 volt, 240 volt and 415 volt electrical systems
12 volt system	12 volt negative earth
Battery	12 volt cold cranking performance of approximately 410 amps, located in the engine compartment
Alternator	Hitachi, 12 volt — 70 amp
24 volt system	24 volt negative earth
Batteries	Two 12 volt, 93 ah deep cycle batteries located in a box on the left hand side of the chassis
Alternator	Bosch 24 volt, 55 amp
240 volt/415 volt system	240 volt single phase/415 volt three phase
Mains input or field generator	Four switched 240 volt, AC, single phase, 10 amp Two switched 240 volt, AC, single phase, 15 amp
Battery charger	EDI Echidna 240 volt input, 0-12-24 volt output, located in left hand side front locker.
Transformer	Star Delta 240 volt AC input, 110 volt AC output, located in left hand side front locker.
Air conditioner motor	240 volt, single phase, 50 Hz, 2.2 kW @ 1500 rpm

19. Lighting, external 12 volt	**Location, quantity and wattage**
Headlights, high/low	Front of vehicle, 2 off, 60/55 watt Halogen
Park lights	Front of vehicle, 2 off, 5 watt
Stop and tail lights	Rear of vehicle, 2 off, 21/6 watt
High level stop and tail lights	Top of module at rear, 2 off, 10/5 watt
Turn indicator lights	Each corner of vehicle, 4 off, 21 watt
High level turn indicator lights	Top of rear door, 2 off, 10 watt
Side indicator lights	Front mudguards, 2 off, 4 watt
Reverse lights	Rear of vehicle, 2 off, 10 watt
High level reverse lights	Top of module at rear, 2 off, 18 watt

20. Lighting, internal 12 volt	**Location, quantity and wattage**
Dome light	Roof of cab, 1 off, 21 watt
Map light	Left hand side of instrument panel 1 off, 5 watt Halogen
Instrument lights— except speedo	Instrument panel, 3 off, 2 watt
Speedometer light	Instrument panel, 2 off, 3 watt
Warning lights — except low fuel	Instrument panel, 10 off, 1.2 watt
Low fuel light	Instrument panel, 1 off, 3 watt
Hazard switch warning light	Dashboard, 1 off, 0.6 watt

21. Lighting, internal 24 volt	**Location, quantity and wattage**
Emergency light	Roof of module, 4 off, 18 watt
Blackout	Ceiling, 2 off, 18 watt

22. Lighting, internal 240 volt	Location, quantity and wattage
Ceiling light	Roof of module, fluorescent tube, 4 off, 20 watt

23. Lighting, military	Location, quantity and wattage
Blackout lights	Front and rear of vehicle 4 off, replaceable module
Convoy light	Rear of vehicle,1 off, 2 watt
Reduced headlights	Front of vehicle, 2 off, 18 watt
Ancillary circuits	Couplings are provided at the rear of the vehicle to accept NATO and civilian trailer connectors

24. Performance	
Gradeability (cross-country laden) both directions	60 per cent gradient (31 degree slope)
Range of operation	600 km (first class roads) approx. 480 km (second class roads) approx.
Fuel consumption	22 litres per 100 km (highway laden) 27 litres per 100 km (second class laden) Fuel tank capacity 62 litres each
Maximum Towed Load	2000 kg.

25. Module internal dimensions	
Height	1800 mm
Width	2085 mm
Rear door width	740 mm
Rear door height	1600 mm
Length	3100 mm
Height of floor from road	
— Laden	725 mm
— Unladen	740 mm

26. Carrying capacity	3 personnel (including driver)
27. Fuses	**Rating (continuous)**
Located inside the cab, centre console, behind protective panel	
Headlights	4 off, 8 amp
Park lights	2.5 amp
Horn, dome light	10 amp
Hazard lights	10 amp
Reverse lights	10 amp
Windscreen wiper, washer	12 amp
Fan	10 amp
Spare	8 amp
Stop lights, instruments, turn indicators	10 amp
Blackout lights	8 amp
Reduced headlights	8 amp
Located under bonnet, near brake master cylinder/ booster	
Start/Stop Control Motor	10 amp

SECTION 2
SHIPPING AND TRANSPORTATION DATA

28. Dimensions

Overall length		6001 mm
Wheelbase	— Front axle to intermediate axle	3040 mm
	— Front axle to rear axle	3940 mm
Overall width	— Over mirrors	2440 mm
	— Reduced	2185 mm
Overall height	— Laden	2560 mm
	— Unladen	2590 mm
Track — Front		1698 mm
— Rear		1698 mm
Height of module from ground		
— Laden		710 mm
— Unladen		740 mm
Rear axle to rear of vehicle overhang		1183 mm
Towing pintle height	— Laden	700 mm
	— Unladen	730 mm
Mass (Unladen)		
— Front		1700 kg
— Intermediate		1475 kg
— Rear		1475 kg
— Total		4650 kg
Mass (Laden)		
— Front		1750 kg
— Intermediate		2100 kg
— Rear		2100 kg
— Total		5600 kg

29. Capacities

Equipment	DEF (AUST) 206	METRIC (litres)
Engine system (including filters)	OMD-115	8.5
Cooling system (including inhibitor)		12.8
Transmission	OMD-115	2.7
Transfer case (without PTO)	OMD-115	3.2
Front axle	OEP-220	1.7
Intermediate axle	OEP-220	2.3
Rear axle	OEP-220	2.6
Swivel pin housing (each)	OEP-220	0.35
Steering box (including reservoir)	OX 46	1.25
Fuel tank — Right hand	Diesel	62
— Left hand		62

NOTE

See EMEI VEH G 209 for list of approved lubricants.

30. Fording depth

Unprepared vehicle	500 mm
Limiting features (over 500 mm)	Cooling fan
Prepared vehicle	No facility available, as for unprepared vehicle

31. Bridge classification

Solo unladen	6

32. Ground clearance

Unladen	215 mm
Limiting feature	Rear differential housings

33. Transportability

Railway loading gauges (Local authorities must be consulted)

Rail authority	Gauge	Maximum rolling stock height
Commonwealth	1435 mm	2532 mm
Commonwealth	1067 mm	2532 mm
New South Wales	1435 mm	2182 mm
Queensland	1067 mm	1806 mm
South Australia	1600 mm	2075 mm
South Australia	1435 mm	2075 mm
South Australia	1067 mm	1761 mm
Tasmania	1067 mm	1992 mm
Victoria	1600 mm	2182 mm
Victoria	1435 mm	2182 mm
Western Australia	1435 mm	2532 mm
Western Australia	1067 mm	1973 mm

34. Slinging and tie-down points are illustrated in Fig. 1-3.

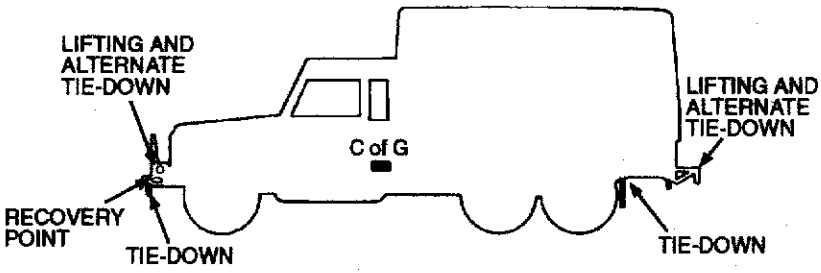

Figure 1-3 Slinging and tie-down points

35. Approach and departure angles

Approach angle	— Unladen	45 degrees
	— Laden	41 degrees
	— Limiting feature	Tie-down points
Departure angle	— Unladen	33 degrees
	— Laden	30 degrees
	— Limiting feature	Tie-down points
Ramp breakover angle	— Unladen	148 degrees
	— Laden	152 degrees
	— Limiting feature	Chassis rail

SECTION 3
EQUIPMENT DESCRIPTION

Introduction

36. The Truck, Comsec Repair, Light, MC2 has been designed specifically for military use. The vehicle provides an environmentally controlled work station for two tradesmen to carry out repairs on electronic componentry by utilizing the specialist equipment, tools, machinery and spare parts stowed within the module. The permanent four-wheel drive and selective six-wheel drive of the vehicle, enables access to be gained to most repair sites.

Operational and logistic concept

37. The Comsec Vehicle is designed to be utilized as either a part of a Main or Forward Repair Group where the vehicle may remain stationary for several days, or as an individual station, moving to the site of the repair, where tasks are of short duration.

Engine

38. The vehicle is fitted with an Isuzu 3.9 litre 4BD1TRB-G turbocharged, four cylinder diesel engine which produces 90 kW of power at 3000 rpm and 314 Nm of torque at 2200 rpm.

Transmission

39. The transmission is a heavy duty four-speed all-synchromesh transmission with an integral two-speed transfer case. Clutch and gear operations are manual and are without power assistance.

Transfer case

40. The transfer case, which is cast as part of the main transmission, provides high and low gear ratios, and four or six-wheel drive capabilities. It has an integral differential fitted to prevent wind up in the drive lines during normal on road conditions and which can be locked to provide a positive drive between the front and rear axles. During off road use, the locking of this differential, by operating a dash mounted switch, automatically engages the vehicle in six-wheel drive. It is imperative that this differential is locked, when crossing difficult terrain, or when conditions may lead to a loss of traction. A high speed range and a low speed range in the transfer case can be selected by operating a floor mounted lever. The selection of a speed range will not influence the four or six-wheel drive mode.

41. The parking brake operates a single drum brake which is mounted on the rear output shaft of the transfer case.

Steerable front drive axle

42. The vehicle is fitted with a steerable front drive axle, comprising a differential carrier assembly and axles, driving through constant velocity joints to steerable drive ends fitted with hydraulically operated disc brakes.

Front suspension

43. The front suspension utilizes radius arms, a Panhard rod, vertically mounted double acting telescopic shock absorbers and single rate coil springs. Bump stops are provided to limit the upward travel of the suspension, while the shock absorbers limit the downward travel of the axle.

Rear axles

44. The rear axles are Salisbury type, fully floating hypoid bevel drive axles with offset four pinion differentials.

Rear suspension

45. Dual rate semi-elliptic leaf springs linked via shackles to a rubber bushed load sharing rocker beam. Axle movement is controlled by four long travel telescopic shock absorbers and steel cable rebound straps.

Service brakes

46. The vehicle is fitted with a dual circuit hydraulic brake system consisting of two completely separate circuits. The primary circuit supplies the rear disc brakes and the secondary circuit supplies the front disc brakes.

47. Brake pad wear indicators are fitted to the front left hand caliper and will actuate a brake circuit warning light on the dashboard when brake pad lining thickness is reduced to approximately 3 mm. In addition, the warning light will illuminate if fluid loss occurs from either the primary or secondary brake circuit.

Parking brake

48. A single drum brake is mounted on the intermediate axle output shaft of the transfer case. This brake, which is mechanically operated by the parking brake lever in the cab, is completely independent of the foot operated hydraulic brake system.

Instruments, electrical accessories and controls (see Fig. 1-24)

49. Ventilator control (Fig. 1-24 items 1 and 13)

Two ventilators are provided in the windscreen frame, which may be opened independently by pushing the appropriate control lever downward.

50. Normal, blackout and reduced lighting switch (Fig. 1-24 item 2)

This three position switch, located on the fascia panel, controls the vehicle lighting as follows:

a. In the NORMAL or left position, all vehicle lighting operates via the usual controls.

b. In the BLACKOUT or mid position, all of the NORMAL lighting, with the exception of dash instruments, warning and map reading lights, are switched off. In this mode, the blackout stop lights will function when the brakes are applied, and the blackout marker lights at the front and rear of the vehicle are illuminated. The convoy light also operates in this mode.

c. In the REDUCED or right position, the reduced head lights are utilized in addition to the blackout lighting. The dash instrument lights and map reading light can also be used.

51. Auxiliary power socket (Fig. 1-24 item 3)

A 2-pin socket is fitted in the dash as a power supply for the vehicle trouble light lead.

52. Panel light dimmer control (Fig. 1-24 item 4)

The instrument panel light intensity can be adjusted by the dimmer control, which functions irrespective of which of the three modes of lighting is selected. The switch also has an ON-OFF control.

53. Heater fan control switch (Fig. 1-24 item 5)

A three position rocker switch controls the heater fan as follows:

a. With the switch in the off position the heating and ventilation system is inoperative.

b. Low speed or high speed fan operation is provided when the switch is moved down to the first or second stop respectively. Air will be forced into the vehicle then ducted and heated as determined by the air distribution and heat control levers. The fan motor will only operate with the engine running or with the ignition on.

54. Air temperature control (Fig. 1-24 item 6)

The temperature control lever controls the temperature of the air from the heater unit. Moving the lever up in the direction of the blue arrow will cut off the heat, while moving the lever down toward the red arrow will increase the heat (see Fig. 1-4). Action is progressive between the two settings.

55. Air distribution control (Fig. 1-24 item 7)

The air distribution control lever controls the direction of air flow as follows (see Fig. 1-4):

a. With the lever in the lower position, all air is directed to the windscreen via the demister vents.

b. With the lever in the mid position, air is directed to the foot level vents as well as the windscreen.

c. With the lever in the upper position, the air is directed to the foot level vents although a certain amount of air will continue to pass through the demister vents to the windscreen.

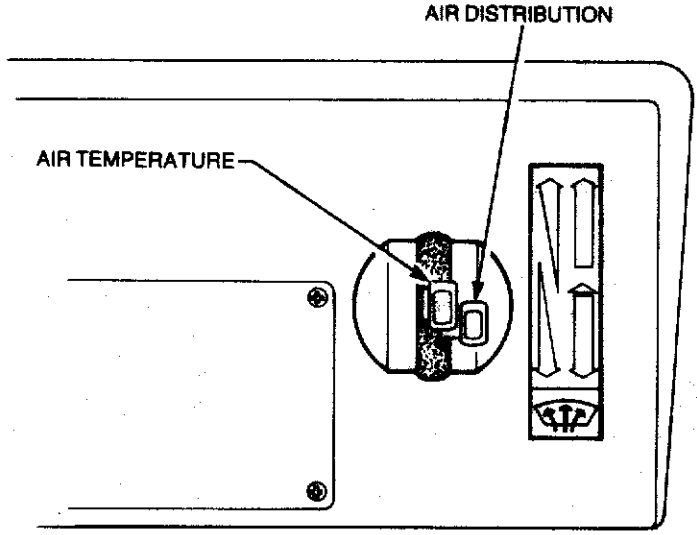

Figure 1-4 Air temperature and distribution controls

56. Fuel switch (Fig. 1-24 item 8)

A two position toggle switch is located on the dash, which when operated determines from which tank fuel will be drawn.

57. Transfer case control switch (Fig. 1-24 item 9)

The transfer case is fitted with a differential which allows the vehicle to be operated on road without transmission wind-up. The differential is lockable, to provide positive drive to the axles when necessary, and is controlled by a dash mounted two position switch. The switch should be pushed in for on road use and pulled out when traction is difficult, thereby providing positive six-wheel drive. When changing vehicle wheels the switch must be pulled out (refer to the warning on page 59).

58. Voltmeter — 24 volt (Fig. 1-24 item 10)

This meter measures the voltage of the modules 24 volt system. With the engine operating above idle speed, the voltmeter needle should be within the 24-28 volt (green band) range. If the voltage indicated is outside this range, and continues after approximately ten minutes, investigation of the 24 volt system is required.

59. Combination switch (Fig. 1-24 item 11)

The combination switch has six positions and provides control over the headlights, turn indicators and the horn. The combination switch functions are not available during blackout conditions. The switch operates as follows (see Fig. 1-5):

a. With the switch in the central position (A), the headlights will be dipped.

b. With the switch pushed away from the driver (B), the headlights will be on high beam.

c. Pulling the switch toward the driver (C), will flash the headlights. This operation can be achieved at any time, irrespective of other switch positions.

d. Pushing the switch knob inward (D), will operate the horn.

e. With the switch in the upper position (E), the right hand turn indicators will flash.

f. With the switch in the lower position (F), the left hand indicators will flash.

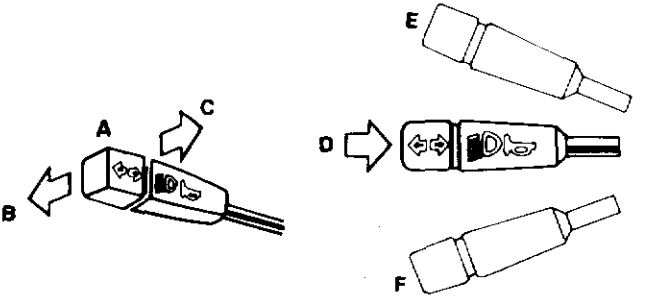

Figure 1-5 Combination switch operation

60. Speedometer and odometer (Fig. 1-24 item 12)

The speedometer indicates the road speed in kilometres per hour and the total distance travelled. A trip meter is incorporated in the speedometer together with its associated reset button.

61. Fuel gauge (Fig. 1-24 item 14)

One fuel gauge services both the left and right hand mounted fuel tanks. The approximate contents of each tank can be assessed by operating a dual purpose dash mounted switch — fuel will only be drawn from the tank indicated.

62. Warning light cluster (Fig. 1-24 item 15)

The warning lights provide a visual indication that a fault has occurred in one or more of the systems represented by the warning lights.

a. The oil pressure warning light (Fig. 1-6 item 2) indicates when the oil pressure is insufficient for safe engine operation. The light should illuminate when the ignition is turned on and extinguish once normal engine oil pressure is established. If this light illuminates during normal running, the vehicle should be stopped immediately and the cause determined.

b. The ignition warning light (Fig. 1-6 item 3) indicates a malfunction in the battery charging circuit. The light should illuminate when the ignition is turned on and extinguish once the engine is running.

c. The brake circuit warning light (Fig. 1-6 item 4) indicates that leakage has occurred from either the front or rear brake circuit. In this case, the light will illuminate when the foot brake is applied. In addition, a brake pad wear indicator is fitted to the front left hand caliper and will actuate the light when the brake pad lining thickness is reduced to approximately 3 mm. Normally, the light will illuminate momentarily when the ignition is turned on, then extinguish. If the light illuminates during normal running, the vehicle should be stopped immediately and the cause determined.

d. The turn indicator warning light (Fig. 1-6 item 5) flashes when the turn indicator lights are functioning. Both arrows will flash as the turn indicator is operated by the switch on the steering column. If the light does not flash, there may be a blown globe in the warning light or one of the turn indicators.

e. The high beam warning light (Fig. 1-6 item 6) illuminates when the headlight high beam has been selected. The light also illuminates when the headlight flasher is used.

f. The low fuel warning light (Fig. 1-6 item 7) illuminates when there is approximately nine litres of fuel left in either fuel tank and will remain illuminated until the fuel supply is replenished. When cornering, the light may flash intermittently before the fuel reaches the nine litre level.

g. Both the differential lock warning light (Fig. 1-6 item 8) and the six-wheel drive light (Fig. 1-6 item 1) will illuminate when the transfer case differential lock is engaged. Operation of the differential lock is necessary when traction to one or more wheels is likely to be lost.

h. The parking brake warning light (Fig. 1-6 item 12) will illuminate if the parking brake is applied while the ignition is on.

i. The trailer warning light (Fig. 1-6 item 13) provides an indication that the turn indicators on a towed trailer are functioning correctly. The light will flash simultaneously with the vehicle turn indicator warning light when a trailer is connected to the vehicle's NATO socket. When no trailer is used, the light will flash momentarily each time the combination switch is moved up or down. In addition, the trailer warning light will flash when the hazard warning switch is activated.

j. The park light warning light (Fig. 1-6 item 15) indicates when the park lights have been switched on.

k. The cold start warning light (Fig. 1-6 item 17) illuminates when the starter switch is in the glow plugs on position.

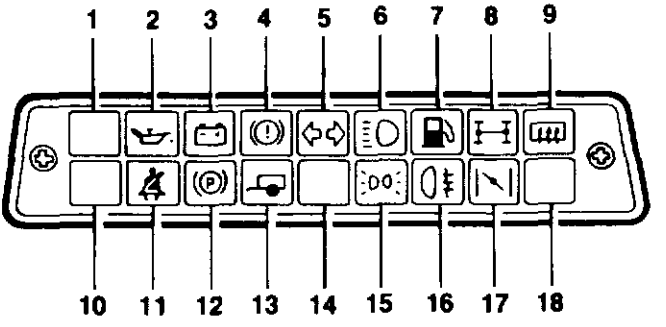

1.	Six-wheel drive	Red	10.	Not used	Red
2.	Oil pressure	Red	11.	Not used	Red
3.	Ignition	Red	12.	Parking brake	Red
4.	Brake circuit	Red	13.	Trailer	Green
5.	Turn indicators	Green	14.	Not used	Green
6.	High beam	Blue	15.	Park lights on	Green
7.	Low fuel	Amber	16.	Not used	Amber
8.	Differential lock	Amber	17.	Cold start (glow plugs)	Amber
9.	Not used	Amber	18.	Not used	Amber

Figure 1-6 Warning lights

63. Coolant temperature gauge (Fig. 1-24 item 16)

Under normal running conditions, the temperature gauge needle should be within the green band. When operating in high ambient temperatures, with heavy loads or on steep grades at high altitudes, the operating temperature could rise. However, if the needle rises into the red band, the vehicle should be stopped and the cause determined.

64. Voltmeter — 12 volt (Fig. 1-24 item 17)

The voltmeter measures the vehicle system voltage. With the engine running above idle speed, the needle should be within the green band (12-14 volts). A reading above this in the high red band, which con-tinues after approximately ten minutes, is too high and should be investigated. Similarly, a reading in the low red band which continues after approximately ten minutes, with no electrical load switched on, is too low and should also be investigated.

65. Windscreen washer and wiper switch (Fig. 1-24 item 18)

The windscreen washer and wiper switch is a five position switch, which only operates when the ignition is on. Switch operation is as follows (see Fig. 1-7):

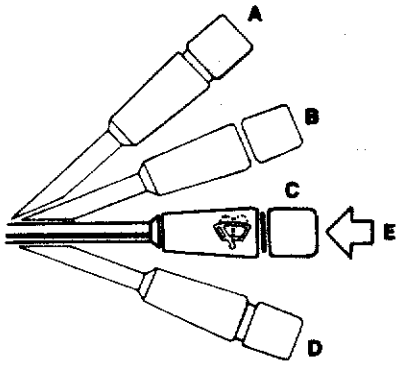

Figure 1-7 Windscreen washer and wiper control

a. With the switch in the upper position (A), fast wiper action is achieved.

b. With the switch in the second position (B), slow wiper action is achieved.

c. With the switch in the third position (C), the wipers are off.

d. With the switch in the lower position (D), the wipers will operate at the slow speed until the switch is released.

e. Pushing the switch knob inward (E) will activate the windscreen washer, which will spray water on the windscreen until the knob is released. This can be achieved with the switch on or off.

66. Cab dome light switch (Fig. 1-24 item 19)

The cab dome light switch is a two position rocker action switch. Pressing the lower section of the switch turns the dome light on and pressing the upper section of the switch turns the dome light off (see Fig. 1-8). The dome light will not function during blackout conditions.

67. Hazard warning switch (Fig. 1-24 item 20)

The hazard warning switch is a two position rocker action switch. By pressing the lower section of the switch, both the left and right hand turn indicators, together with the side repeaters, flash simultaneously. A globe in the switch also illuminates to indicate that the switch is on. In addition, the trailer warning light will flash when the hazard warning switch is activated. Pressing the upper section of the switch turns the hazard warning lights off (see Fig. 1-8). Hazard warning lights will not function during blackout conditions.

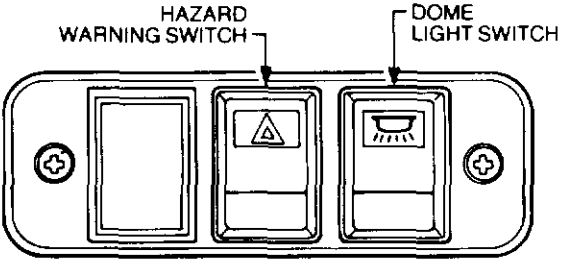

Figure 1-8 Hazard warning and cab dome light switches

68. Hand throttle (Fig. 1-24 item 21)

The hand throttle control can be used to over-ride the accelerator pedal to set engine speed. To utilize the hand throttle, first set the engine speed with the accelerator then pull out the hand throttle and turn the control to lock it in position. The accelerator will over-ride the hand throttle setting when increasing the engine speed. However, when the accelerator is released, the engine will return to the speed set by the hand throttle. To release the hand throttle, turn the knob and push the control fully down to the closed position.

69. Bonnet release (Fig. 1-24 item 22)

The bonnet release handle is located to the right of the steering column, and by pulling the handle, the bonnet catch will release. From the front of the vehicle, lift the safety catch lever and raise the bonnet. Pull the support stay forward to secure the bonnet in the open position. The bonnet safety catch is illustrated in Fig. 1-9.

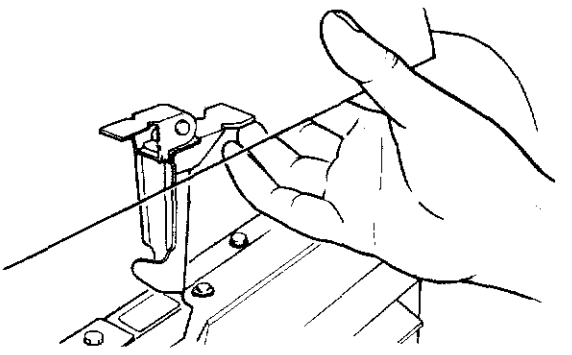

Figure 1-9 Bonnet safety catch

70. Accelerator pedal (Fig. 1-24 Item 23)

The accelerator pedal controls the engine speed via the accelerator cable. Depress the pedal to increase engine speed.

71. Foot brake pedal (Fig. 1-24 item 24)

The foot brake pedal controls the application of the service brakes to all six wheels. Depress the pedal progressively to apply increased braking pressure.

72. Starter switch (Fig. 1-24 Item 25)

The starter switch is a four position switch, providing control over the ignition, glow plugs and starter motor. The switch is turned clockwise to activate the vehicle electrical system.

73. Main lighting switch (Fig. 1-24 Item 26)

The main lighting switch is a three position switch, providing control over the lighting as follows (see Fig. 1-10).

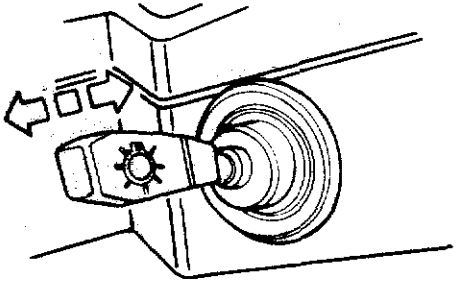

Figure 1-10 Main lighting switch

a. With the switch pulled toward the driver, all lights will be off.
b. With the switch in the centre position, the park lights will be illuminated.

c. With the switch pushed away from the driver, both the main and park lights will be illuminated.

74. The main lighting switch will not function during blackout conditions.

75. Clutch pedal (Fig. 1-24 item 27)

Depress the clutch pedal to disengage the clutch.

76. Cigar lighter (Fig. 1-24 item 28)

Push the lighter in to operate. The lighter will automatically return to the normal position when ready for use.

77. Parking brake lever (Fig. 1-24 item 29)

The parking brake is applied by pulling the lever up. To release the brake, pull the lever slightly up, depress the release button and push the lever down. Application of the parking brake will illuminate a warning light on the instrument panel.

78. Gear lever (Fig. 1-24 item 30)

The gear lever is used to manually change the gear ratios in the transmission. The gear change pattern is illustrated in Fig. 1-11.

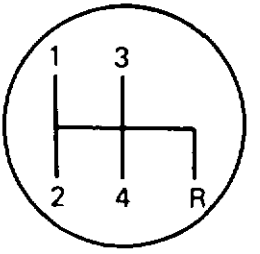

Figure 1-11 Gear change pattern

79. Transfer case shift lever (Fig. 1-24 item 31)

The transfer case shift lever provides the manual selection of high or low gear ratios as required. The ratio shift pattern is illustrated in Fig. 1-12.

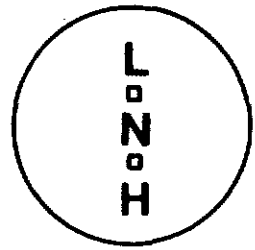

Figure 1-12 Transfer case shift pattern

80. Fuse box (Fig. 1-24 item 32)

Removing the fuse box cover allows access to the fuses. The location of each fuse is provided by the decals as shown in Fig. 1-13.

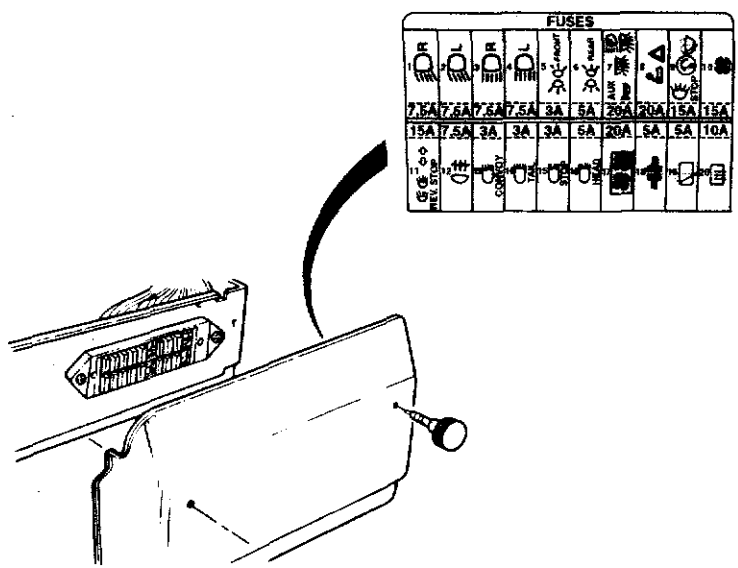

Figure 1-13 Fuses

81. The stop/start control motor is protected by a 10 amp fuse located under the bonnet to the side of the brake master cylinder.

82. Map reading light (Fig. 1-24 item 33)

The map reading light switch is located on the end of the light unit. The light can only be utilized when the ignition is on.

83. Cabin seating (Fig. 1-14)

The central cabin seat back can be tilted foward and utilized as a platform by the observer using the roof hatch, and the fore and aft movement can be adjusted as illustrated in Fig. 1-14.

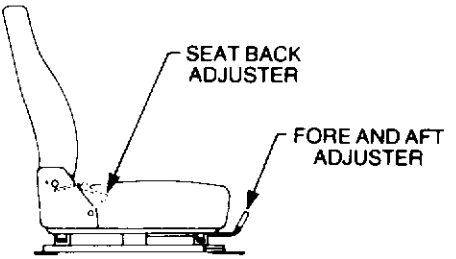

Figure 1-14 Seat adjustment

Body and Chassis Fittings

84. Vehicle body construction

The chassis frame is an all welded construction type, consisting of box section steel runners and crossmembers. The frame is hot dipped galvanized to prevent the formation of rust. One crossmember is detachable to simplify servicing. The cab consists of pressed aluminium and fibreglass panels that form the engine compartment bolted to a galvanized steel frame.

NOTE

The body, chassis and engine have certain common features with other variants to allow for variant transfer throughout the life of the fleet. It is not intended that this occur regularly but allow flexibility in fleet management should circumstances dictate.

85. Comsec module construction

The module consists of a welded galvabond tubular steel frame with a fibreglass outer skin bonded to the frame. The interior walls and ceiling are constructed from fibreglass and the floor is constructed from wood.

86. Stowage

A stowage bin is provided in each side of the rear body section, behind the rear wheels. These bins are lockable and the key is located in a canvas pocket secured to the right hand side of the seat box.

87. Rear window (Fig. 1-15)

A sliding window is fitted to the rear of the cab.

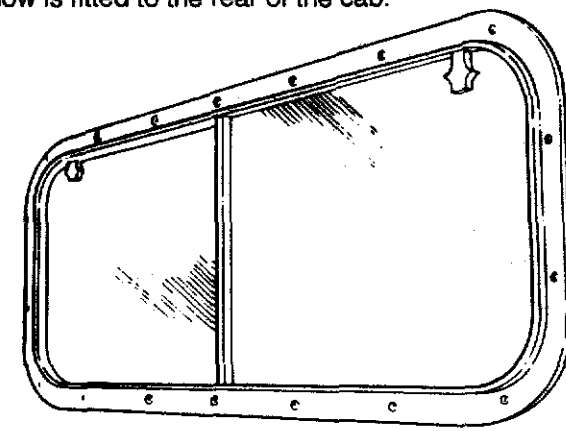

Figure 1-15 Rear window

88. Roof hatch (Fig. 1-16)

A roof hatch is fitted to the roof panel to provide an observation hatch.

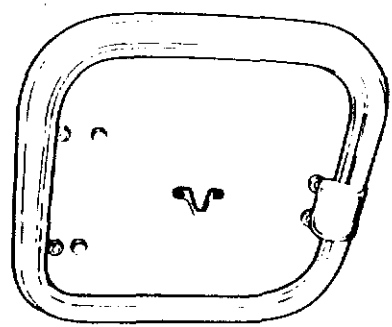

Figure 1-16 Roof hatch

89. Rear side windows (Fig. 1-17)

Rear side windows are fitted to the cabin to provide ventilation. They may be locked in either the open or closed position by an over-centre catch.

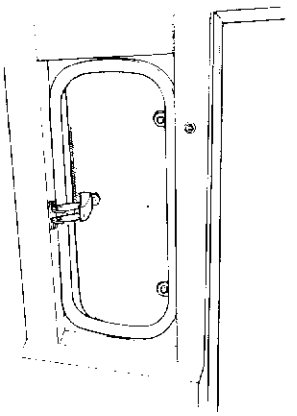

Figure 1-17 Rear side window

90. Jerrican stowage

Two jerricans can be stowed, in carriers, on the right hand side of the vehicle behind the cab.

91. Rifle clips and butt boxes

There are facilities to mount two rifles between the seats in the cabin and on either side of the module rear door opening.

92. Fire extinguishers

Two fire extinguishers are fitted to the vehicle. A 1.5 kg BCF is located on the rear bulkhead behind the cabin seats and a 3.0 kg BCF is located on the inside of the rear door of the module.

93. De-ditching tools

The de-ditching tools are mounted in brackets fitted to the bonnet. The tools comprise one axe, one shovel and one pick with handle.

94. Spare wheel stowage

The spare wheel is stowed under the vehicle behind the rear axle and is secured by a chain. The wheel is lowered from the stowed position by using the wheel brace to operate a winch drive (see Fig. 1-18) situated behind the left hand rear mudguard. The spare wheel is positively locked in the travelling position by a brake in the winch mechanism. When raising the spare wheel an additional resistance to movement of the wheelbrace, indicates the spare is correctly stowed. The spare wheel can be lowered by rotating the wheel brace in a counter clockwise direction.

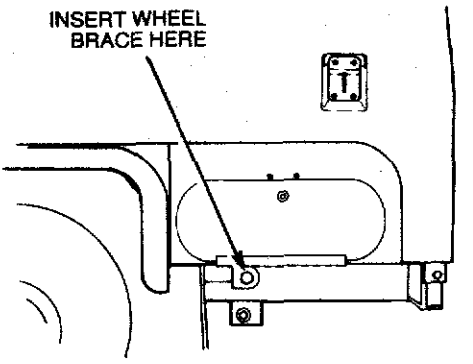

Figure 1-18 Spare wheel lowering

95. Electrical trailer connection sockets

A 12-pin NATO trailer connection socket is fitted to the rear of the left hand chassis rail. A supplementary, 7-pin, Utilux connection is fitted to the rear of the right hand chassis rail. Although this is wired in a conventional manner, it is not intended for use with trailers.

96. Towing pintle

A removable towing pintle is secured to the rear crossmember of the vehicle by four bolts, washers and nuts to allow for removal if necessary.

97. Seat belts

Inertia reel lap/sash seat belts are fitted to the outer cabin seats. The centre seat has a lap belt only fitted.

98. Rear vision mirrors

The external rear vision mirrors are hinged to fold back (inward) when knocked or bumped, thus reducing damage during cross country operations.

99. Battery box

Two batteries are housed in a box forward of the left hand rear mudguard and are accessed through a lift up lid. A label detailing battery replacement procedures is affixed to the inside of the lid.

100. Vehicle nomenclature plate (Fig. 1-19)

The vehicle manufacturer's identification number is stamped on a plate that is riveted to the passenger's seat box. The identification number is also stamped on the right hand side of the chassis, forward of the spring mounting turret.

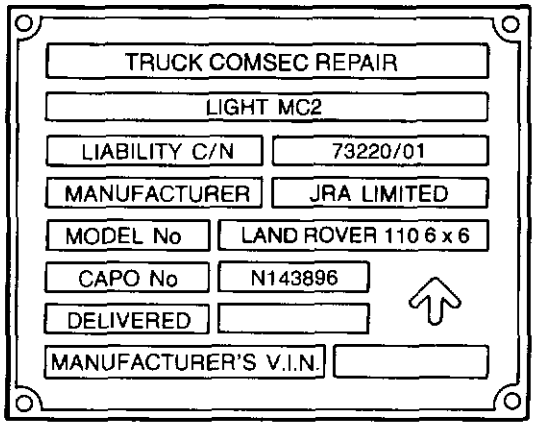

Figure 1-19 Vehicle nomenclature plate

101. Servicing data plate (Fig. 1-20)

The vehicle servicing data plate is riveted to the passenger's seat box, adjacent to the vehicle nomenclature plate.

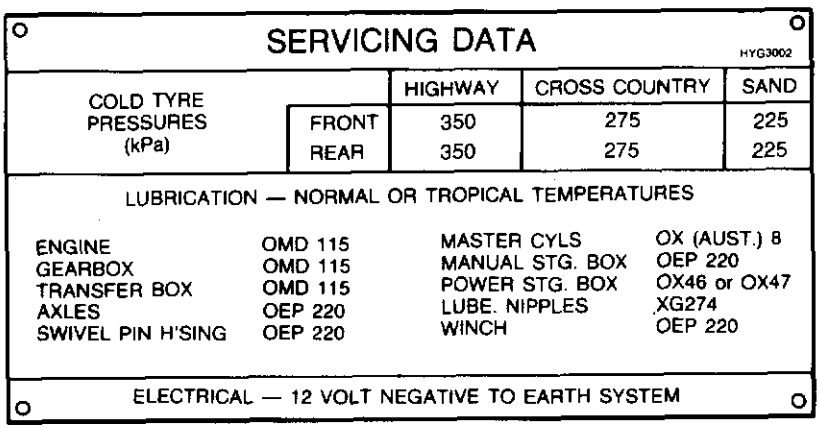

Figure 1-20 Servicing data and tyre pressure plate

102. Shipping data plate (Fig. 1-21)

A shipping data plate is riveted to the passenger's seat base just below the servicing date plate.

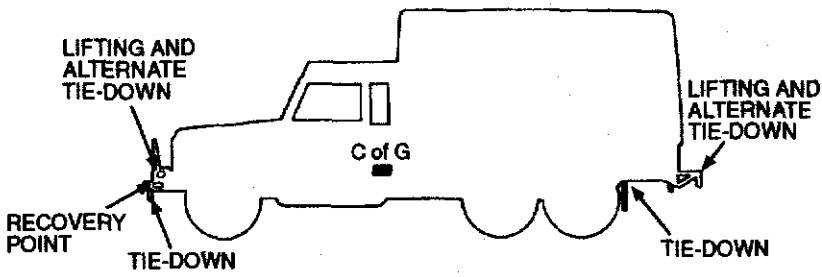

Figure 1-21 Shipping data plate

103. Towing and dyno test data plate (Fig. 1-22)

The towing and dyno test plate is riveted to the driver's seat box. See para. 234 for propeller shaft removal precautions.

TOWING AND DYNO TEST DATA

FLAT AND LIFT TOWING — DISTANCE UNDER 200 KM

. SET GEARBOX AND TRANSFER CASE IN NEUTRAL.
.. SET TRANSFER BOX CONTROL SWITCH IN "ON-ROAD" POSITION.
... ENSURE DIFF LOCK & 6WD WARNING LIGHTS ARE NOT ILLUMINATED.

FOR DISTANCE OVER 200 KM

. REMOVE PROPELLER SHAFTS AND REPEAT ABOVE

DYNO TEST ON FRONT AXLE

. REMOVE PROPELLER SHAFTS FROM BOTH REAR AXLES
.. SET TRANSFER BOX CONTROL SWITCH TO "CROSS COUNTRY"
... ENSURE DIFF LOCK WARNING LIGHT IS ILLUMINATED

HYG 2951

Figure 1-22 Towing and dyno test data plate

104. Jacking plate (Fig. 1-23)

A jacking plate is fitted to the stowage area lid as well as to the jack itself.

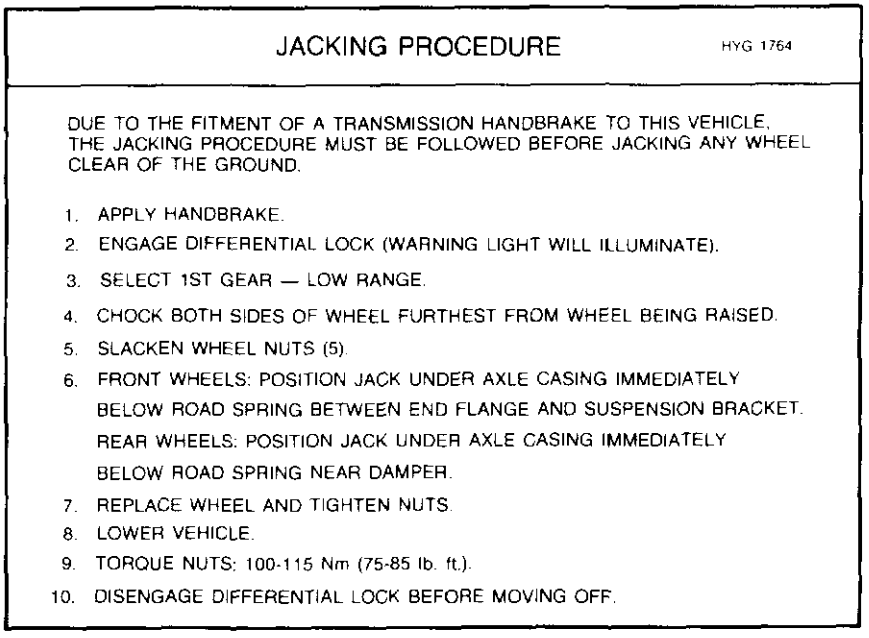

JACKING PROCEDURE HYG 1764

DUE TO THE FITMENT OF A TRANSMISSION HANDBRAKE TO THIS VEHICLE, THE JACKING PROCEDURE MUST BE FOLLOWED BEFORE JACKING ANY WHEEL CLEAR OF THE GROUND.

1. APPLY HANDBRAKE.
2. ENGAGE DIFFERENTIAL LOCK (WARNING LIGHT WILL ILLUMINATE).
3. SELECT 1ST GEAR — LOW RANGE.
4. CHOCK BOTH SIDES OF WHEEL FURTHEST FROM WHEEL BEING RAISED.
5. SLACKEN WHEEL NUTS (5).
6. FRONT WHEELS: POSITION JACK UNDER AXLE CASING IMMEDIATELY BELOW ROAD SPRING BETWEEN END FLANGE AND SUSPENSION BRACKET.
   REAR WHEELS: POSITION JACK UNDER AXLE CASING IMMEDIATELY BELOW ROAD SPRING NEAR DAMPER.
7. REPLACE WHEEL AND TIGHTEN NUTS.
8. LOWER VEHICLE.
9. TORQUE NUTS: 100-115 Nm (75-85 lb. ft.).
10. DISENGAGE DIFFERENTIAL LOCK BEFORE MOVING OFF.

Figure 1-23 Jacking procedure plate

105. Centre of gravity (C of G) designation plate

A "C of G" plate designating the longitudinal point of balance of the unladen vehicle is fitted to the left hand sill panel. See Fig. 1-3 for C of G dimensions.

106. Unit/formation signs

Four unit/formation sign holders are fitted to the vehicle. Two are riveted just below the headlights and the other two are riveted to brackets on the rear crossmember.

107. Bridge classification sign

Due to the size and weight of this vehicle, no bridge classification sign is fitted.

108. Camouflage net lashing points

Lashing points are provided on each side of the module for securing camouflage equipment. Lashing points are also incorporated on the module roof.

NOTE

These lashing points are not to be subjected to high tension loadings.

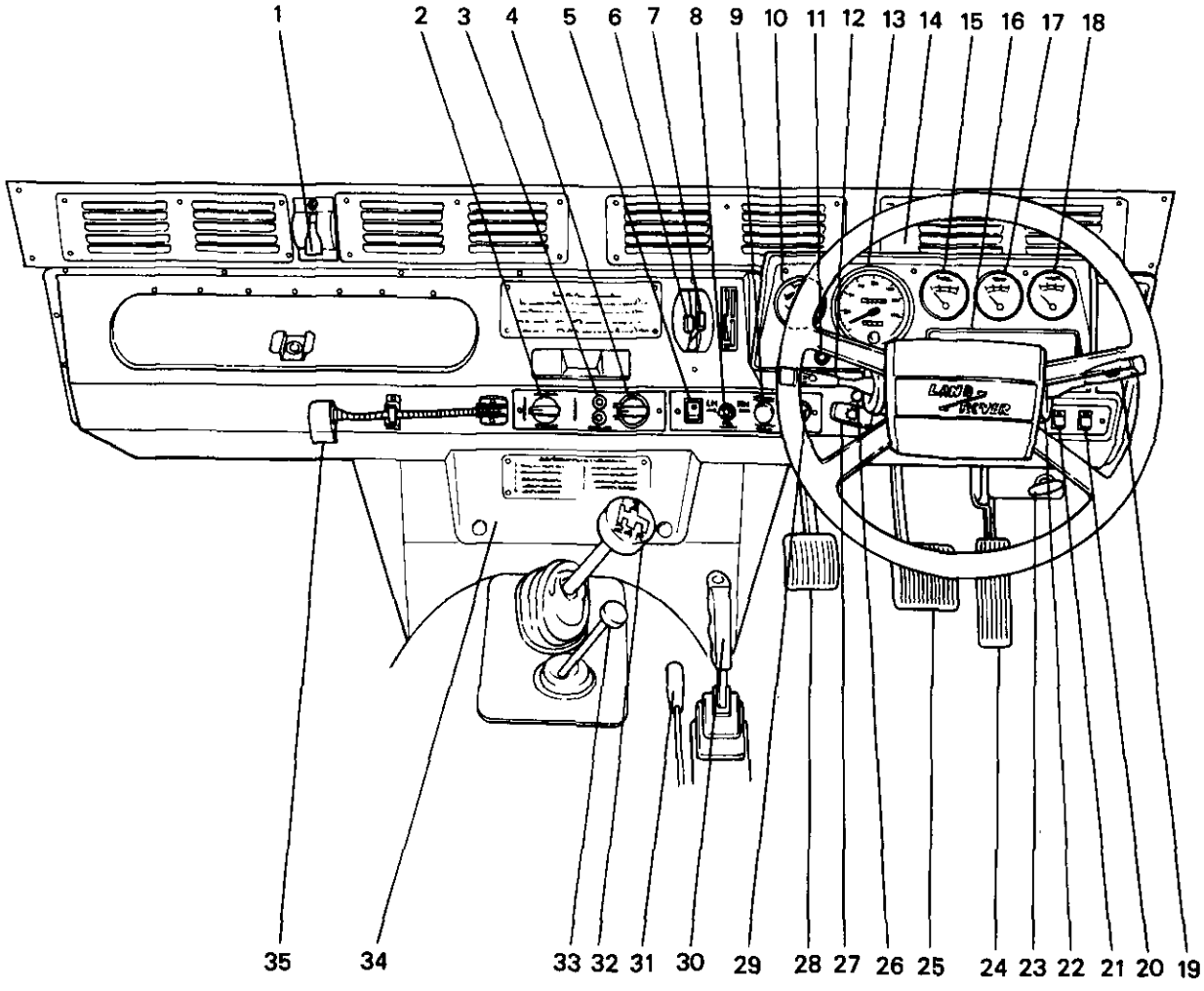

1. Ventilator control
2. Lighting control
3. Auxiliary power
4. Panel light dimmer control
5. Heater fan control
6. Air temperature control
7. Air distribution control
8. Fuel switch
9. Transfer case control
10. Voltmeter (24V)
11. PTO warning light
12. Combination switch
13. Speedometer
14. Ventilator control
15. Fuel gauge
16. Warning light cluster
17. Temperature gauge
18. Voltmeter (12V)
19. Windscreen washer and wiper switch
20. Cab dome light switch
21. Hazard warning switch
22. Hand throttle
23. Bonnet release
24. Accelerator pedal
25. Brake pedal
26. Starter switch
27. Main lighting switch
28. Clutch pedal
29. Cigar lighter
30. Parking brake lever
31. Winch/PTO control
32. Gear lever
33. Transfer case shift lever
34. Fuse box
35. Map reading light

Figure 1-24 Instruments, electrical accessories and controls

CHAPTER 2

OPERATING INSTRUCTIONS

SECTION 1 — WARRANTY AND REPAIR

SECTION 2 — VEHICLE OPERATION

SECTION 1
WARRANTY AND REPAIR

Warranty provisions

201. The Contractor Rover Australia (RA) accepts responsibility for warranty in respect to the whole vehicle (except GFE items other than the mounting of such items) for a period of 12 months or 20 000 km, whichever occurs first from the time of issue of vehicle to user unit. Where vehicles are delivered to supply depots for extended storage, the depot becomes the user unit.

202. Where a vehicle is delivered into storage, provision is made for the warranty to be suspended for up to two years. Should the vehicle enter service during the two year period, then a pro-rata warranty applies in accordance with Table 2-1.

Table 2-1 Pro-rata warranty

Time of Withdrawal from Storage (measured from day of delivery into storage)	Period of Warranty after Withdrawal from Storage (whichever expires first)	
	Distance (km)	Time (mths)
First day of 1st month — last day of 3rd month	20 000	11
First day of 4th month — last day of 6th month	18 000	10
First day of 7th month — last day of 9th month	16 000	9
First day of 10th month — last day of 12th month	14 000	8
First day of 13th month — last day of 15th month	12 000	7
First day of 16th month — last day of 18th month	10 000	6
First day of 19th month — last day of 21st month	8 000	5
First day of 22nd month — last day of 24th month	6 000	4*
First day of 25th month — last day of 27th month	3 000	3*

***NOTE**: The warranty finally expires after twenty-seven (27) months irrespective of any outstanding distance or time pro-rata warranty.

Special provisions

203. The warranty shall not apply where failure arises from:

a. Vehicle not being maintained in accordance with User Handbook or EMEI manuals.

b. EMEI storage procedures not being effectively applied.

c. Misuse or neglect.

d. The fitting of non-genuine parts, and where it is mutually agreed as a contributing factor.

e. The use of equipment not normally or reasonably associated with the operation of the supplies.

f. Supplies that have been altered in form or function without consultation with and approval of the Contractor.

g. Any part or parts of which the specification has been altered by the Commonwealth without the Contractor's approval.

h. Any part or parts from which the identification marks or numbers have been altered or removed by the Commonwealth.

i. Repairs which involved or resulted from either directly or indirectly the use of non-genuine parts.

j. Incorrect tuning, adjustments or maintenance operations which are associated with periodic servicing requirements.

k. Parts or equipment which have not been supplied by the Contractor or by a supplier approved by the Contractor and any problems which may arise, either directly or indirectly from the fitment of such equipment.

l. The consequences of the supplies having been repaired by a non-approved repairer. For the purpose of this clause, approved repairer shall include Army vehicle maintenance personnel.

Application of warranty

204. The application of the warranty will be by repair or replacement of the defective component at no cost to the Commonwealth.

205. Provision is made for warranty repairs to be carried out by RA Limited authorised Land Rover dealers and a list of such dealers is included in this publication.

206. However, if for reasons of distance, location etc., it is not practical to have the necessary repairs carried out by a RA Limited authorised Land Rover dealer, then an Army tradesman is approved to carry out the repair. This procedure should be adopted in the case of emergency or essential repairs only (e.g. for safety, prevention of further damage or an operational requirement).

207. In such circumstances, RA Limited will reimburse the Army for parts used at cost and labour at standard repair times and the prevailing Land Rover dealer warranty hourly labour rate.

208. The information required to be documented by the Army unit in such circumstances is:

a. Identify the vehicle by chassis and or Army registration number.

b. Date vehicle entered service (if known).

c. Current odometer reading.
d. Nature of failure (brief explanation).
e. Nature of repair necessary.
f. Parts replaced by designation and part number.
g. Time taken or Standard Repair Time (SRT) and operation number (refer to EMEI VEH A 119-22).
h. If parts were procured through a Land Rover dealer, then documentation identifying purchase and price paid.
i. RA Authority Number (if applicable).

209. The procedure for submitting a claim to RA Limited to obtain reimbursement is defined in EMEI VEH A 119-22.

Prior consultation

210. Where a vehicle is presented to an authorised RA Limited Land Rover dealer for warranty repairs, the Army need not be concerned as the dealer has adequate authority to deal with most situations and the necessary procedure to obtain authority in the case of major repairs.

211. In circumstances where the Army are themselves undertaking a warranty repair, this may proceed without authority provided the estimated total material and labour cost is less than $500. If the cost is estimated to be in excess of $500, then the appropriate RA Limited State Office listed in Table 2-2 should be contacted for authority and guidance.

212. The person making the contact should have the following information available:

a. Vehicle chassis and Army registration number.
b. Date in service (if known).
c. Current odometer reading.
d. Knowledge of the problem encountered.

Continuance of warranty following a warranty repair

213. Any supplies corrected or furnished by way of replacement under warranty claim, whether it be an initial equipment supply or replacement part, will enjoy the balance of any existing warranty.

Warranty on replacement parts and MSIs

214. Except when fitted in the execution of a warranty repair, replacement parts and MSI's enjoy the same warranty as the vehicle and in general terms as applicable the same special provisions apply (see para. 203).

Pre expiration warranty checks

215. Vehicles are to be inspected by RAEME Technical Support personnel prior to expiry date of the warranty. Refer EMEI VEH A 119-22.

Table 2-2 RA State Offices

RA State Offices	Telephone	Facsimile
Australian Head Office Rover Australia Pty Limited 12 Riverside Centre 148-308 James Ruse Drive PO Box 3846 PARRAMATTA NSW 2124	(02) 685 5139	(02) 687 2180
New South Wales State Office (Responsible for NSW and ACT) Rover Australia Pty Limited 12 Riverside Centre 148-308 James Ruse Drive PO Box 3846 PARRAMATTA NSW 2124	(02) 685 5140	(02) 687 2180
Victoria State Office (Responsible for Victoria and Tasmania) Rover Australia Pty Limited Level 1, 58 Clarke Street SOUTH MELBOURNE VIC 3205	(03) 690 0510	(03) 690 0350
Queensland State Office (Responsible for Queensland) Rover Australia Pty Limited Chancellor Corporate Centre Suite 18, Level 1 15 Leichardt Street SPRING HILL QLD 4000	(07) 834 4890	(07) 831 0036
Western Australia State Office (Responsible for WA, SA and NT) Rover Australia Pty Limited Level 22 St Martin's Tower, 44 St Georges Terrace PERTH WA 6000	(09) 268 2571	(09) 268 2575

SECTION 2
VEHICLE OPERATION

217. General

Proper operation determines the service life and operating economy of the vehicle. This includes, careful driving, normal road speeds, reasonable rates of acceleration and braking and changing gears in a manner to avoid shock loading and labouring.

218. Before starting

Carry out a first parade service as detailed in Chapter 3 Section 1.

219. Before starting the engine

Ensure that the parking brake is applied. Depress the clutch pedal fully to disengage the clutch then move the gear lever to neutral.

220. Starting the engine

CAUTION

DO NOT ACCELERATE THE ENGINE IMMEDIATELY AFTER STARTING, OTHERWISE DAMAGE TO THE TURBOCHARGER WILL RESULT THROUGH LACK OF LUBRICATION.

NOTE

The glow plugs need only be used to start the engine when the vehicle is operating continually in low ambient temperatures (below 5°C), and then for no longer than five seconds.

Depress the accelerator pedal approximately half way and hold the pedal in this position while turning the ignition switch clockwise to start the engine. As the switch is turned to the first position (see Fig. 2-1), the oil pressure, battery charge and parking brake warning lights will illuminate. In the next switch position the glow plug light illuminates, but do not hold the switch in this position unless cold operating conditions are experienced. Turn the switch fully to engage the starter motor, then release the switch and return the accelerator pedal to the idle position once the engine has started. All warning lights except the parking brake light should now be extinguished.

NOTE

Do not operate the starter motor continuously for longer than ten seconds without a pause.

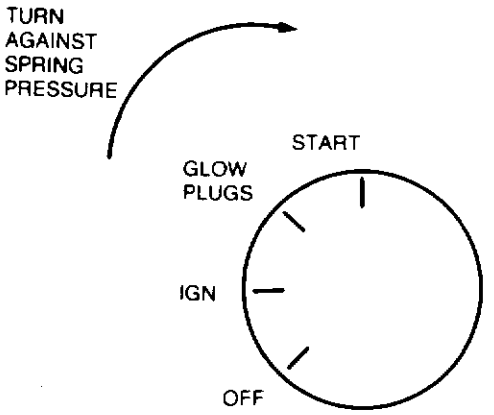

Figure 2-1 Starter switch positions

221. Moving the vehicle

a. With the engine operating, disengage the clutch by pushing the pedal to the floor. Select high ratio or low ratio on the transfer case shift lever, depending on the vehicle load and terrain.

NOTE

Changing from high to low or low to high ratio should only be attempted when the vehicle is stationary. Should difficulty be encountered when engaging high or low ratio, do not force the lever. With the engine running, engage a gear with the main gear lever and release the clutch momentarily, then return the main gear lever to neutral and try the transfer case shift lever again.

b. Select first gear on the gear lever then release the parking brake. If the parking brake warning light does not extinguish, do not attempt to move the vehicle.

c. Engage the clutch smoothly by releasing the clutch pedal and simultaneously depressing the accelerator pedal the amount necessary for the engine to move the load.

NOTE

Never allow the foot to RIDE the clutch pedal with the clutch engaged. This causes premature clutch wear.

d. As the vehicle gains speed, continue changing gear until cruising speed is achieved and the transmission is in the highest gear possible without labouring the engine.

Good driving habits

222. Engine temperature

Allow the engine to reach normal operating temperature before engaging in high speeds or hauling heavy loads.

WARNING

SHOULD THE ENGINE BECOME OVERHEATED, PARK THE VEHICLE IN A SAFE WORKING AREA AND ALLOW THE ENGINE TO COOL BEFORE ATTEMPTING REPAIRS TO, OR REFILLING OF, THE COOLING SYSTEM.

223. Instruments

Glance at the instruments frequently. If a fault is indicated, assess the corrective action required and stop the vehicle as necessary.

224. Clutch

To avoid damage, engage the clutch with a smooth action. Do not RIDE the clutch.

225. Gear changing

Ensure than the correct gear is selected for the terrain, vehicle load and speed.

226. Braking

Avoid sudden stops. When stopping on slippery surfaces, smoothly apply and release the brakes alternately, to prevent skidding. When slowing to a halt, leave the clutch engaged as long as possible to utilize the engine braking effect. Before descending steep slopes, select first gear, low ratio with the differential locked to provide maximum engine braking.

227. Stopping the engine

CAUTION

BEFORE SHUTTING DOWN THE ENGINE, ALLOW THE ENGINE TO IDLE FOR SEVERAL MINUTES TO ALLOW THE TURBOCHARGER TEMPERATURE TO STABILIZE AND THE ROTATIONAL SPEED OF THE TURBINE TO SLOW DOWN, OTHERWISE DAMAGE TO THE TURBOCHARGER WILL RESULT THROUGH LACK OF LUBRICATION.

Allow the engine to return to the normal idle speed before turning the ignition off.

228. Parking

Use the parking brake when parking the vehicle. Check frequently to ensure that the brake is adjusted to lock and hold the vehicle when parked. Do not use the parking brake when the vehicle is in motion, except in an emergency. When parking on an incline, leave the vehicle in gear.

229. Fording

The maximum advisable fording depth is 500 mm. When fording is to be undertaken, ensure that the flywheel housing drain plug is securely fitted (see Fig. 2-2). If deep water is anticipated, loosen the fanbelt to prevent damage to the fan or radiator, and saturation of the electrical system. Avoid excessive speed.

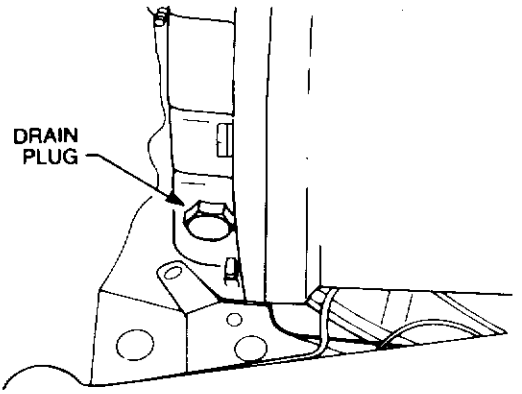

Figure 2-2 Flywheel housing drain

230. Once the crossing has been accomplished, drain the flywheel housing and tighten the fanbelt. Ensure that the brakes are dry and fully effective before proceeding.

NOTE

After fording, check the oil in the engine, transmission, transfer case and swivel pin housing for signs of water contamination. Change contaminated oils as soon as possible.

231. Cross country driving

WARNING

BECAUSE OF THE EXCELLENT ROUGH TERRAIN CHARACTERISTICS OF THIS VEHICLE, DRIVERS ARE CAUTIONED TO MAINTAIN A SAFE SPEED FOR THE CONDITIONS ENCOUNTERED, ESPECIALLY WHEN TOWING A TRAILER OR UTILIZING TYRE CHAINS.

NOTE

The mobility of this vehicle is greatly enhanced if correct tyre pressures are maintained, and in extreme conditions, tyre chains are used.

The transfer case differential lock should be utilized for cross country driving, ie. off formed roads and tracks. When activated, the differential lock warning light will illuminate indicating that the dog-clutch in the transfer case is fully engaged. Although the differential lock can be engaged while the vehicle is moving, no power should be applied to the transmission during this operation.

NOTE

Under some conditions, a slight delay may be experienced before the warning light illuminates. This is due to the time required for the dog-clutch to align with its mating splines and become fully engaged.

232. On reaching normal road conditions, the differential lock must be disengaged.

NOTE

Under some conditions, a slight delay may be experienced before the warning light extinguishes after the switch is pushed in. If the warning light does not extinguish, this indicates that the dog-clutch is not fully disengaged. This is usually due to transmission wind-up which jams the dog-clutch. If the warning light does not extinguish within 100 metres of the switch being pushed in, the vehicle should be stopped and reversed a few metres to unwind the transmission. The warning light should now extinguish. If not, do not continue as serious damage may occur.

Changing a wheel

233. To replace a flat tyre with the spare wheel, proceed as follows:

a. Remove the hydraulic jack, handle and jack base plate, from the stowage bin.

b. Engage the differential lock and check that the differential lock warning light illuminates.

NOTE

If the vehicle has been stationary prior to changing the wheel, the differential lock may not engage when selected. In this case, it will be necessary to start the engine, engage a gear and release the clutch sufficiently to allow slight movement of the gears, until the warning light is illuminated. Switch off the engine.

c. Ensure that the parking brake is applied and that the wheels are chocked.

WARNING

THE PARKING BRAKE ACTS ON THE TRANSMISSION, NOT THE REAR WHEELS. THE DIFFERENTIAL LOCK MUST BE ENGAGED AND THE WHEELS CHOCKED TO ENABLE THE VEHICLE TO BE RAISED SAFELY WITH THE VEHICLE JACK.

d. Engage first gear in the transmission and low range in the transfer case.

e. Position the jack under the vehicle as follows:

(1) Front wheel. Position the jack so that when raised, it will engage with the front axle casing immediately below the coil spring, where it will locate between the flange at the end of the axle casing and the large bracket to which the front suspension members are mounted (see Fig. 2-3).

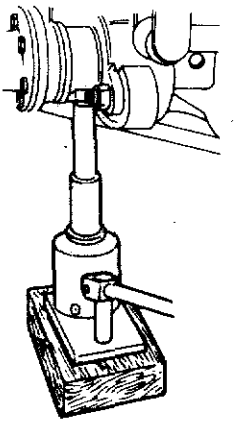

Figure 2-3 Jack position — front wheels

(2) Rear wheel. Position the jack so that when raised, it will contact the axle tube between the spring and the shock absorber bracket (see Fig. 2-4).

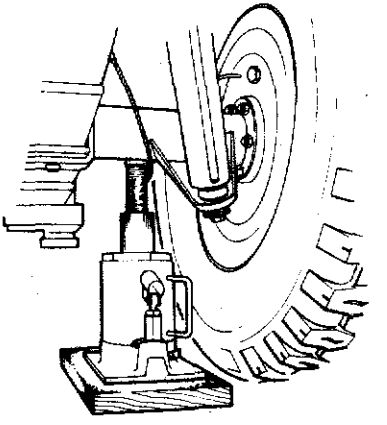

Figure 2-4 Jack position — rear wheels

f. Before raising the vehicle, lower the spare wheel to the ground and remove it from under the vehicle, then using the wheel brace, initially slacken the nuts on the wheel to be removed.

g. Jack up the appropriate corner of the vehicle. When the wheel is clear of the ground, remove the wheel nuts and lift off the wheel.

h. Ensure that the wheel nuts and studs are clean then fit the spare wheel and secure with the wheel nuts. Tighten the wheel nuts.

i. Lower the vehicle to the ground and torque the wheel nuts to 100-115 Nm (75-85 lb.ft) in the correct sequence (diagonally opposite). Use hand pressure only. Do not use foot pressure or extension tubes as this could overstress the wheel studs.

j. Remove the jack and the wheel chocks then disengage the differential lock.

Towing the vehicle

234. The following precautions must be taken before this vehicle is towed:

WARNING

WHEN USING REAR LIFT RECOVERY, EXTREME CAUTION MUST BE OBSERVED.

a. Set the transmission and transfer case to neutral.

b. Set the transfer case control switch to the on-road position.

c. Ensure that the differential lock warning light is extinguished. If the warning light fails to extinguish, both the front and rear propeller shafts are to be removed.

d. When the front propeller shaft is to be removed, the flange mounting bolts must be secured with nuts or wire to prevent damage to the transmission casing.

e. Welded to the bullbar and the rear crossmember are two towing eyes which are used as fixed mounting points to allow for the attachment of an A frame to facilitate vehicle recovery.

Battery replacement — 24 volt

235. To replace the batteries, proceed as follows:

a. Stop the engine and ensure that the parking brake is applied.

b. Slide the battery box out from the chassis.

c. Remove the nuts and washers securing the lid to the battery box, and remove the lid.

d. Remove the bridging cable which interconnects the batteries.

e. Disconnect the negative and positive terminals respectively. Insulate each terminal as it is disconnected to prevent possible sparking.

f. Remove the battery retaining frame, then remove the batteries.

g. Install the new batteries and secure in position with the retaining frame.

h. Connect the positive and negative terminals respectively, then

connect the battery bridging cable between the remaining positive and negative terminals.

i. Position the lid on the battery box and secure in position with the washers and nuts.

j. Slide the battery box towards the chassis and lock the sliding frame in position.

CHAPTER 3

OPERATOR SERVICING

SECTION 1 — SERVICING

SECTION 2 — LUBRICATION

SECTION 1
SERVICING

First parade servicing

301. Before moving off with a loaded or unloaded vehicle, carry out the inspections, checks and tests as laid down in this section. Inspect for damage, security and serviceability.

302. Check the wheels and tyres for the following:

a. Loose wheel nuts.
b. Correct tyre pressure (see page 78).
c. Cuts, weak spots, uneven wear, exposed cords, or clogged tyres.

303. Check the following fittings:

a. All cabin and body fittings.
b. Spare wheel.
c. Stowage space, doors and lids.
d. Windscreen, driving mirrors, door windows, hinges, catches and latches for security.
e. All light lenses, driving mirrors and windscreens and clean as necessary.
f. Tow hook, coupling and security.

304. Check the stowed items as follows:

a. Completeness of equipment and correct stowage.
b. For loose items in cabin or rear section.
c. De-ditching tools.
d. Fire extinguishers, fully charged and correctly stowed.

305. Check the fuel, lubricants and coolant as follows:

a. Fuel level in tank. Replenish as necessary.
b. Check jerrican and refill if necessary.
c. Engine oil level using dipstick. Top-up as necessary.
d. Coolant level in radiator expansion tank. Top-up if necessary.
e. Water can in stowage. Top-up if necessary.
f. For fuel, lubricant and coolant leaks. Examine major assemblies and the ground below the vehicle for evidence.

Start the vehicle

306. Start the vehicle as detailed in Chapter 2 Section 2 and check the following:

a.	Voltmeter	Any irregular readings indicates battery or charging system requires checking.
b.	Horn	Check operation of the horn.
c.	Lights	Check operation of all lights.
d.	Windshield wipers/washers	Check operation. Add water, if needed.
e.	Parking brake	Check release, holding ability and application.
f.	Clutch pedal	Check for free travel.
g.	Seat adjustment	Ensure that seat is correctly adjusted.

Electrical

307. Check the following:

a.	Battery	Check electrolyte level — fill to 10 mm above plates. Check that the terminals are clean and tight.
b.	Lights	Switch off all lights not required.

Moving off and running

308. Check the following:

a. Load — make a final check of the security of load and lashings, if applicable.

b. Moving off — Release the parking brake. DO NOT move off if the parking brake warning light remains illuminated. Check correct operation of steering and brakes.

c. Keep a running check on all instruments.

d. Check the fuel level, coolant temperature, warning lights, charging rate and speedometer at intervals.

Halts on the march

309. At halts on the march check that:

a. The cargo and lashings are secure, if applicable.

b. No tyre is soft, punctured or overheated.

c. Wheel hubs or brake drums are not overheated.

d. There are no oil, fuel or coolant leaks.

310. At halts or after approximately four hours running:

a. Check tyre pressures. If low, inflate. (If high, check later when tyres are cold, before deflating).

b. Ensure that all wheel nuts are secure.

c. Test all lights (especially if there is a possibility that they will be required).

d. Check generally for loose bolts or fittings. Tighten as necessary.

e. Ensure security of stowed items.

f. Inspect for security and correct operation any parts on which recent repairs or adjustments have been carried out.

Last parade servicing

311. Carry out the following:

a. Clean the vehicle.

b. Carry out "halts on the march" servicing.

c. Draw fuel and lubricants, as required and top-up fuel tanks, engine oil and radiator expansion tank coolant. If operating under very dusty conditions, the air cleaner should be removed and cleaned.

d. If vehicle has been subjected to deep water crossings during daily exercise, the oil in the swivel pin housings, front, intermediate and rear axles, transmission and transfer case, should be checked for signs of water contamination. If any traces of water are found, the oil should be drained and replenished with correct type as soon as possible.

e. Check radiator core for insects, mud, etc., clean as required with compressed air or water.

f. Complete documentation.

g. Close the doors and windows.

Opening bonnet for servicing access

312. To open the bonnet, proceed as follows:

a. Pull the bonnet release handle.

b. Release the safety catch at the front of the bonnet.

c. Lift the bonnet up and pull the support stay forward.

WARNING

ENSURE THAT THE BONNET SUPPORT STAY IS PROPERLY LOCKED BEFORE RELEASING THE BONNET.

313. To close the bonnet, proceed as follows:

a. Hold the bonnet open and push the support stay back.

b. Gently lower the bonnet then push the bonnet down firmly to lock in position. Do not allow the bonnet to drop from the open position.

Radiator coolant

314. Normal cooling system replenishment is via the expansion tank. However, in the event of excessive coolant loss or drainage, the following radiator filling procedure is to be adopted:

a. Remove the expansion tank pressure cap and move the heater controls to the highest temperature position.

b. Remove the brass filler plug from the thermostat housing (see Fig. 3-1).

c. Using coolant with a mixture concentration of 5% Alfloc 2001, top-up the system through the filler hole, then replace the plug.

d. With the pressure cap removed, run the engine for a minimum of two minutes.

e. Stop the engine and remove the plug from the thermostat housing. Top-up as required, then install and tighten the plug securely.

f. Fill the expansion tank to the correct level and install the cap.

g. Run the engine and check for leaks.

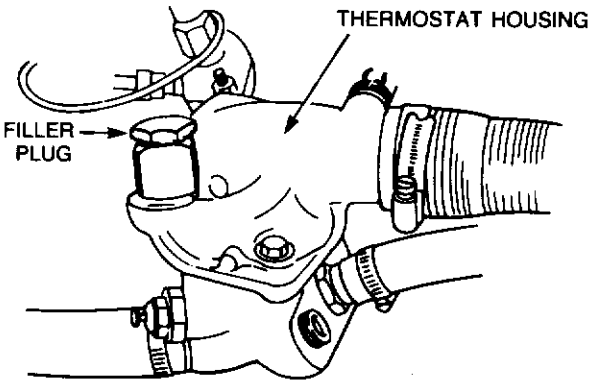

Figure 3-1 Thermostat housing

Bleeding the fuel system

315. To bleed the fuel system, proceed as follows:

a. Loosen the screw cap on the transfer pump and operate the primer.

b. Loosen the overflow valve on the fuel filter adapter (see Fig. 3-2) and continue operating the primer until a solid stream of fuel flows from the valve.

c. Tighten the overflow valve and continue operating the primer. Loosen the air bleed screw on the fuel injection pump and continue operating the primer until a solid stream of fuel flows from the air bleed screw. Tighten the air bleed screw.

d. Secure the primer screw cap and start the engine. Ensure that the engine runs smoothly.

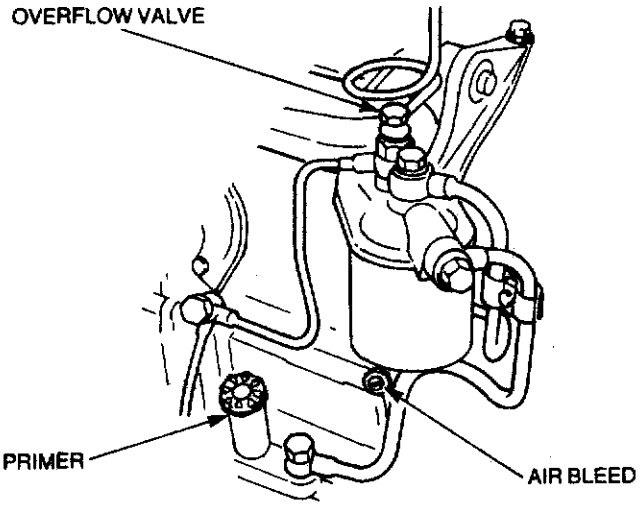

Figure 3-2 Bleeding the fuel system

316. Periodical maintenance

a. To ensure that the vehicle is correctly maintained and prepared for operational tasks, it is necessary to carry out regular maintenance.

b. Daily and Fortnightly Servicing in accordance with Tables 3-1 and 3-2 is to be carried out by operators and is the responsibility of owner units.

c. Initial service should be carried out after the vehicle has been in service for a period of three months, or having travelled 1600 km, whichever occurs first. The service is the responsibility of RA Limited and will be carried out by arrangement with any Land Rover franchised Dealer at no charge to the Army, except for the cost of replacement

lubricants and filters. Alternatively this service can be carried out by an Army tradesman in accordance with Table 3-3, should it not be convenient for the vehicle to be returned to the authorised Rover Dealer at that time.

d. Minor and Major Servicing is to be carried out by RAEME with assistance from operators working under RAEME supervision in accordance with Tables 3-4 and 3-5. The vehicle is to be serviced in accordance with the intervals in EMEI Veh G 209.

(1) **Minor Service.** Every twelve months or 10 000 km of operation (except during warranty when six months interval used).

(2) **Major Service.** Every twenty four months or 20 000 km of operation, whichever occurs first (except during warranty when 12 months interval used).

Special requirements

317. During the early life of a vehicle the working parts settle down, with the result that various clearances and adjustments need to be corrected. Operators should report problems for rectification at the earliest opportunity.

318. The Initial Service includes a warranty inspection which must be reported to Rover Australia in accordance with EMEI VEHICLE A 119-22.

319. Vehicles are to be inspected by RAEME Technical Support personnel prior to expiry date of the warranty. Refer EMEI VEH A 119-22.

Table 3-1 Daily tasks

The following operations are to be performed by the driver:

1. Check engine oil level, top-up if necessary.
2. Check coolant level, top-up if necessary.
3. Check power steering reservoir, top-up if necessary.
4. Check tyres and wheels. Inflate tyres if necessary, inspect wheel nuts for evidence of looseness.
5. Check for fuel, oil and coolant leaks.
6. Check fuel supply and operation of fuel gauge.
7. Check voltmeter readings. With ignition switch on and engine off, reading indicates battery condition. With engine running, reading indicates condition of charging system.
8. Check operation of horn.

Table 3-1 Daily tasks (cont'd)

9. Check all lights for correct operation and report any defects.
10. Check operation of footbrake, parking brake and clutch.
11. Check coolant temperature gauge reading.
12. Check operation of windscreen wipers and washers, top-up washer reservoir if required.
13. Check air cleaner restriction gauge reading. If locked in "red" position, the air cleaner elements must be changed. Under dusty conditions, remove and clean elements.
14. Check seats and seat belts for operation and security.
15. Check driving mirrors, door windows, catches and latches.

Table 3-2 Fortnightly tasks

The following operations are to be performed by the driver:

1. Check condition and tension of fanbelts. Approx. 10-15 mm deflection on longest span using moderate thumb pressure for both alternator belts .
2. Check battery electrolyte levels (10 mm above plates), top-up if necessary, examine terminals for cleanliness and security. Check for leaks and security, clean outside of batteries if required.
3. Check radiator external condition for restriction, clean if required.
4. If operating in dusty conditions, remove air cleaner elements and clean.
5. Check operation of hand throttle and stop control.
6. Check operation of differential lock control.
7. Check operation of transfer case control.
8. Check condition of wheel rims, tyres and valve stems.
9. Check wheel nuts are torqued correctly.
10. Check operation and security of spare wheel carrier.
11. Check security of fuel tanks and lines.
12. Check fuel, oil and coolant systems for leaks.
13. Drain water from sedimenters.

Tyre pressure (cold)

Highway:	
front	350 kPa (50 psi)
intermediate	350 kPa (50 psi)
rear	350 kPa (50 psi)
Cross-country:	
front	275 kPa (40 psi)
intermediate	275 kPa (40 psi)
rear	275 kPa (40 psi)
Sand:	
front	225 kPa (33 psi)
intermediate	225 kPa (33 psi)
rear	225 kPa (33 psi)

320. Table 3-3 details the servicing instructions for this vehicle. However, refer to EMEI VEH G 209 for the complete servicing instructions.

Table 3-3 Servicing Instructions (Extract from EMEI Vehicle G 209)

Designation	Initial 3 Mths/ 1600km	Minor 6 Mths/ 10 000km	Major 12 Mths/ 20 000km	Alt Major 24 Mths/ 40 000km	Capacity (litres)	Lubricant
DRIVER TASKS (under RAEME supervision)						
Engine oil	D	D	D	D	8.5	OMD-115
Engine oil filters	R	R	R	R		
Fuel filter	R	R	R	R		
Engine breather filter	C	C	C	C		
Water pump (if nipple fitted)	L	L	L	L		XG-274
Air cleaner	C	R	R			
Air cleaner dust vacuator valve	C	C	C	C		
Radiator coolant	K	K	D	D	12.5	Water and inhibitor
Fuel transfer pump strainer	C	C	C	C		
Windscreen washer bottle	K	K	K	K		
Brake fluid reservoir	K	K	-	-		OX(AUST)8
Clutch fluid reservoir	K	K	-	-		OX(AUST)8
Power steering system	K	K	D	D	1.25	OX-46
Bonnet locks and hinges	L	L	L	L		OMD-115
Heater intake dump valve	C	C	C	C		
Accelerator control linkage and pedal pivot	L	L	L	L		OMD-115
Hinges, catches and latches	L	L	L	L		OMD-115
Fan belt jockey pulley bearing	L	L	L	L		XG-274
Battery electrolyte level (10mm above plates),						

Table 3-3 Servicing Instructions (Cont'd)

Designation	Initial 3 Mths/ 1600km	Minor 6 Mths/ 10 000km	Major 12 Mths/ 20 000km	Alt Major 24 Mths/ 40 000km	Capacity (litres)	Lubricant
security and cleanliness of terminals	KI	KI	KI	KI		
Seat slides	L	L	L	L		OMD-115
Driving mirrors and window glasses	CI	CI	CI	CI		
Tyres (inflate if necessary including spare)	K	K	K	K		
Wheel nut security	Y	Y	Y	Y		
Fuel sedimenters	C	C	C	C		
Winch gearbox	K	K	K	D	2.1	OEP-220
Front axle	D	K	K	D	1.7	OEP-220
Intermediate axle	D	K	K	D	2.3	OEP-220
Swivel pin housings	D	K	K	D	0.35 ea	OEP-220
Transmission	D	K	K	D	2.7	OMD-115
Transfer case (with PTO)	D	K	K	D	3.2 (5.8)	OMD-115
Rear axle	D	K	K	D	2.7	OEP-220
Park brake and PTO linkage	L	L	L	L		XG-274
Axle and transmission breathers	C	C	C	C		
Axle rebound cables	I	I	I	I		
Propeller shafts, support bearings, sliding and universal joints	L	L	L	L		XG-274
Propeller shaft bolts	Y	Y	Y	Y		
Winch fairleads and rollers	L	L	L	L		OMD-115
Winch propeller shaft and support bearings	L	L	L	L		XG-274

Table 3-3 Servicing Instructions (Cont'd)

Designation	Initial 3 Mths/ 1600km	Minor 6 Mths/ 10 000km	Major 12 Mths/ 20 000km	Alt Major 24 Mths/ 40 000km	Capacity (litres)	Lubricant
Winch dog-clutch	L	L	L	L		XG-274
Winch rope	L	L	L	L		ZX-8
Spare wheel carrier operation	I	I	I	I		
Pintle hook	L	L	L	L		XG-274
Vehicle cleanliness (as directed by supervising tradesman)	C	C	C	C		
Module to chassis mounting bolts	Y	Y	Y	Y		
Step and platform mounting bolts	Y	Y	Y	Y		
Rear door mount latches and catches	YL	YL	YL	YL		OMD-115
Operation of module 240 volt electrical components (air conditioner motor, fluorescent lighting, battery charger and fan assisted heater)	I	I	I	I		
Operation of bench drawers	IL	IL	IL	IL		XG-274
Report defects						
VEHICLE MECHANIC TASKS						
Air compressor operation (if fitted)	I	I	I	I		
Fuel injection pump and lines	I	I	I	I		
Engine idle	A	A	A	A		
Fanbelts	IA	IA	IA	IA		

Table 3-3 Servicing Instructions (Cont'd)

Designation	Initial 3 Mths/ 1600km	Minor 6 Mths/ 10 000km	Major 12 Mths/ 20 000km	Alt Major 24 Mths/ 40 000km	Capacity (litres)	Lubricant
Fanbelt jockey pulley (if fitted)	IA	IA	IA	IA		
Alternator mounting bolts	Y	Y	Y	Y		
Intake and exhaust manifold bolts	Y	Y	Y	Y		
Turbocharger bolts	Y	Y	Y	Y		
Engine mounting and earth strap	I	I	I	I		
Valve clearances	A	-	A	A		
Fuel injectors	-	-	-	I		
Engine compression	-	-	-	I		
Glow plugs electrical circuit	I	-	I	I		
Engine stop control and hand throttle connection and operation	I	I	I	I		
Water pump condition	I	I	I	I		
Radiator and hose condition	I	I	I	I		
Flywheel housing	DI	DI	DI	DI		
Oil, coolant and fuel leaks	I	I	I	I		
Exhaust system leaks, damage and security	I	I	I	I		
Windscreen wipers, wiper blades and washers	I	I	I	I		
Windscreen and side windows, glass and seals	I	I	I	I		
Brake, fuel and clutch pipes, chafing, leaks, or corrosion	I	I	I	I		
Brake master cylinder leaks	I	I	I	I		

Table 3-3 Servicing Instructions (Cont'd)

Designation	Initial 3 Mths/ 1600km	Minor 6 Mths/ 10 000km	Major 12 Mths/ 20 000km	Alt Major 24 Mths/ 40 000km	Capacity (litres)	Lubricant
Brake servo filter	-	-	-	R		
Brake servo hose condition and operation	I	I	I	I		
Front and rear hub bearings	A	A	A	ILA		XG-274
Front and rear brake pads for wear, calipers for leaks and condition of discs	I	I	I	I		
Brake hydraulic system	-	-	DB	DB		OX(AUST)8
Clutch master and slave cylinder leaks	I	I	I	I		
Clutch hydraulic system	-	-	DB	DB		OX(AUST)8
Transmission mountings and earth strap	I	I	I	I		
Propeller universal joint and sliding joint	I	I	I	I		
Winch propeller shaft and support bearing	I	I	I	I		
Park brake, PTO linkage and cable	IA	IA	IA	IA		
Steering box adjustment and security	IA	IA	IA	IA		
Steering linkages and tie-rod ends	I	I	I	I		
Steering damper	I	I	I	I		
Steering protection plate for damage and security	I	I	I	I		

Table 3-3 Servicing Instructions (Cont'd)

Designation	Initial 3 Mths/ 1600km	Minor 6 Mths/ 10 000km	Major 12 Mths/ 20 000km	Alt Major 24 Mths/ 40 000km	Capacity (litres)	Lubricant
Shock absorbers and springs	I	I	I	I		
Front radius arm bushes and bolts	I	I	I	I		
Panhard bushes and bolts	I	I	I	I		
Swivel pin bushes	I	I	I	I		
Rear spring shackles and equalisers	I	I	I	I		
Tyre wear and rim damage	I	I	I	I		
Wheel alignment	I	I	I	I		
Panel damage	I	I	I	I		
Canopy and bows	I	I	I	I		
Seat belts, mountings and inertia reel operation	I	I	I	I		
Bonnet lock operation and adjustment	IA	IA	IA	IA		
Bonnet hinges	I	I	I	I		
Headlight alignment	IA	IA	IA	IA		
Operation of lights, gauges, warning lights and horn	I	I	I	I		
Operation of foot brake, hand brake and clutch	I	I	I	I		
Winch operation	I	I	I	I		
NATO plug	I	I	I	I		
Pintle hook	I	I	I	I		

Table 3-3 Servicing Instructions (Cont'd)

Designation	Initial 3 Mths/ 1600km	Minor 6 Mths/ 10 000km	Major 12 Mths/ 20 000km	Alt Major 24 Mths/ 40 000km	Capacity (litres)	Lubricant
Air Conditioning (carried out by Refrigeration Mechanic)						
Receiver drier	-	-	R	R		
Air conditioner suction and discharge pressure	-	-	K	K		Freon R12
Air conditioner oil level	-	-	K	K		OM-70
Evacuate air conditioner system	-	-	D	D		Freon R12
Air conditioner security	Y	Y	Y	Y		
Compressor mounting and clutch bolts	Y	Y	Y	Y		
Condensor core	C	C	C	C		
Refrigerant hoses	I	I	I	I		
Drain tubes for kinks or restriction	I	I	I	I		
Test air conditioner operation	I	I	I	I		

LEGEND

A - Adjust
B - Bleed
C - Clean
D - Drain and Refill
I - Inspect
K - Check/Top-up
L - Lubricate
R - Replace
Y - Tighten

SECTION 2
LUBRICATION

321. Table 3-4 details the lubricants required for vehicle servicing. However, refer to EMEI VEH G 209 for the approved list of lubricants and servicing instructions.

Table 3-4 List of Lubricants

Equipment	Lubricant	Capacity (litres)
Engine (including filters)	OMD-115	8.5
Transmission	OMD-115	2.7
Transfer Case (without PTO)	OMD-115	3.2
Front Axle	OEP-220	1.7
Intermediate Axle	OEP-220	2.3
Rear Axle	OEP-220	2.7
Swivel Pin Housings	OEP-220	0.35 (each)
Brake Master Cylinder	OX (Aust) 8	Fill to level
Clutch Master Cylinder	OX (Aust) 8	Fill to level
Steering Box (including reservoir)	OX 46	1.25
Chassis Lubrication	XG-274	As required
Wheel Bearings	XG-274	As required
Fanbelt Jockey Pulley	XG-274	As required
Air conditioning	Freon	As required

322. Fig. 3-3 illustrates the location of various lubrication and oil drainage/ refill points around the vehicle.

NOTE

Run the engine or drive the vehicle as appropriate to warm oils before draining.

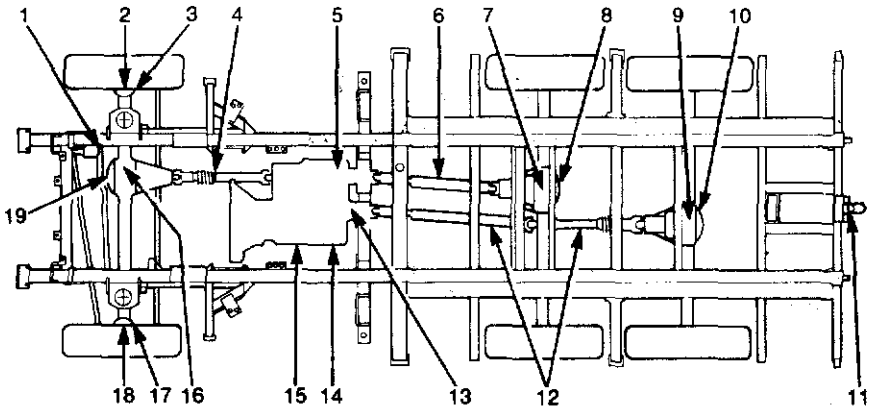

1. Power steering reservoir
2. Right hand swivel pin housing drain plug
3. Right hand swivel pin housing fill plug
4. Front propeller shaft grease nipples
5. Transfer case drain plug
6. Intermediate propeller shaft grease nipples
7. Intermediate axle drain plug
8. Intermediate axle fill plug
9. Rear axle drain plug
10. Rear axle fill plug
11. Pintle
12. Rear propeller shaft
13. Transfer case fill plug
14. Transmission fill plug
15. Transmission drain plug
16. Front axle drain plug
17. Left hand swivel pin housing fill plug
18. Left hand swivel pin housing drain plug
19. Front axle fill plug

Figure 3-3 Lubrication and oil drain/refill points

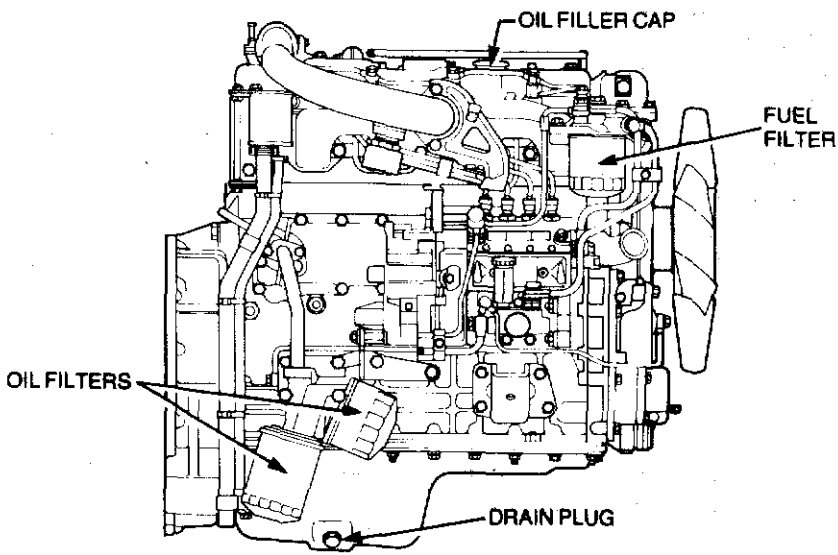

Figure 3-4 Engine — right hand side

Engine oil and oil filter change procedure

323. Run the engine until the engine coolant reaches normal operating temperature then shut down the engine. Remove the engine oil pan drain plug (see Fig. 3-4) and drain the oil into a suitable receptacle before the engine cools. Fit a new sealing washer on the drain plug and install the drain plug.

324. Unscrew each oil filter cartridge counter-clockwise, using a suitable oil filter removing tool if necessary (see Fig. 3-5). Apply a film of clean engine oil on the rubber seal of each new filter cartridge and install each filter. After the filter seal contacts the adapter, tighten the filter a further half a turn by hand only.

325. Fill the engine with the correct quantity of the recommended lubricant. Do not overfill. Check the level on the dipstick, then run the engine for about five minutes. Stop the engine and check the oil level on the dipstick. Add additional oil as required and check for leaks at the filters.

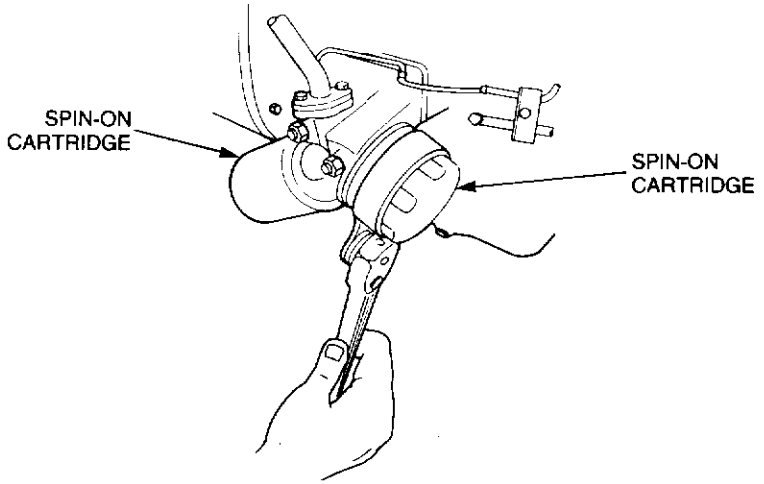

Figure 3-5 Oil filter removal

Transmission

326. The transmission drain plug is located on the left hand side of the transmission. Behind the drain plug is a filter which should be washed in clean fuel each time the transmission oil is drained. Allow the filter to dry completely before installing. Remove and wash the magnetic plug and remove all metallic particles. Install the plug.

327. The transmission fill plug is adjacent to the drain plug (see Fig. 3-6). Fill the transmission with the recommended lubricant to the bottom of the fill hole.

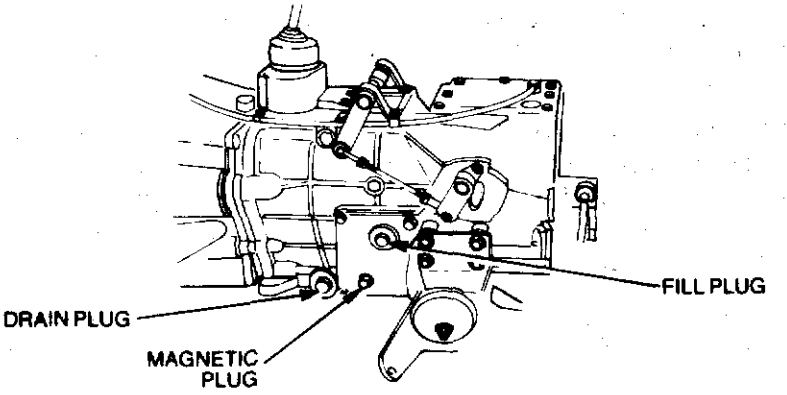

Figure 3-6 Transmission drain and fill plugs

Transfer case

328. The transfer case drain plug is located in the bottom of the PTO housing (see Fig. 3-7). The plug should be cleaned each time the transfer case oil is drained. Use a new sealing washer on installation.

329. The transfer case fill plug is located on the rear of the housing (see Fig. 3-7). Fill the transfer case with the recommended lubricant to the bottom of the fill hole.

330. Ensure that the transfer case breather is not restricted.

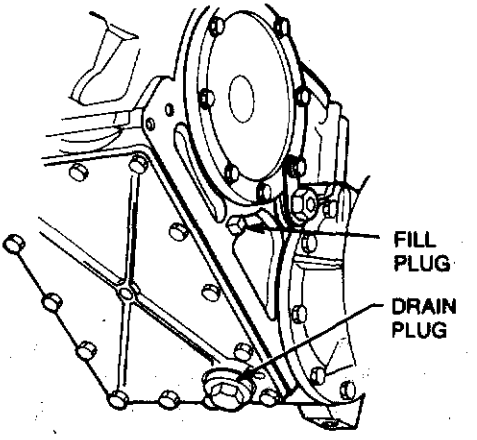

Figure 3-7 Transfer case drain and fill plugs

Intermediate axle

331. The drain plug is located on the bottom of the housing, while the fill plug is located on the rear cover (see Fig. 3-8). Fill the differential with the recommended lubricant to the bottom of the fill hole.

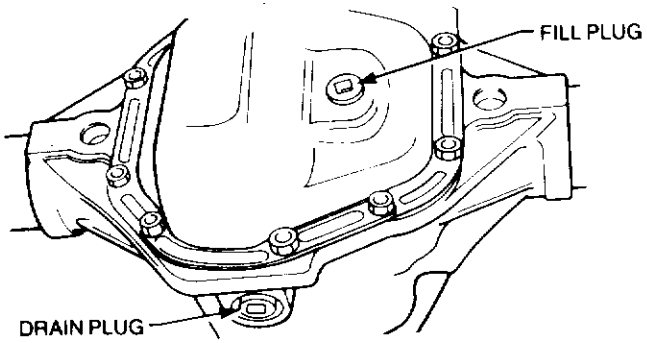

Figure 3-8 Intermediate axle drain and fill plugs

Rear axle

332. The drain plug is located on the bottom of the housing, while the fill plug is located on the rear cover (see Fig. 3-9). Fill the differential with the recommended lubricant to the bottom of the fill hole.

333. Ensure that the rear axle breather is not restricted.

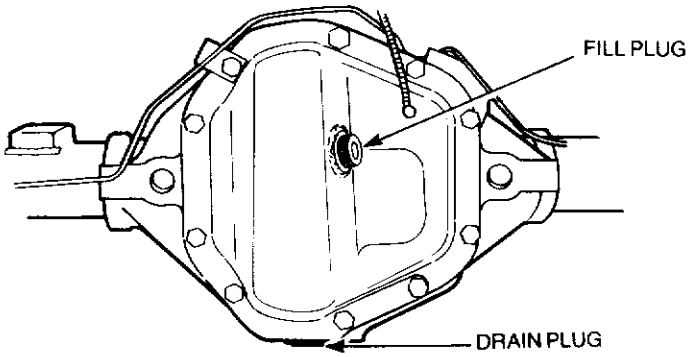

Figure 3-9 Rear axle drain and fill plugs

Front axle

334. The drain plug is located on the bottom of the housing, while the fill plug is located on the front of the housing. Fill the differential with the recommended lubricant to the bottom of the fill hole.

335. Ensure that the front axle breather is not restricted.

Steering reservoir/box

336. The steering reservoir/box are filled by removing the cap on top of the reservoir and filling the reservoir to the prescribed mark on the dipstick. No drain plug is fitted.

Swivel pin housings

337. The location of the drain plug and the fill plug is shown in Fig. 3-10. To drain the swivel pin housing, remove both the fill and drain plugs and drain the oil into a suitable receptacle. Fill the swivel pin housing with the recommended lubricant to the bottom of the fill hole.

Propeller shafts

338. The propeller shafts and universal joints are each fitted with a grease nipple (see Fig. 3-3 items 4, 6 and 12) and lubrication is required each service.

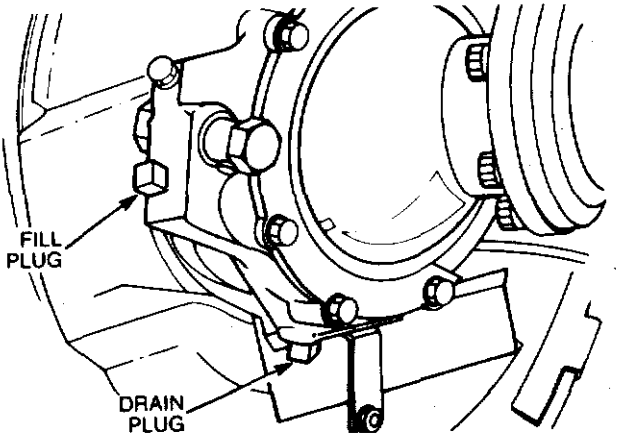

Figure 3-10 Swivel pin housing drain and fill plugs

Towing pintle

339. The towing pintle is fitted with one grease nipple and lubrication is required each service.

Fuel filter

340. Place a suitable container beneath the fuel filter, then, using a suitable filter-removing tool, remove the filter (see Fig. 3-11). Remove the filter rubber seal from the cover. Smear clean fuel on the rubber seal of a new filter and install the new filter on the cover. Tighten the filter by hand

until the rubber seal touches the cover face, then tighten a further half a turn. Bleed the fuel system as detailed in Chapter 3 Section 1.

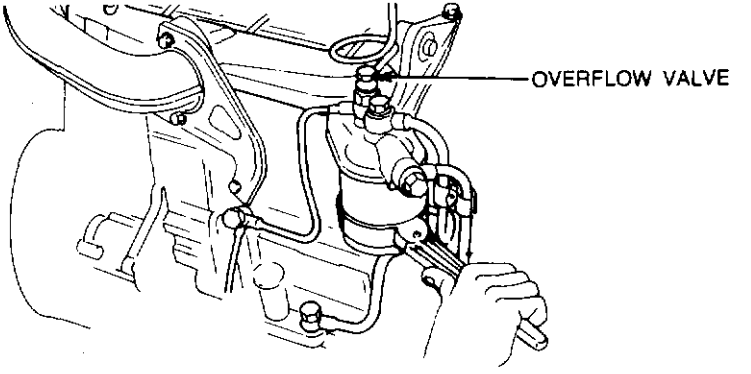

Figure 3-11 Fuel filter

Fuel sedimenters

341. Two fuel sedimenters, are located on the cabin rear crossmember forward of the rear spring mounting. A drain plug is fitted to allow the contents to be drained (see Fig. 3-12). Bleed the fuel system as detailed in Chapter 3 Section 1.

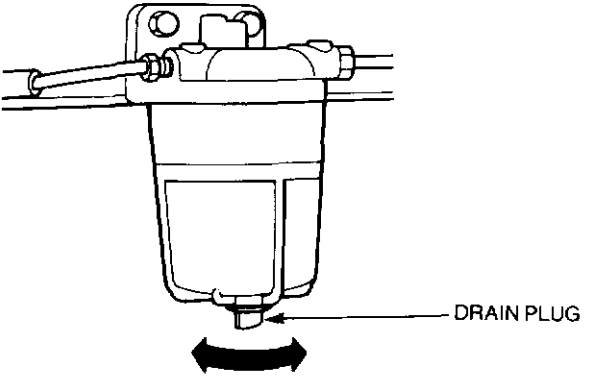

Figure 3-12 Fuel sedimenters

Air cleaner

342. The air cleaner elements will require cleaning or replacement when the signal indicator shows red. To clean or replace the air cleaner elements, proceed as follows:

a. Remove the hose clamps securing the air inlet and outlet hoses to the air cleaner housing (see Fig. 3-13) then remove the two wing nuts from the clamp bolts. Carefully lift the air cleaner out of the mounting brackets.

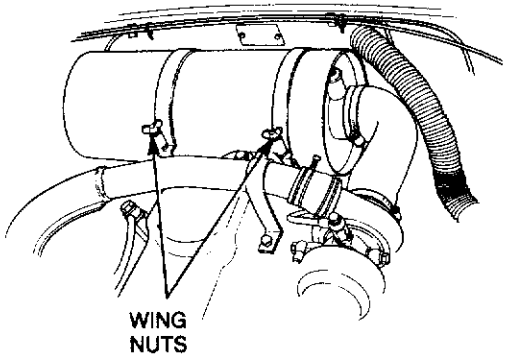

Figure 3-13 Air cleaner removal

b. Remove the wing nuts securing the end cover and elements.

c. Wipe out the air cleaner housing with a clean damp cloth. Remove and clean the dust valve (see Fig. 3-14).

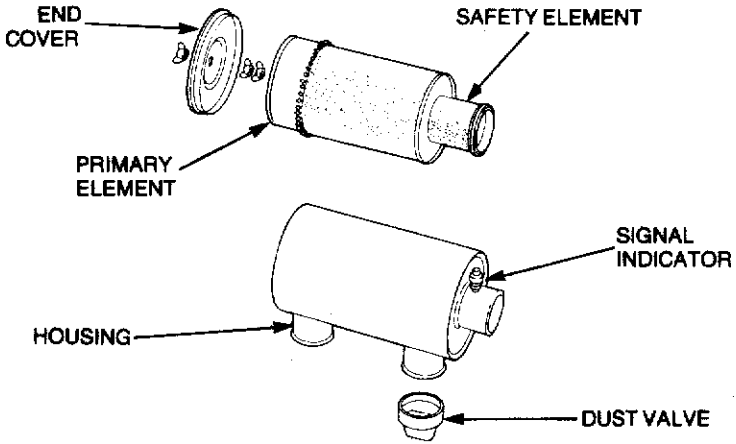

Figure 3-14 Air cleaner elements

d. Clean or discard the primary element. If the element is to be cleaned, this can be achieved with compressed air or washing with a non-sudsing general purpose detergent (see EMEI

VEH A 591-1). If washing, ensure that the element is dry before installing. Do not clean the safety element.

e. Install and secure the new or cleaned element, then secure the end cover.

f. Install the air cleaner assembly and connect the air inlet and outlet hoses. Secure the hose clamps and tighten the wing nuts.

g. Depress the reset button on the signal indicator to enable the red signal to be released.

Brake reservoir

343. Check the fluid level in the brake reservoir against the level marked on the reservoir. If necessary, remove the reservoir top and top-up with clean brake fluid OX (Aust) 8. See Fig. 3-15 for reservoir location.

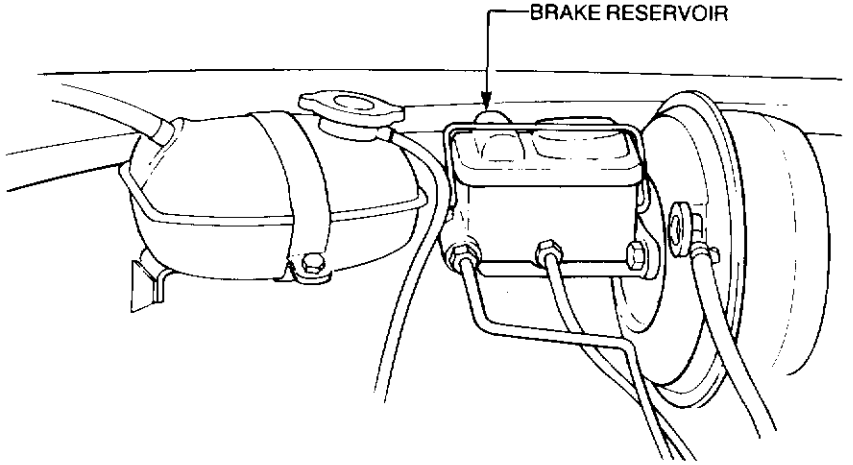

Figure 3-15 Brake reservoir

Clutch reservoir

344. Remove the reservoir cap and check that the fluid level in the clutch reservoir is up to the bottom of the filler neck. If necessary, top-up with clean brake fluid OX (Aust) 8. See Fig. 3-16 for reservoir location.

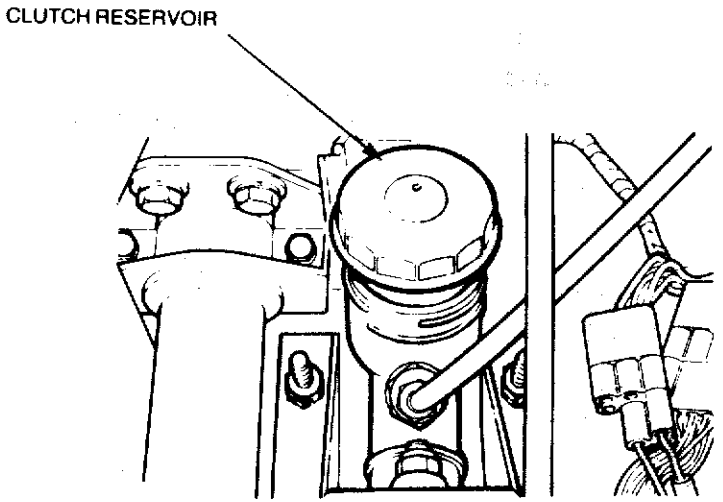

Figure 3-16 Clutch reservoir

Fanbelt jockey pulley

345. The 24 volt alternator fanbelt jockey pulley is fitted with one grease nipple and requires lubrication at each service (see Fig. 3-17).

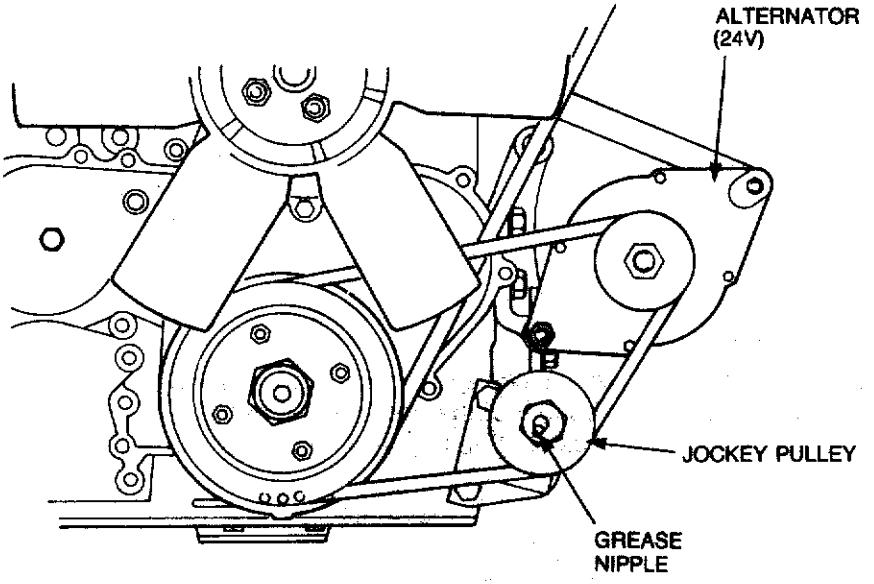

Figure 3-17 Jockey pulley lubrication

CHAPTER 4

COMSEC MODULE

SECTION 1 — EQUIPMENT DESCRIPTION

SECTION 2 — EQUIPMENT OPERATING INSTRUCTIONS

SECTION 1
EQUIPMENT DESCRIPTION

Introduction

401. The Comsec module is a self-contained unit which is mounted on the chassis of the Truck, Cargo, Light, MC2 in place of the cargo tray. The module is of a steel frame fibreglass sandwich construction which can be mounted on the chassis of the Truck, Cargo, Light, MC2 by two tradesmen in a fully equipped workshop in three days.

Operational and logistic concepts

402. This module provides two environmentally controlled work stations for two tradesmen to carry out repairs up to unit and field level under field conditions. The module will be outfitted by the user unit (with the specialist repair equipment held by the unit) in order to carry out its required role.

Ventilation and heating systems

403. A 240 volt variable speed fan assisted heater is mounted in the footwell at the front of the module. Four roof mounted vents are fitted to allow for air distribution within the module.

Lighting, electrical systems and controls

404. Ceiling lights

The main lighting utilizes eight 240 volt fluorescent tubes and is controlled by a switch secured to the roof adjacent to the rear door (see Fig. 4-1).

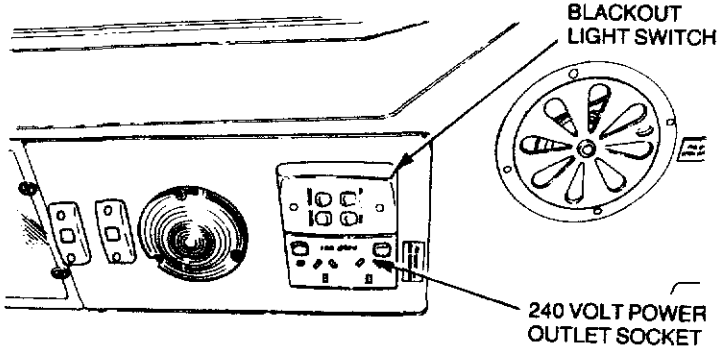

Figure 4-1 Ceiling light switches

405. Blackout function — module

The blackout function is controlled by a red rocker switch, located on the roof mounted switch panel, and a roof mounted roller switch, operated in

combination with the opening and closing of the rear door. With the blackout switch on and the rear door closed, normal white interior lighting is utilised. If the rear door is opened white lighting is extinguished and blackout lighting is illuminated automatically.

406. Additional lights — 24 volt

Additional lighting is available utilizing the vehicles 24 volt electrical system. The four lights, which are fitted with an on/off switch, are positioned above the work bench on the left hand side and above the platform on the right hand side of the module (see Fig. 4-2).

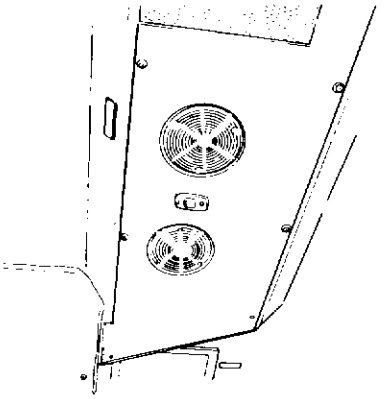

Figure 4-2 Module 24 volt lighting

407. High level reversing lights

Two clear lensed exterior lights are mounted on the door (see Fig. 4-3) and are controlled by the vehicles 12 volt lighting circuit as reversing lights.

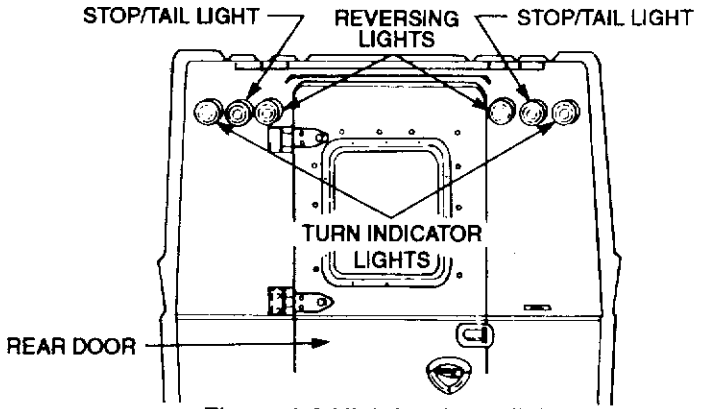

Figure 4-3 High level rear lights

408. High level indicator lights

Two amber lensed lights are mounted on the upper section of the door (see Fig. 4-3) and work in conjunction with the vehicles 12 volt lighting circuit to act as high level indicator lights.

409. High level stop and tail lights

Two red lensed lights are mounted on the upper section of the rear door (see Fig. 4-3), and work in conjunction with the vehicles 12 volt lighting circuit to act as high level stop and tail lights.

410. Fan assisted heater

The heater is located in the front right hand corner of the footwell (see Fig. 4-4), and incorporates a 3 position rotary switch for fan speed control, and a variable rotary switch for temperature control.

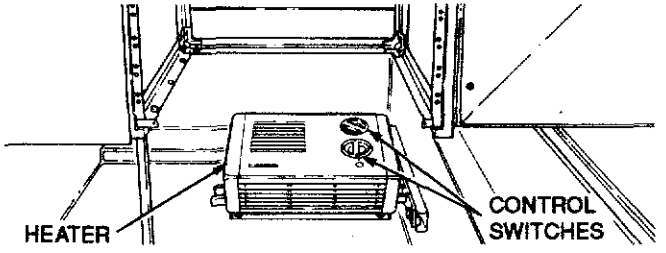

Figure 4-4 Fan assisted heater

411. Air conditioning

CAUTION

OPERATE AIR CONDITIONING FOR ONE HOUR PER MONTH.

The air conditioning evaporator, air distributor and slide controls are combined in one unit, which is located on the upper front wall inside the module (see Fig. 4-5). The slide controls on the front of the unit enable the degree of coolness and the amount of air flow through the air conditioning to be regulated, while the outlet vents can be adjusted to direct the air flow to various points of the module.

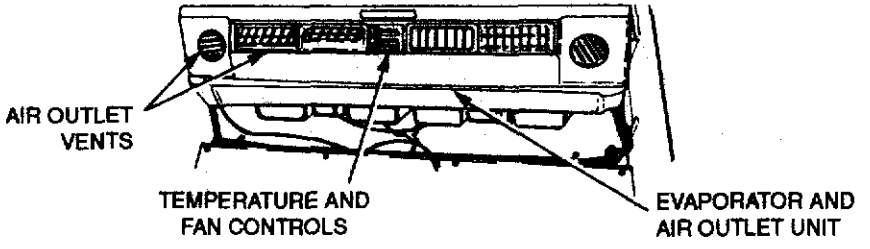

Figure 4-5 Air conditioning unit

412. Air conditioning compressor

The air conditioning compressor is located on the left hand side of the module above the auxiliary 24 volt battery storage rack (see Fig. 4-6). A 240 volt electric motor drives the compressor via a single Vee-belt. The system condenser is mounted as a separate unit on the centre front of the module roof.

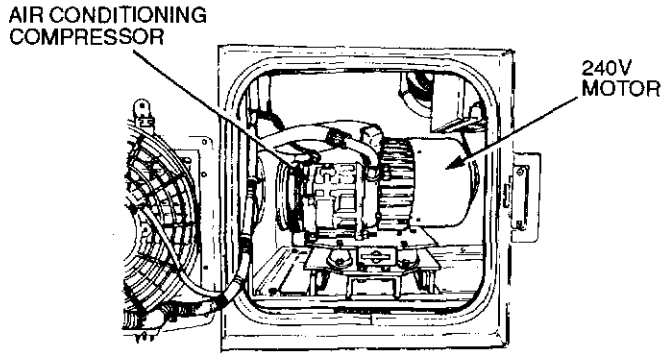

Figure 4-6 Air conditioning compressor

413. Power supply — 240 volt

Single and double switched power sockets are located in various positions on the module walls and ceiling. These 10 amp and 15 amp sockets supply mains voltage (240 volt) via an external source (generator or mains) to the power equipment being used.

414. Circuit breaker and power selection panel

The circuit breaker and power selection panel located on the inner front left hand corner of the module (see Fig. 4-7) houses circuit breakers to protect mains, 110 volt and 24 volt input and output voltages, power, heating and air conditioning controls and a voltmeter to indicate the charge state of the module batteries.

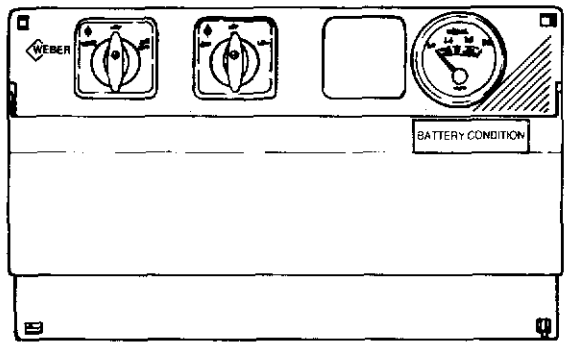

Figure 4-7 Circuit breaker and power selection panel

Comsec module fittings

415. Module construction

The module consists of welded galvabond steel tube framing which is covered by a fibreglass outer skin bonded to the frame. The inner panelling consists of two fibreglass shells that are positioned in the module and secured to the frame to form a fibreglass (urethane foam) sandwich.

416. Rear door

The rear door is manufactured from fibreglass, bonded to a galvabond frame. The door provides access to the module and has the following features:

a. A push in/out emergency exit/access window manufactured from clear plastic panel which can be covered internally by a heavy duty blackout curtain.

b. A rubber sealing ring door seal to guard against the ingress of dust or water.

c. Dual slam-latches are provided for the rear door, the lower latch is equipped with a spoon handle (internally) and a recessed dish handle on the outside of the door. These handles operate both latches simultaneously.

d. A security latch is fitted to the inside of the rear door below the slam latches, to prevent movement of the door handle. This is operated by a handle from inside the module and by the universal square shaft key (stowed at the front of the driver's seat) from the outside.

e. The microswitch is provided at the top of the door opening to sense whether the door is open or closed. This switch is connected to the logic circuit that controls the blackout lighting.

417. Exhaust vents

Two exhaust vents are located on the module roof and are semi-recessed into the rear of the roof panel. Air flow through the exhaust vents is controlled by rotating the shutters mounted in the ceiling below the exhaust vents. An exhaust fan is mounted in the ducting above each shutter. The fans are controlled by a common switch located forward of the right hand shutter. Two flap style air ventilators are fitted to the roof of the module adjacent to the lockers located above the front bench.

418. Rear step

Located centrally at the rear of the vehicle is a hinged step (see Fig. 4-8), which when swung down gives access to the module. When closed (in the up position) provides a weather seal to the footwell area of the module.

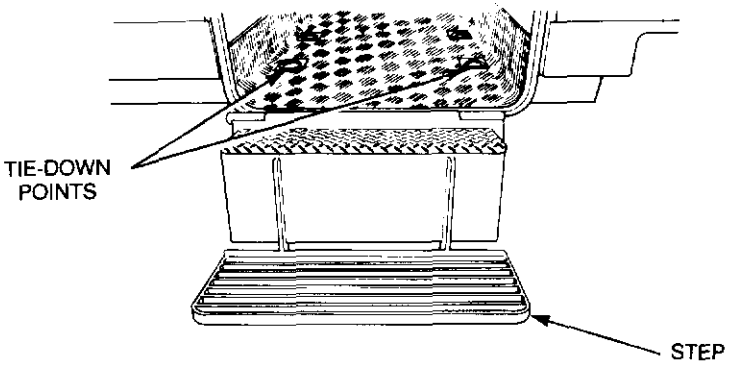

Figure 4-8 Rear step

419. Power inlet sockets

WARNING

THE VEHICLE IS TO BE EARTHED USING THE EXTERNAL EARTH SPIKE PRIOR TO EXTERNAL 415/ 240 VOLT POWER SOURCES BEING CONDUCTED TO THE VEHICLE.

NOTE

The 415 volt power inlet socket is fitted with a Panclimatic, Ruggedised, female, 5 pin, 45 Amp three phase power connector.

Located in the rear right hand corner of the module is a lockable flap which provides weather protection to the three inlet sockets (see Fig. 4-9). These sockets accept 240 volt single phase and 415 volt three phase power from mains or 2.5 kVA, 10 kVA or 15 kVA field generators.

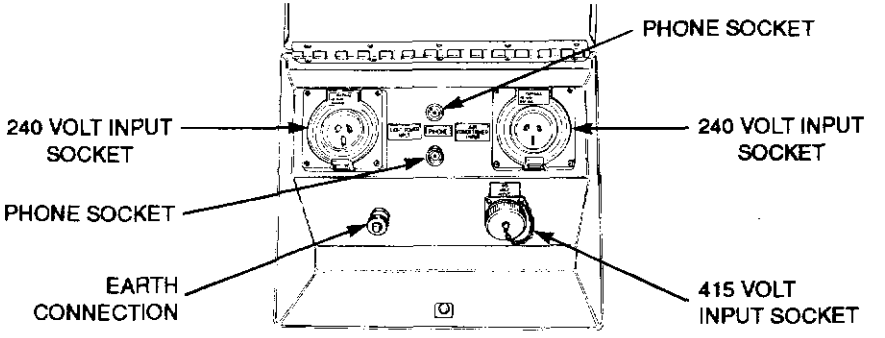

Figure 4-9 Power inlet sockets

420. Transformer — 240 volt to 24 volt

Located in the right hand front locker is a stepdown 240 volt to 24 volt transformer. This enables module electrical components such as air conditioner, magnetic clutch and exhaust fans to operate at 24 volts.

421. Transformer — 240 volt to 110 volt

Located in the left hand front locker is a stepdown 240 volt to 110 volt transformer. Supply of this voltage enables testing and repair of 110 volt equipment (see Fig. 4-10).

422. Battery charger

A wired in EDI Echinda battery charger is incorporated in the module and located n the left hand front locker. When the module is connected to a 240 volt power supply the battery charger is able to independently and simultaneously charge both of module's batteries (see Fig. 4-10).

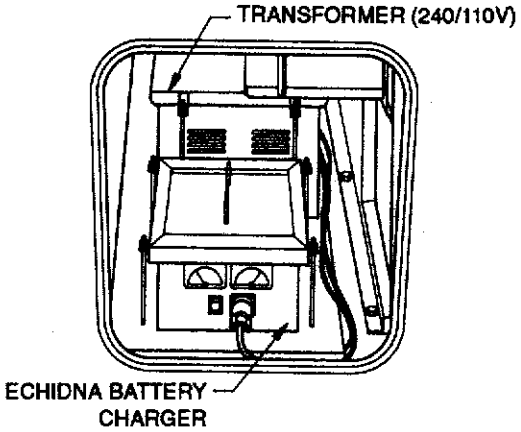

Figure 4-10 — Battery Charger

Module interior layout

423. Fire extinguisher

A 3.0 kg BCF fire extinguisher is secured, via a mounting bracket to the rear door (see Fig. 4-11).

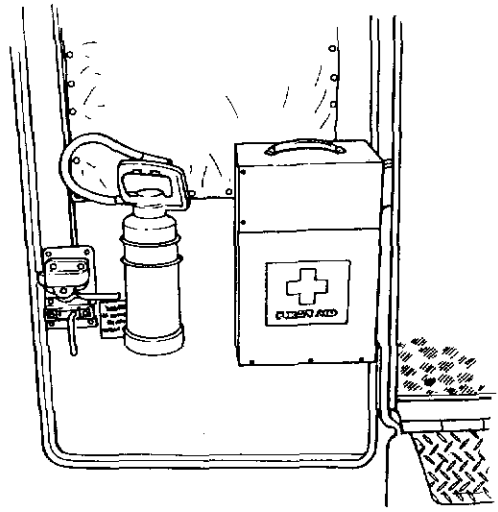

Figure 4-11 Fire extinguisher location and alternative position of first aid kit

424. Power outlet sockets — 240 volt 10 amp (Fig. 4-12 item 1)

Four 240 volt, 10 amp single phase power double outlet sockets are fitted to the module. Three sockets are located above the left hand bench and one socket above the front bench on the right hand side.

425. Power outlet sockets — 240 volt 15 amp (Fig. 4-11 item 2)

Two 240 volt 15 amp single phase single power outlet sockets are fitted to the module. One socket is located above the left hand bench and one above the front bench on the right hand side.

426. DC test terminal (Fig. 4-12 item 3)

Three 0 to 32 volt test terminals are installed above the benches in the module. Two are located on the left hand side wall, and one is located on the right hand side of the front wall.

427. 24 V DC outlet sockets (Fig. 4-12 item 4)

Two 24 volt DC outlet sockets are fitted above the left side bench of the module.

428. Fluorescent lighting (Fig. 4-12 item 5)

Four 240 volt fluorescent lights are incorporated in the module, with two lights positioned above the left hand side bench and one each above the front bench and the platform on the right hand side of the module.

429. Emergency lamps (Fig. 4-12 item 6)

Four 24 volt emergency lamps with switches are installed in the ceiling. One is located above the left hand side bench, two are located above the platform on the right hand side of the module, and one is located above the front bench.

430. Telephone binding posts (Fig. 4-12 item 7)

Two telephone binding posts are incorporated in the power input panel and are connected to two telephone binding posts mounted above the left hand side bench at the front of the module.

431. Air inlet vents (Fig. 4-12 item 8)

Two air inlet vents are fitted to the front section of the roof. When not in use the vents can be sealed against the ingress of dust or moisture.

432. Publication cabinets (Fig. 4-12 item 9)

Two cabinets are provided in the upper front corners of the module to provide storage for maintenance manuals.

433. Air conditioning unit (Fig. 4-12 item 10)

The air conditioning unit located at the upper front of the module comprises an evaporator, filter, fan, adjustable outlets and slide lever controls. The air conditioning system operates off a 240 volt supply.

434. Blackout light (Fig. 4-12 item 11)

Two blackout lights are located on the ceiling, one above the right hand platform and one above the left hand platform. The switch for the blackout lights is located on the ceiling on the right hand side rear of the module (see Fig. 4-1).

435. First aid kit (Fig. 4-12 item 12)

The first aid kit is stored in a cabinet secured to the top of the steel filing cabinet against the right hand wall of the module. An alternative position is a bracket mounting on the rear door (see Fig. 4-10).

436. Stowage frames (Fig. 4-12 item 13)

Two stowage frames are secured to the platforms on the right hand side of the module. The frames are used for the stowage of four bin packs.

437. Jerrican holders (Fig. 4-12 item 14)

Two jerrican holders are secured to the right hand platform for jerrican stowage.

438. Security filing cabinet (Fig. 4-12 item 15)

A two draw security filing cabinet is located at the right hand front of the module. Security is maintained by use of a combination lock.

439. Power outlet sockets — 110 volt 10 amp (Fig. 4-12 item 16)

Four 110 volt 10 amp single power outlet sockets are fitted to the module. Three sockets are located above the left hand bench and one above the

front bench on the right hand side. Three of the sockets are of the American configuration of two flat live pins and one round earth pin (coloured black) and one is of the Australian configuration of two round live pins and one flat earth pin (coloured white).

440. Tie-down rings (Fig. 4-12 item 17)

Six recessed tie-down rings are located in the floor for the purpose of securing tool boxes and/or loose equipment. Recessed tie-down rings are fitted to the bench tops. Sixteen are provided on each of the side and front benches, and eight webbing tie-down straps with ratchet mechanisms are provided.

441. Fan assisted heater (Fig. 4-12 item 18)

The fan heater is located in the right hand corner of the module footwell. A 240 volt supply is required to operate the fan heater.

442. Drawers (Fig. 4-12 item 19 and 22)

Four groups of drawers are located under the side bench with each group comprising two shallow and two deep drawers. A gasket drawer is located in the centre section of the front bench.

443. Stowage bin (Fig 4-12 item 20)

The stowage bin located under the front bench, provides stowage for extension cables, etc.

444. Circuit breaker and power selection panel (Fig. 4-12 item 21)

The circuit breaker and power selection panel located on the front left hand side of the module provides protection for the 24 volt, 110 volt and 240 volt circuits. The panel also houses switches to control power, heating and cooling functions and a voltmeter to monitor module battery voltage. Over voltage arresters and voltage monitoring relays are included for the 240 volt circuits, and earth leakage circuit breakers are fitted to each general purpose outlet circuit.

445. Power cable storage reel holder (Fig. 4-12 item 23)

A power cable storage reel holder is secured to the left hand platform for power cable stowage.

446. Blackout curtains

Two full length, overlapping, walk-through blackout curtains are fitted to cover the rear door during blackout conditions. When fully draped, the curtain overlap is secured by velcro fasteners. This arrangement allows entry to the module and blackout conditions to be maintained.

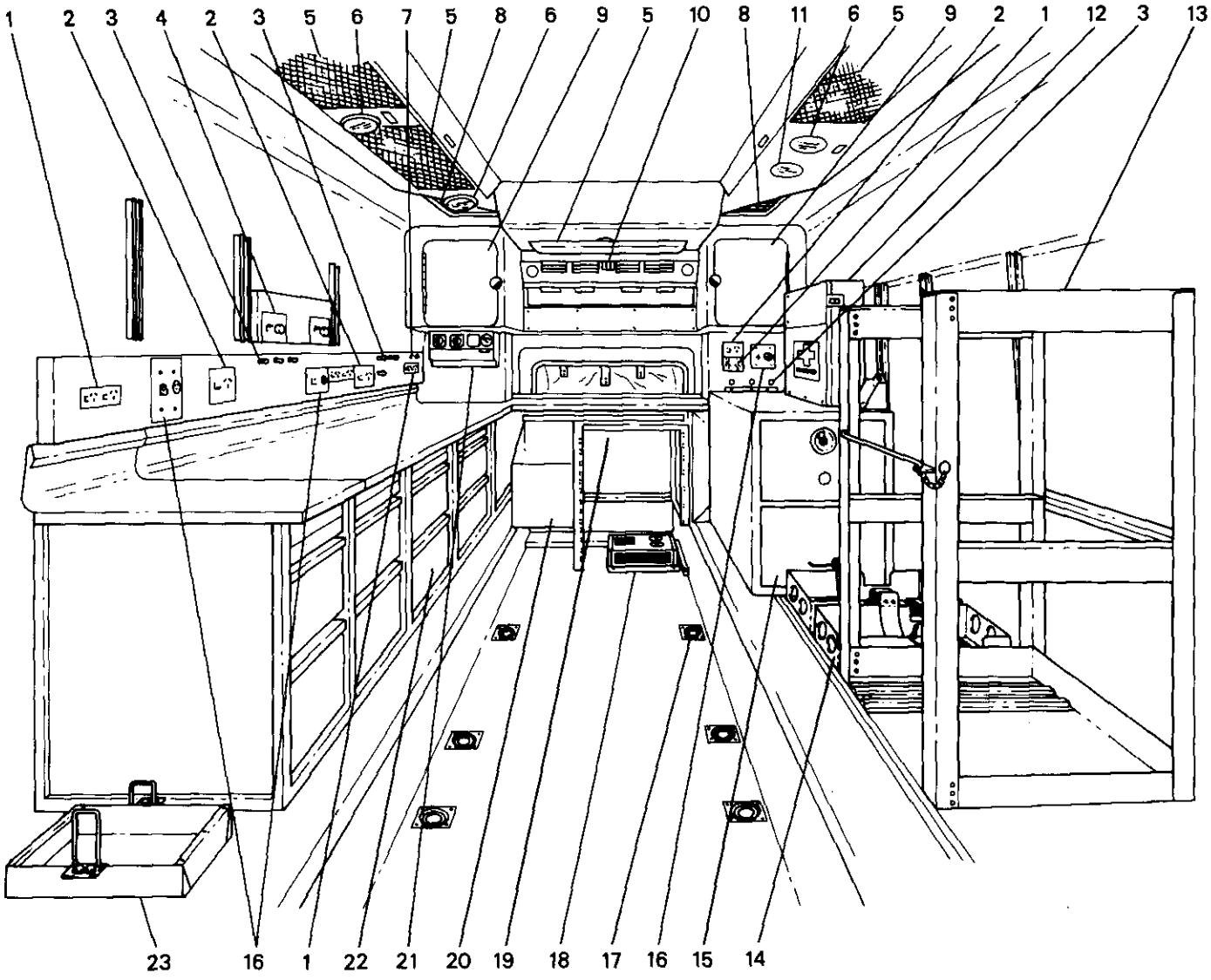

1. Power outlet sockets — 10 amp
2. Power outlet sockets — 15 amp
3. DC test terminal
4. 24 Volt DC outlet sockets
5. Fluorescent lighting
6. Emergency lamps
7. Telephone binding posts
8. Air inlet vents
9. Publication cabinets
10. Air conditioning unit
11. Blackout light
12. First aid kit
13. Stowage frames
14. Jerrican holders
15. Security filing cabinet
16. Power outlet sockets
17. Tie-down rings
18. Fan assisted heater
19. Drawers
20. Stowage bin
21. Circuit breaker and power selection panel
22. Drawers
23. Power cable storage reel holder

Figure 4-12 Module interior view

SECTION 2
EQUIPMENT OPERATING INSTRUCTIONS

General

WARNING

THE VEHICLE IS TO BE EARTHED USING THE EXTERNAL EARTH SPIKE PRIOR TO EXTERNAL 415/ 240 VOLT POWER SOURCES BEING CONNECTED TO THE VEHICLE.

447. The COMSEC module is a mobile self-contained repair facility providing stowage for repair equipment and spare parts. The correct operation and stowage of the equipment and parts is essential to enable repairs to be carried out efficiently.

Module access

448. Access to the module is gained through the rear outward opening door and by lowering the rear step.

Side Bench

449. The side bench can be located on either the left or right hand platform of the module. It is bolted to the clamping plates fitted in the guide rails (see Fig. 4-13). The bench houses six shallow and six deep drawers which are suspended on runners. Automatic locking devices enable each drawer to be locked when closed. To unlock a drawer raise its outer end clear of the locking pegs and slide it out.

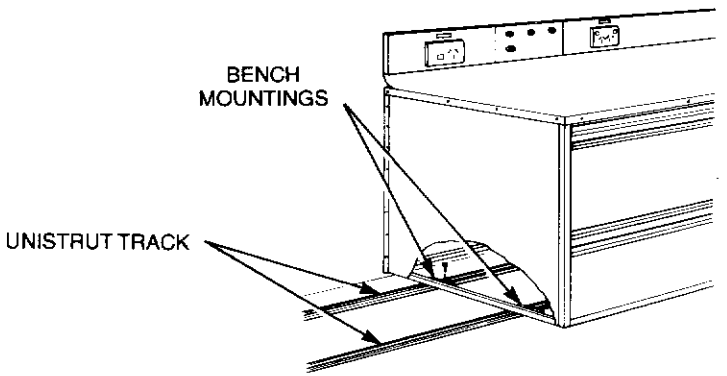

Figure 4-13 Side Bench

Parts Bin Stowage Frames

450. The parts bin stowage frames are mounted to the guide rails with clamping plates (see Fig. 4-14). The frames can be mounted on either left or right hand platform (dependant on the side bench location). To insert a bin pack, remove the locking rod safety pin and lift the locking rod free of its locating lug. Swing the hinged upright with rod outwards and slide the pin pack into position. Close the hinged upright, insert the locking rod into its locating lug and insert the safety pin.

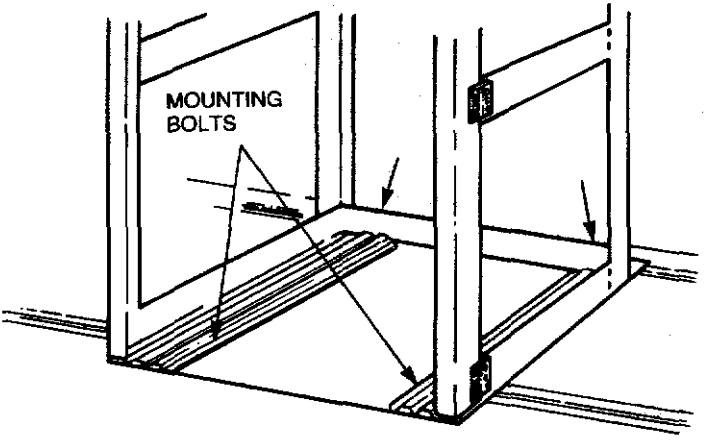

Figure 4-14 Bin Pack Mounting Frame

INDEX

A

Para.

Accelerator pedal 70
Accessories, electrical 49-82
Additional lights — 24 volt 406
Air cleaner 342
Air conditioning 411
Air conditioning compressor 412
Air conditioning unit 433
Air distribution control 55
Air inlet vents 431
Air temperature control 54
Angles, approach and departure 35
Auxiliary power socket 51
Axle, front 9, 42, 333
Axle, intermediate 330
Axle, rear 10, 44, 331

B

Battery box 99
Battery replacement — 24 volt 235
Battery Charger 422
Blackout Curtains 446
Blackout function — module 405
Blackout lighting 50
Blackout light 434
Bleeding the fuel system 315
Body and chassis fittings 84-108
Bonnet, opening 312
Bonnet release 69
Brake, parking 48, 77, 228
Brake pedal 71
Brake reservoir 343
Brakes, service 46, 47
Brakes, vehicle 15
Braking 226
Bridge classification 31
Bridge classification sign 107

Para.

C

Cab dome light switch 66
Cabin heating 53, 54, 55
Cabin ventilation 49
Cabin seating 83
Camouflage net lashing points 108
Capacities 29
Carrying capacity 26
Ceiling lights — module 404
Changing a wheel 233
Chassis 16
Chassis and body fittings 84-108
Cigar lighter 76
Circuit breaker and power selection panel 414, 444
Classification bridge 31
Classification sign, bridge 107
Cleaner, air 341
Clutch 6, 224
Clutch pedal 75
Clutch reservoir 344
Centre of Gravity (C of G) designation plate 105
Combination switch 59
Construction — module 415
Controls, air distribution 55
Cooling system 2
Coolant temperature gauge 63
Cross-country driving 231

D

Data plate, servicing 101
Data summary 1-27
DC test terminal 426
De-ditching tools 93
Dimensions 28
Drawers 442
Driving habits 222-232

E

Electric windscreen washers 65
Electrical 307

Para.

Electrical, accessories 49-82
Electrical system 18
Electrical system ignition/start switch 72, 220
Electrical trailer connection sockets 95
Comsec module construction 85, 415
Emergency lamps 429
Engine 1, 38
Engine accessory drive 3
Engine oil and oil filter change procedure 323-325
Engine starter 5
Engine, starting 220
Engine, stopping 227
Engine temperature 222
Engine warning light cluster 62
Equipment description — module 401-446
Equipment operating instructions — module 447-450
Exhaust vents — module 417
External lighting 19
Extinguisher, fire 92, 420

F

Fan control 53
Fan assisted heater 410, 441
Fan heater controls 53
Fanbelt jockey pulley 345
Filter, fuel 340
Filter, oil 322-324
Fire extinguishers 92, 423
First aid kit 435
First parade servicing 301-305
Fluorescent lighting 404, 428
Flywheel housing drain 228, 229
Foot brake pedal 71
Fording depth 30, 229
Front axle 9, 42, 334
Front suspension 12, 43
Fuel filter 340
Fuel gauge 61
Fuel sedimenters 341
Fuel switch 56
Fuel system 4

Para.

Fuel system, bleeding 315
Fuse box 80
Fuses 27

G

Gauge, coolant temperature 63
Gauge, fuel 61
Gear changing 225
Gear lever 78
Good driving habits 222-232
Ground clearance 32

H

Habits, driving 222-232
Halts on the march 309, 310
Hand throttle 68
Hazard warning switch 67
Headlights/park lights 59
Heater fan control switch 53
Heating and ventilation systems — module 403, 410, 411
High level indicator lights 408
High level reversing lights 407
High level stop and tail lights 409
High/low beam dipper switch 59
Horn, electric 59

I

Ignition switch 72, 220
Instruments 49-82, 223
Instrument lights 52
Intermediate axle 331
Internal dimensions — module 28
Introduction 36
Introduction — module 401

J

Jacking plate 104
Jerrican stowage 90, 437

K

L

Last parade servicing 311
Light, blackout 434
Light, map reading 82
Lighting, blackout 50
Lighting, external 12 volt 19
Lighting, internal 12 volt 20
Lighting, internal 24 volt 21
Lighting, internal 240 volt 22
Lighting, military 23
Lighting, reduced 50
Lights, additional — 24 volt 406
Lights ceiling — module 404
Lights, instrument 52
Lights, warning 62
List of agents 216
Lubrication 320-344

M

Main lighting switch 73
Maintenance, periodical 316
Map reading light 82
Military lighting 23
Mirrors, rear vision 98
Module access 448
Module construction 415
Module interior layout 423-446
Module internal dimensions 25
Moving off and running 308
Moving the vehicle 221

N

Nomenclature plate 100
Normal, blackout and reduced lighting switch 50

O

Odometer 60
Oil filter and engine oil change procedure 322-324

Para.

Opening bonnet for servicing access....312
Operational and logistic concepts....37
Operational and logistic concepts — module....402
Operation, vehicle....217-234

P

Panel light dimmer control....52
Parking....228
Parking brake....48, 77
Parts bin stowage frames....450
Pedal, accelerator....70
Pedal, brake....71
Pedal, clutch....75
Performance....24
Periodical maintenance....316
Pintle, towing....96, 338
POL stowage....90, 437
Plate, C of G designation....105
Plate, jacking....104
Plate, nomenclature....100
Plate, servicing data....101
Plate, shipping data....102
Plate, towing and dyno test data....103
Propeller shafts....11, 338
Power cable storage reel holder....445
Power inlet sockets....419
Power outlet sockets — 15 amp....425
Power outlet sockets — 10 amp....424, 439
Power supply — 240 volt....413
Publication cabinets....432

Q

R

Radiator coolant....314
Rear axle....10, 44, 332
Rear door....416, 448
Rear side windows....89
Rear step....418
Rear suspension....13, 45

Rear vision mirrors 98
Rear window 87
Reduced lighting 50
Reservoir, brake 342
Reservoir, clutch 343
Reservoir, steering 335
Rifle clips and butt boxes 91
Roof hatch 88

S

Seat belts 97
Seating, cabin 83
Security filing cabinet 438
Sedimenters, fuel 340
Service brakes 46, 47
Servicing, data plate 101
Servicing, first parade 301-305
Servicing, last parade 311
Shafts, propeller 11, 337
Shift pattern, main transmission 78
Shift lever, main transmission 78
Shift lever, transfer case 79
Shift pattern, transfer case 79
Shipping data plate 102
Side bench 449
Sign, bridge classification 107
Sign, unit/formation 108
Slinging and tie-down points 34
Spare wheel stowage 94
Special requirements 317
Speedometer and odometer 60
Starter switch 72
Starting, engine 220
Start the vehicle 306
Steerable front drive axle 42
Steering 14
Steering reservoir/box 336
Stopping the engine 227
Stowage 86
Stowage frames 436, 450
Stowage bin 443

Stowage, POL....90, 437
Suspension, front....12, 43
Suspension, rear....13, 45
Switch, turn indicator....59
Switch, hazard warning....67
Switch, headlights/park....73
Switch, high/low dipper....59
Switch, ignition/start....72
Swivel pin housings....337
System, electrical....18

T

Temperature coolant gauge....63
Telephone binding posts....430
Throttle, hand....68
Tie-down rings....440
Towing the vehicle....234
Towing and dyno test data plate....103
Towing pintle....96, 339
Trailer connection socket....95
Transfer case....8, 40, 328-330
Transfer case control switch....57
Transfer case shift lever....79
Transfer case shift pattern....79
Transformer — 240 volt to 24 volt....420
Transformer — 240 volt to 110 volt....421
Transmission....7, 39, 326-327
Transportability....33
Tyres and wheels....17

U

Unit/formation signs....106

V

Vehicle body construction....84
Vehicle nomenclature plate....100
Vehicle operation....217-234
Vehicle, start....220
Ventilation....49
Ventilator control....49
Ventilation and heating systems — module....403, 410, 411

Para.

Voltmeter — 24 volt 58
Voltmeter — 12 volt 64

W

Warning light cluster 62
Warranty and repair 201-216
Washers, windscreen 65
Wheel changing 233
Wheels and tyres 17
Windscreen washer and wiper switch 65

NOTES

NOTES

NOTES