SEMI-TRAILER, CARGO, 12.5 METRE, HEAVY, MC4 — FRUEHAUF HEFTY PLATFORM

TECHNICAL DESCRIPTION

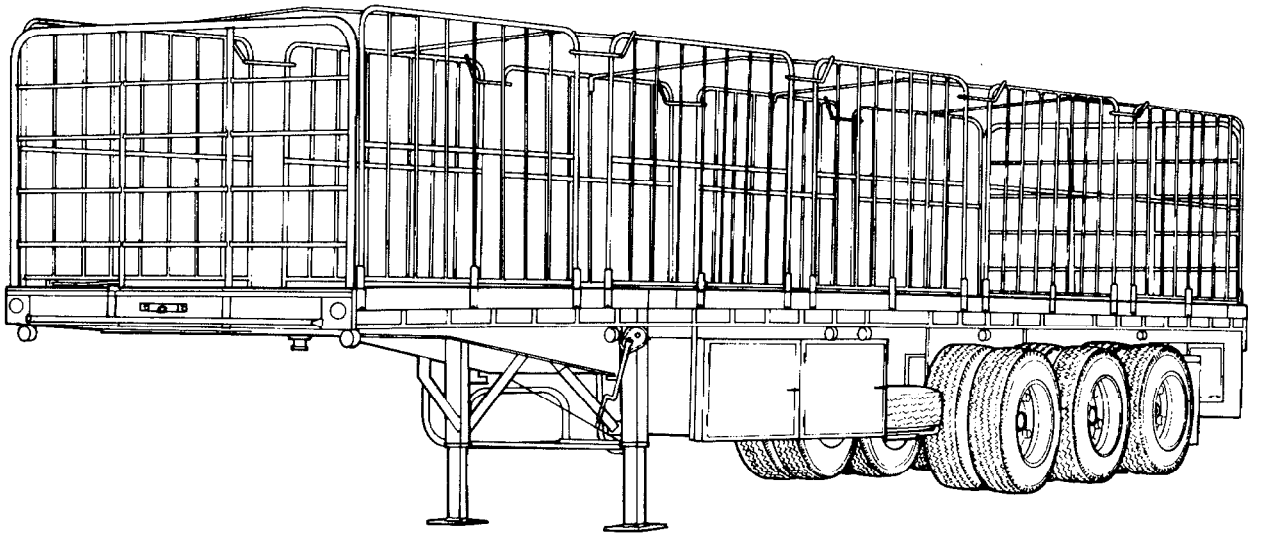

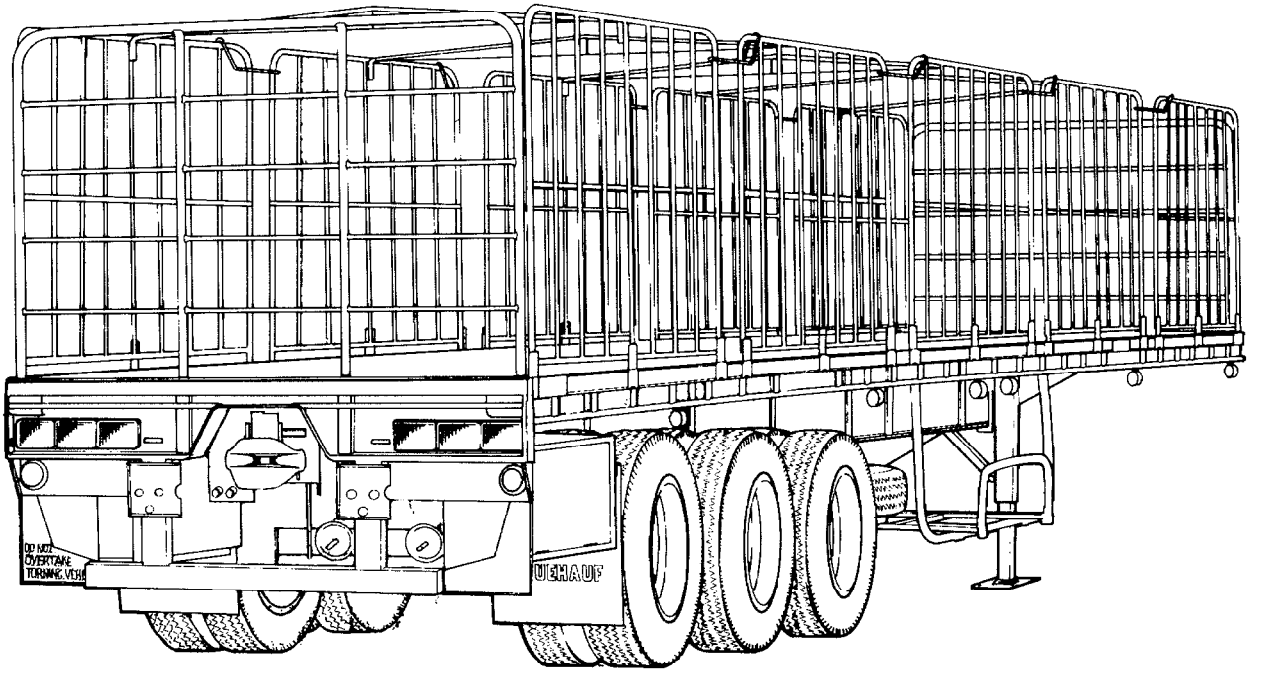

UNCONTROLLED WHEN PRINTED

LIST OF CONTENTS

	Para No.	Page No.
LIST OF CONTENTS		i
LIST OF ILLUSTRATIONS		ii
LIST OF TABLES		iii
ASSOCIATED PUBLICATIONS		iv
MAINTENANCE SUPPLY ITEM (MSI) IDENTIFICATION		v
INTRODUCTION		1
GENERAL INFORMATION		1
Axles	4	1
Suspension	5	1
Service Brakes	6	2
Emergency/Parking Brakes	9	2
Frame	12	2
Lighting	14	3
Electrical Trailer Connection	15	3
Hubodometer	16	3
Wheels	17	3
DETAILED DESCRIPTION		3
Axles	18	3
Emergency/Parking Brakes		
Spring Brake Relay Valve (CA41 PARC)	22	4
Service Brakes		
Relay Valve (CA43)	29	6
Service Brake Relay Valve (CA38)	33	6
Slack Adjusters	39	7
Spring Brake Chambers	41	7
Frame		
Construction	46	8
Apron Plate	47	8
Decking	48	8
Support Legs	49	8
Tow Coupling	50	8
Spare Wheel Carrier	52	9
Gate Rack	53	9
Twistlocks	55	10
Tie Down Rails	56	10
Stowage Bins	57	10

UNCONTROLLED WHEN PRINTED

LIST OF ILLUSTRATIONS

Fig. No.	Title	Page No.
1	Semi-trailer, Cargo, Heavy, MC4	1
2	Fruehauf F3 Suspension	1
3	Air Brake System	2
4	Semi-trailer Lighting	3
5	Axle Assembly	3
6	Axle and Hub — Exploded View	3
7	Spring Brake Relay Valve — Charging	4
8	Spring Brake Relay Valve — Spring Brake Release	4
9	Spring Brake Relay Valve — Emergency Line Failure	5
10	Spring Brake Relay Valve — Service Line Failure	5
11	Spring Brake Relay Valve — Application	5
12	Spring Brake Relay Valve — Anti-compound Function	5
13	Relay Valve — Released Position	6
14	Service Brake Relay Valve — Applying Position	6
15	Service Brake Relay Valve — Balanced Position	6
16	Service Brake Relay Valve — Releasing Position	7
17	Slack Adjuster — Exploded View	7
18	Slack Adjuster — Adjustment	7
19	Spring Brake Chamber — Normal Driving	7
20	Spring Brake Chamber — Service Brake Application	7
21	Spring Brake Chamber — Parking or Emergency Application	8
22	Spring Brake Release Stud	8
23	I-beam Assembly	8
24	Retractable Support Legs	9
25	Tow Coupling	9
26	Spare Wheel Carrier	9
27	Gate Rack	10
28	Gate Rack Mounting Bracket	10
29	Twistlocks	10

UNCONTROLLED WHEN PRINTED

LIST OF TABLES

Table No.	Title	Page No.
1	Location of Identification Numbers on Maintenance Supply Items	v

UNCONTROLLED WHEN PRINTED

ASSOCIATED PUBLICATIONS

1. Standing Orders for Vehicle Operation and Servicing

2. Australian Army Books:
   TGM 120 Record Book for Service Equipment — Army

3. Complete Equipment Schedules (CES):

   (a) SCES 12078 — Semi-trailer, Cargo, Heavy, MC4

4. EMEI VEH A119-24 — Repair of Vehicles Under Warranty Agreement — Policy Instruction

   (a) Truck, Tractor, Heavy, MC4, International SF2670 W/Integral Sleeper
   (b) Semi-trailer, Tank/Plant Transporter, MC4, Drake Expandable T2
   (c) Semi-trailer, Cargo, 12.5 Metre, Heavy, MC4, Fruehauf Hefty Platform
   (d) Semi-trailer, Tank, Water, Heavy, MC4, Fruehauf TAG 37 000 Litre
   (e) Dolly, Semi-trailer, Converter, Heavy, MC4, Fruehauf EY-F2

5. EMEI VEH H 470 — Data Summary

6. EMEI VEH H 473 — Unit Repair

7. EMEI VEH H 474-1 — Field and Base Repair

8. EMEI VEH H 479 — Servicing Instruction

9. Australian Change in War Materiel 31283

10. Repair Parts Scale 02199

UNCONTROLLED WHEN PRINTED

MAINTENANCE SUPPLY ITEM (MSI)

IDENTIFICATION

Table 1 — Location of Identification Numbers on Maintenance Supply Items

Axle No. — Stamped on the axle tube

UNCONTROLLED WHEN PRINTED

SEMI-TRAILER, CARGO, 12.5 METRE, HEAVY, MC4 — FRUEHAUF HEFTY PLATFORM

TECHNICAL DESCRIPTION

INTRODUCTION

1. This EMEI contains the technical description of the semi-trailer, cargo, heavy, MC4 shown in Fig. 1. All relevant weights, dimensions and performance figures are detailed in the Data Summary EMEI VEH H 470.

GENERAL INFORMATION

2. The semi-trailer, cargo, heavy, MC4 is used to facilitate the movement of stores over all types of roads and short distances off road. The trailer is based on the standard Fruehauf Hefty Platform 35 tonne commercial trailer.

3. The semi-trailer is fitted with twistlocks for the carriage of ISO containers and has the ability, through a pin coupling at the rear of the trailer, to be used in a road train configuration.

Axles

4. The axles are Fruehauf Propar axles fitted with air operated, S-cam actuated twin-shoe drum brakes. The axles are rated at 11.3 tonne for continuous operation. However, this is limited to 9 tonne per axle by the suspension.

Suspension

5. The trailer utilizes a Fruehauf F3 weld-on suspension configured to provide an extreme axle centre spacing of 2490 mm (see Fig. 2). The suspension mounting brackets are welded to the frame I-beams. Six semi-elliptic leaf springs and four equaliser beams provide the suspension with a continuous operation rating of 27 tonne.

UNCONTROLLED WHEN PRINTED

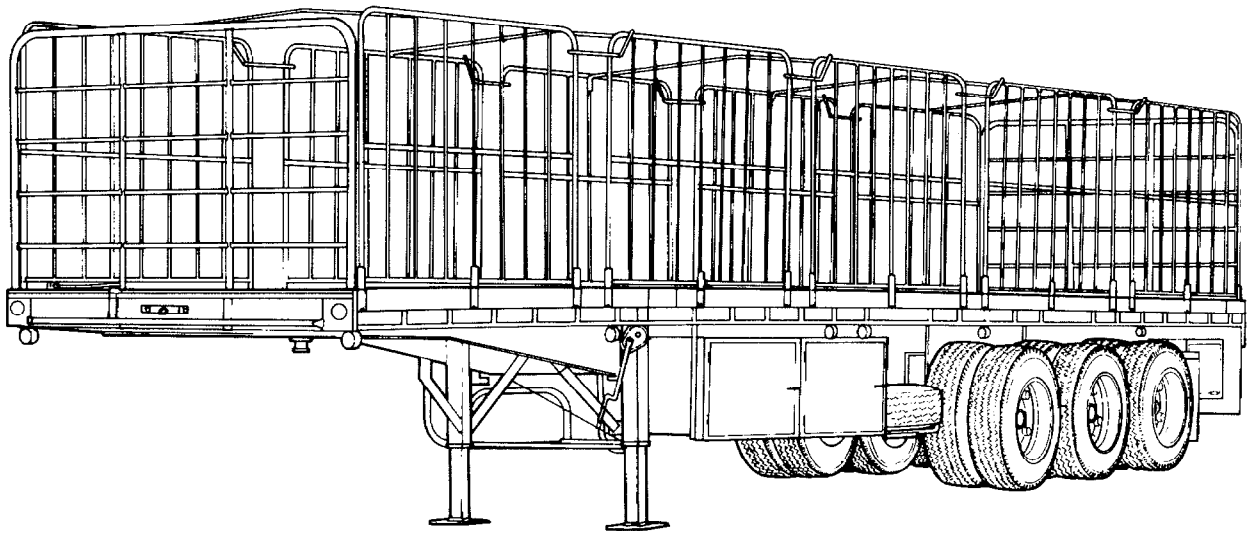

Figure 1 — Semi-trailer, Cargo, Heavy, MC4

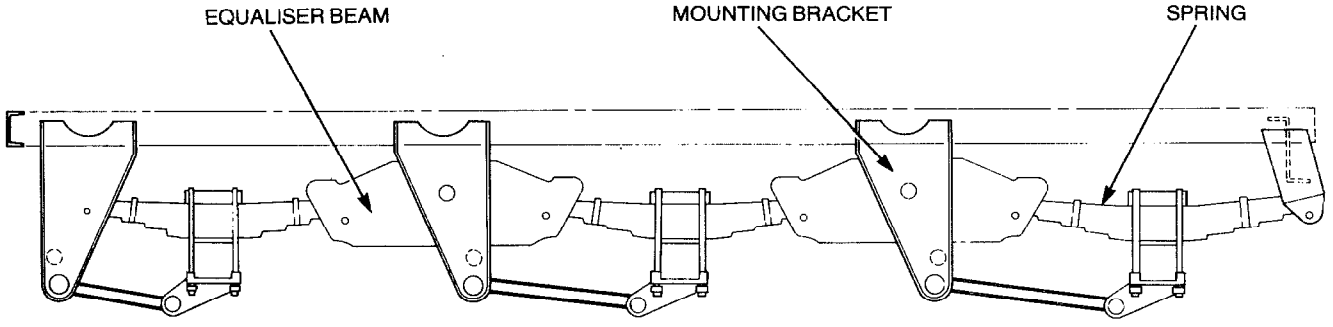

Figure 2 — Fruehauf F3 Suspension

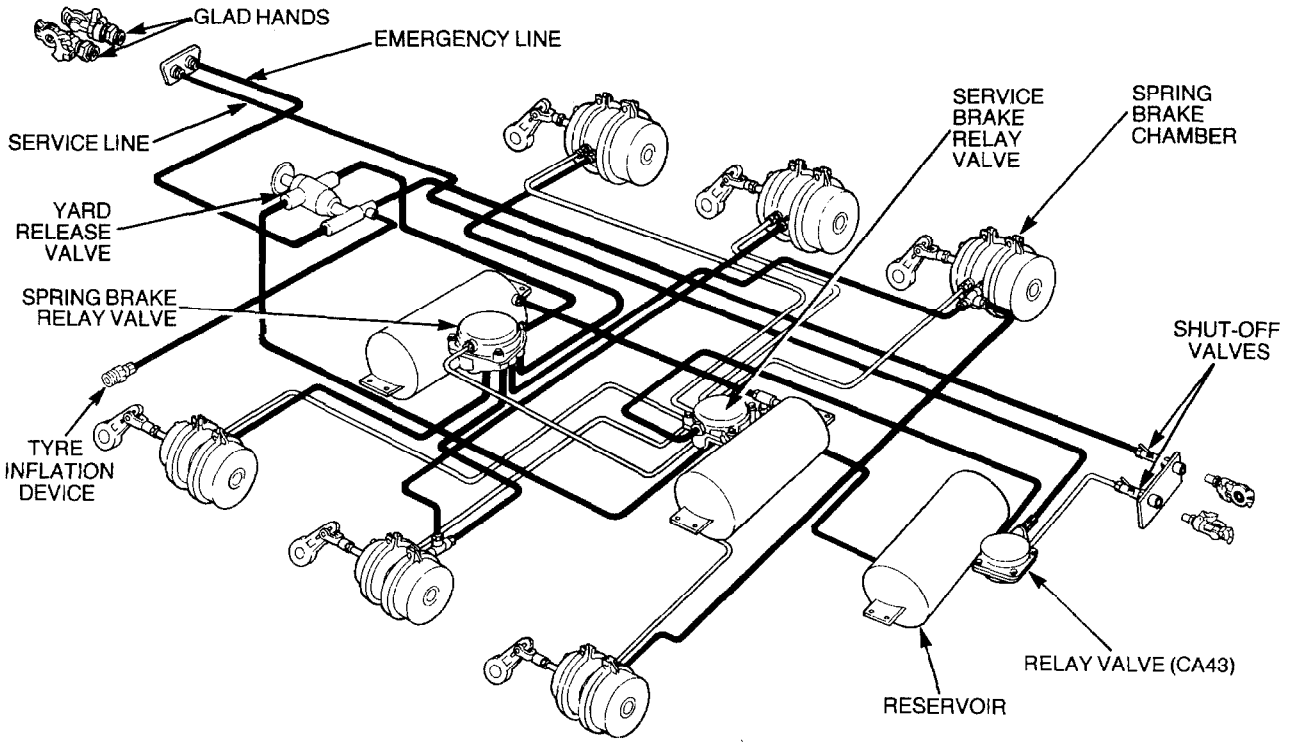

Figure 3 — Air Brake System

Under emergency conditions a rating of 30 tonne can be applied.

Service Brakes

6. Air operated brakes comprising a service brake and spring brake chamber are fitted to each axle on the trailer. The service and emergency lines are connected to the towing vehicle via glad hand couplings. This supplies the air to the three air reservoirs (see Fig. 3), which supply the service and emergency parking brakes and the braking system of a towed dolly converter.

7. The service brakes are S-cam actuated drum brakes, and operate when air pressure acting on a plunger diaphragm force a lever to turn the S-cam between rollers attached to the brake shoes, causing the brake linings to bear against the drum surface.

8. The service and emergency air lines for connection to the towing vehicle are connected to the front of the trailer. Air connections for a towed dolly converter are located at the rear of the trailer on a fixed plate attached to the tow coupling mounting. The towed dolly converter air connections are fitted with hand operated shut-off valves.

Emergency/Parking Brakes

9. Spring brakes are used as emergency and parking brakes and are fitted to all axles.

10. The spring brakes are integral with the service brakes in the brake chambers, but unlike the service brakes which are air operated, the emergency/parking brakes are spring operated. The strong springs are normally held in a compressed state by air pressure acting against the diaphragm on which the spring sits. Only when the air pressure is removed, either by driver control when applying the parking brakes, or by loss of air from the brake system, will the springs expand and apply the brakes on each axle.

11. A hand operated yard release valve is fitted to enable the semi-trailer to be moved without connection to a towing vehicle's air supply. Residual air in the trailer reservoirs is utilized to release the spring brakes, via the yard release valve. Accordingly this method can only be used twice before exhausting the air supply.

Frame

12. The fabricated steel frame consists of two I-beam chassis rails, to which are welded a front and rear coaming rail, 27 crossmembers and two side coaming rails. A rear under-run bar, king pin apron plate and flush mounted mild steel decking are also welded to the frame.

13. In addition, the following items are either welded or bolted to the frame:

a. 90 mm king pin,
b. support legs,
c. 50 mm tow coupling,
d. spare wheel carrier,
e. gate rack,
f. twistlocks,

UNCONTROLLED WHEN PRINTED

g. tie-down rails, and

h. three stowage bins.

Lighting

14. The semi-trailer is fitted with standard 12V rear vehicle lighting and side clearance lights. Two combination blackout, stop and marker lights are fitted in close proximity to the rear lighting (see Fig. 4).

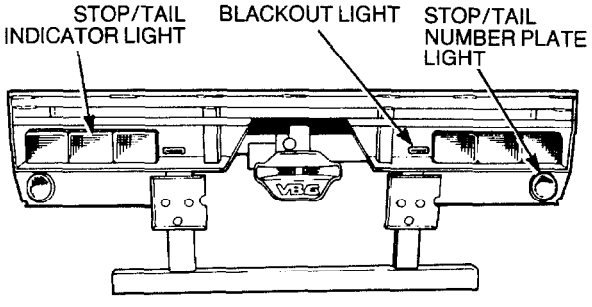

Figure 4 — Semi-trailer Lighting

Electrical Trailer Connection

15. A 12-pin NATO socket is fitted on the front coaming rail of the trailer for connection to the towing vehicle. A 12-pin NATO socket is attached to a panel at the rear of the trailer for connection of a towed dolley converter.

Hubodometer

16. A Stemco-Engler hubodometer is located on the left hand side of the trailers centre axle and records the total distance travelled in kilometres for servicing purposes.

Wheels

17. The wheels on the trailer consist of 8.25 DC x 22.5 in. one piece rims on cast spoke hubs. Each rim is fitted with a 11R22.5 16 ply tubeless radial tyre. A 4.25 in. spacer is utilized between the dual wheels. A tyre inflation facility is located on the left hand side of the trailer.

DETAILED DESCRIPTION

Axles

18. The axle tube is formed from a square section steel billet approximately 127 mm (5 in.) across the flats and an overall length of 2086 mm (82.125 in.). Brackets are welded to the axle tube to allow the S-cam shafts and brake chambers to be mounted in a cams-front situation (see Fig. 5). A backing plate is welded to the tube to act as a mounting bracket for the brake shoes.

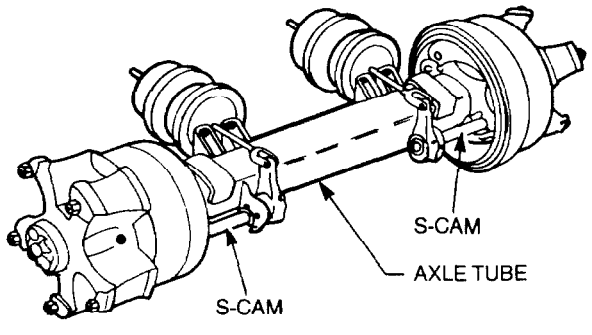

Figure 5 — Axle Assembly

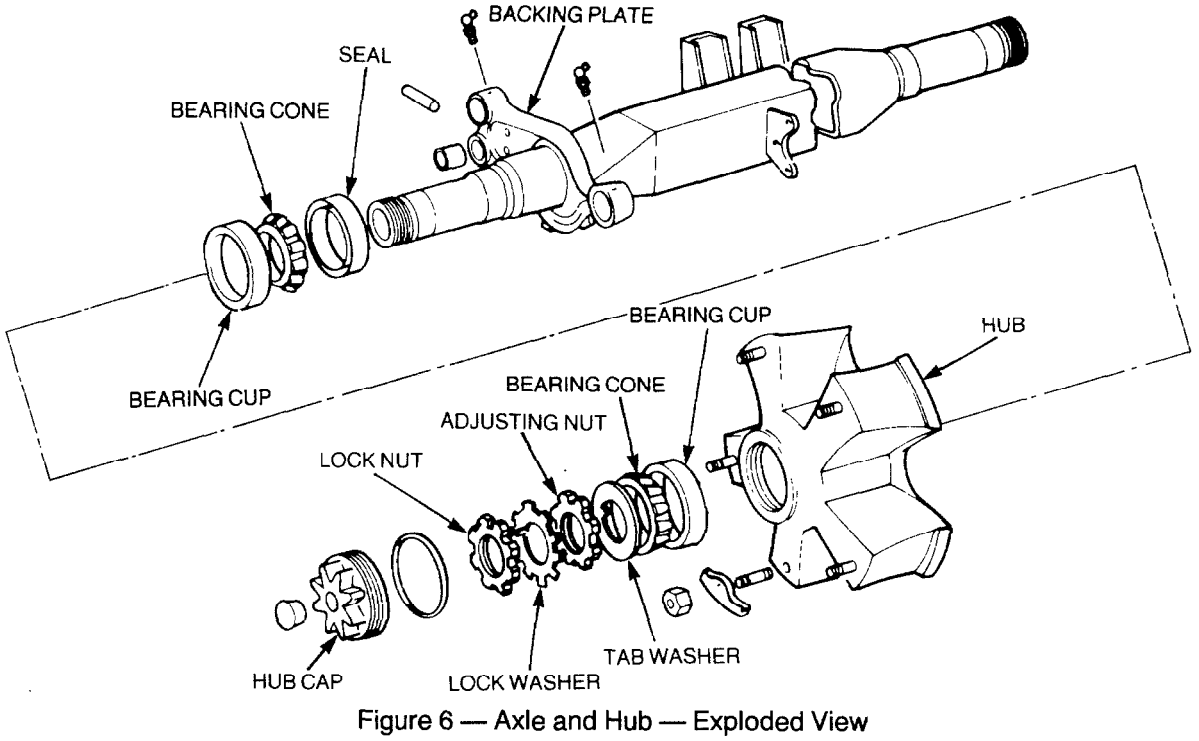

Figure 6 — Axle and Hub — Exploded View

UNCONTROLLED WHEN PRINTED

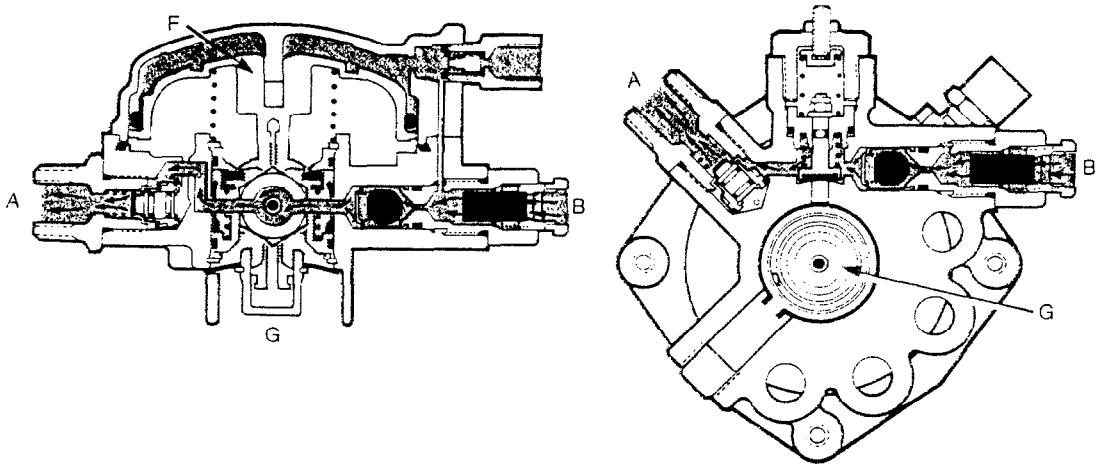

Figure 7 — Spring Brake Relay Valve — Charging

UNCONTROLLED WHEN PRINTED

19. The hubs are supported on two tapered roller bearings on the axle tube and are retained by a hexagonal nut and tab washer. The hub is a cast five-spoke one-piece type and is secured to the brake drum by five bolts, washers and nuts. A transparent hub cap is fitted to allow oil level to be checked at a glance on five out of the six hubs (see Fig. 6). The remaining hub is fitted with a hubodometer in place of the hub cap, to record the distance travelled, in kilometres, for servicing purposes.

20. Two semi-eliptical 13-leaf springs are secured to each axle, along with a saddle plate, by four U-bolts. Each spring is located in a spring hanger and equaliser beam, but not secured. Wear plates are provided in the hanger and beams (see Fig. 2).

21. Three adjustable radius rods are installed on the right hand side of the trailer, to enable the axle alignment to be adjusted.

Emergency/Parking Brake

Spring Brake Relay Valve (CA41 PARC)

22. A spring brake relay valve is installed on the front reservoir to provide a means of admitting and releasing air to and from the spring brake chambers.

23. Air supplied from the towing vehicle, via the emergency line, enters the PARC valve through the check valve and filter assembly located in port B. The air then passes through the valve body and exits through port A, which is directly mounted to the reservoir, to supply the reservoir. Emergency air also passes through a body drilling to allow air to enter the chamber above piston F (see Fig. 7). At this stage, air is prevented from entering the spring brake chambers by the holdback piston assembly, valve E (see Fig. 8).

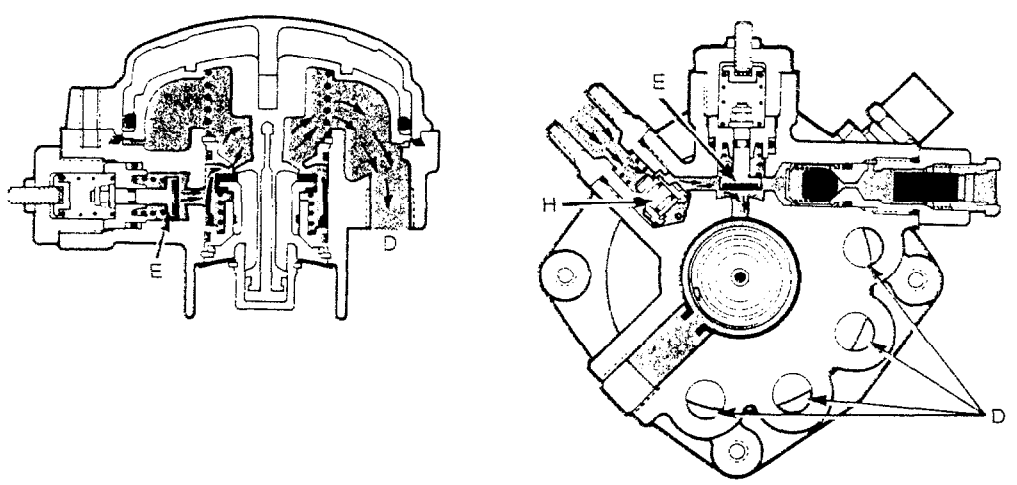

Figure 8 — Spring Brake Relay Valve — Spring Brake Release

24. When air in the service reservoir reaches approximately 435 kPa (63 psi), the valve E opens and allows air through the four D ports releasing the springs brakes (see Fig. 8). A pressure balance now occurs at valve H.

25. In the event of the air emergency line failing, all air is exhausted from port B, piston F is raised to open ports D (four off) and G. Air in the spring brake chambers is now vented through port G, allowing the spring brakes to apply (see Fig. 9).

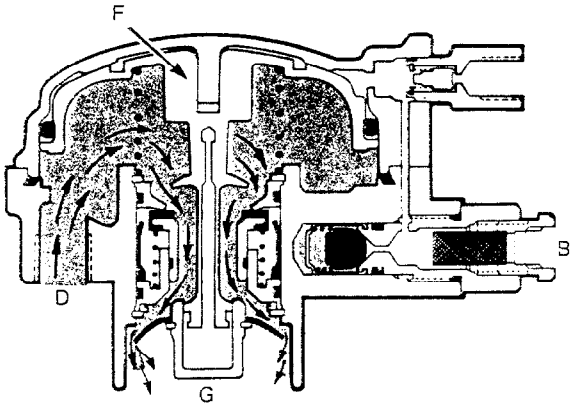

Figure 9 — Spring Brake Relay Valve — Emergency Line Failure

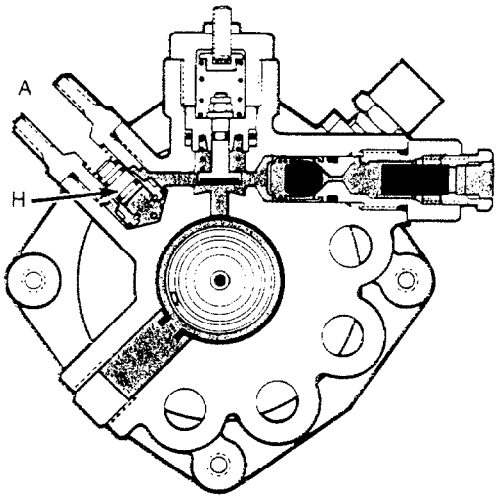

Figure 10 — Spring Brake Relay Valve — Service Line Failure

26. Should the spring brake relay valve become detached from the air reservoir or a service brake chamber diaphragm fail, the brakes will not apply on any axle due to valve H sealing the reservoir port A and containing full line pressure in the spring brake system (see Fig. 10).

27. As the emergency line pressure decreases, piston F rises to open ports D to exhaust port G and applies the spring brakes (see Fig. 11). Valve H now returns to the open position under spring pressure. The spring brakes cannot be released until the fault has been rectified.

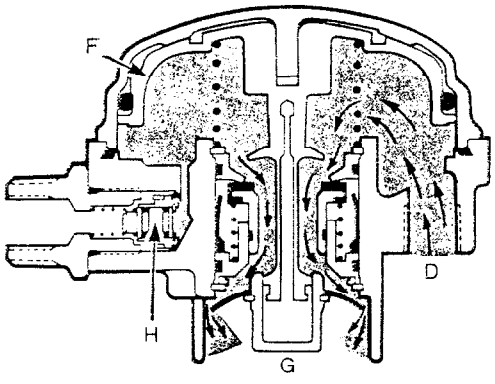

Figure 11 — Spring Brake Relay Valve — Application

28. The spring brake relay valve is designed to prevent both service and spring brakes applying together. Air pressure through port B holds the check valve in port C, which is connected to a delivery line running from the relay valve, in the closed position. Should the towing vehicle brakes be applied and the emergency line be exhausted simultaneously, e.g. tractor protection valve being applied, delivery air pressure from the relay valve would pass through the check valve in port C (see Fig. 12) and depress piston F. This in turn, would hold the spring brakes in the released position until the brake valve in the towing vehicle is released.

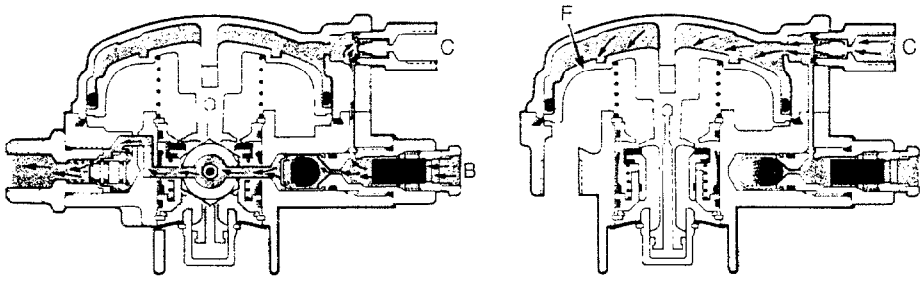

Figure 12 — Spring Brake Relay Valve — Anti-compound Function

UNCONTROLLED WHEN PRINTED

Service Brakes

Relay Valve (CA43)

29. The relay valve is fitted to speed up the application and release time of the trailer brakes in conjunction with the towing vehicle's foot brake valve. The valve is fitted in the rear air reservoir.

30. When the relay valve is in the OFF position, the exhaust port is open which allows the service brake chambers to remain at atmospheric pressure.

31. When the foot brake is applied, air is passed down the service line from the towing vehicle and enters port A in the top cover (see Fig. 13). The piston moves downwards closing the exhaust port. Further increase in service line pressure allows air to pass from the air reservoir to the service brake relay valve via the delivery port.

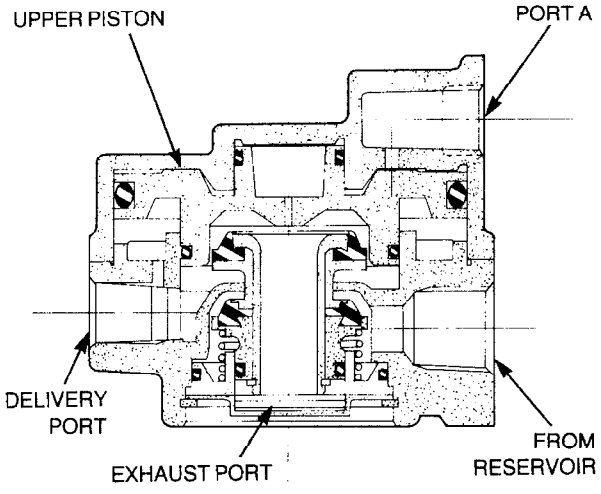

Figure 13 — Relay Valve — Released Position

32. When the service line pressure decreases, the upper piston moves up closing the inlet port and opening the exhaust port. Rapid decrease in service line pressure causes the valve to react like a quick release valve.

Service Brake Relay Valve (CA38)

33. The service brake relay valve is fitted to control the air pressure to the service brake chambers in conjunction with the towing vehicle's foot brake valve and the CA43 relay valve. The relay valve is installed on the centre air reservoir.

34. When the relay valve is in the OFF position, the exhaust port is open, which allows the service brake chambers to remain at atmospheric pressure.

35. When the foot brake is applied, air is passed down the service line from the towing vehicle via the relay valve (CA43) and enters port A in the top cover (see Fig. 14). The piston moves downwards closing the exhaust seat against the inlet/exhaust valve. When the pressure acting on the piston is sufficient to overcome the valve spring, the inlet/exhaust valve is moved away from the inlet seat and air pressure is delivered to the service brake chambers directly from the reservoir.

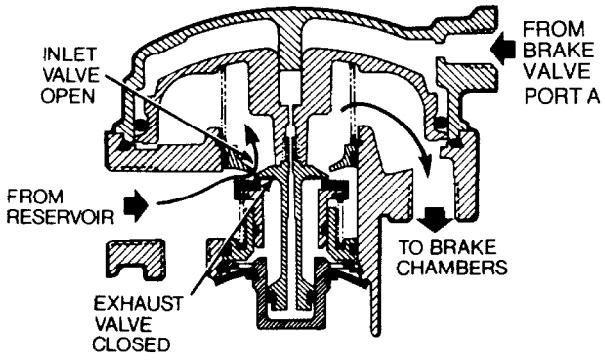

Figure 14 — Service Brake Relay Valve — Applying Position

36. As compressed air builds up in the brake chambers, the pressure builds up on the underside of the piston, moving the piston upwards allowing the inlet/exhaust valve to contact the inlet seat in the body. The valve is in a balanced state with the inlet and exhaust seats closed. In this condition, the valve has delivered compressed air corresponding to the drivers application of the brake pedal (see Fig. 15).

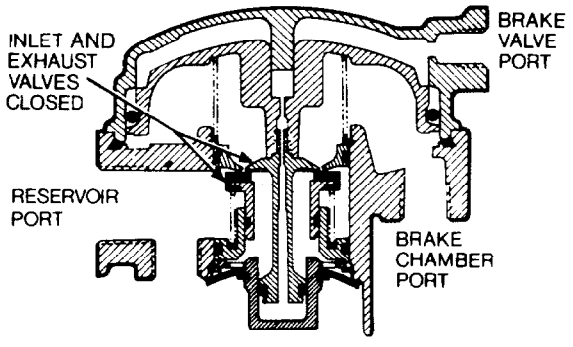

Figure 15 — Service Brake Relay Valve — Balanced Position

37. As the driver exerts more pressure on the brake pedal, the pressure on the top of the piston is increased, this moves the inlet/exhaust valve away from the inlet seat and allows more compressed air to flow to the service brake chamber. If the driver permits the pedal to return slightly, some air is exhausted from the foot brake valve and from the top of the piston, allowing the piston to move upwards and opening the exhaust passage, releasing some air from the service brake chambers to atmosphere.

UNCONTROLLED WHEN PRINTED

38. When the driver releases the foot brake completely, all the air is released from the top of the piston through the brake valve, allowing the piston to rise and opening the exhaust passage (see Fig. 16). This allows all the air from the service brake chambers to pass through the exhaust diaphragm to atmosphere and release the brakes fully.

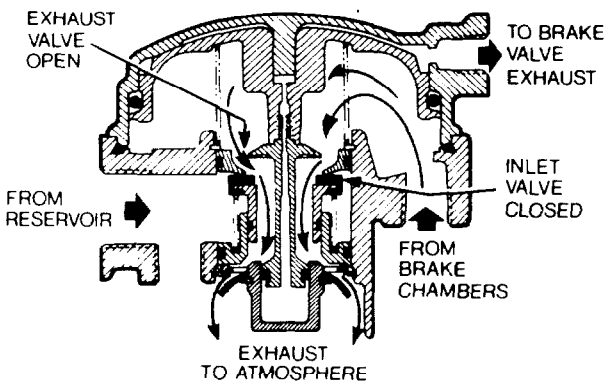

Figure 16 — Service Brake Relay Valve — Releasing Position

Slack Adjusters

39. The slack adjusters act as a lever during normal braking for brake application, provide a means of adjusting the brakes, and prevent the over extension of the diaphragm. Brake adjustment can be made after depressing the worm shaft lock and then turning the adjusting screw of the adjuster with a spanner so that is rotates the wormshaft (see Fig. 17).

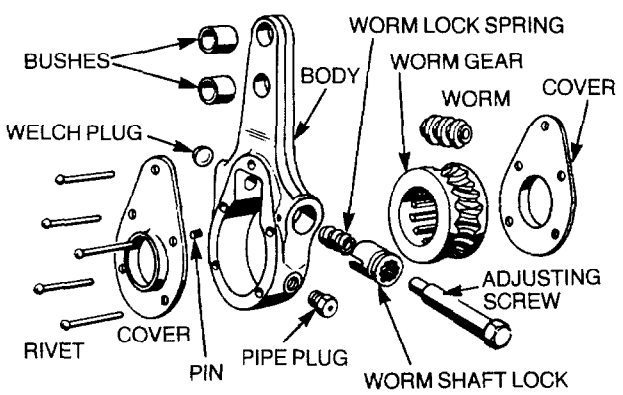

Figure 17 — Slack Adjuster — Exploded View

40. The wormshaft meshes with the worm gear which is connected to the brake cam, so by turning the worm gear the brake cam spreads the shoes and compensates for lining wear. The slack adjuster screws must be locked after adjustment and the adjuster must be just over 90 degrees to the brake chamber push rod when the brakes are applied (see Fig. 18).

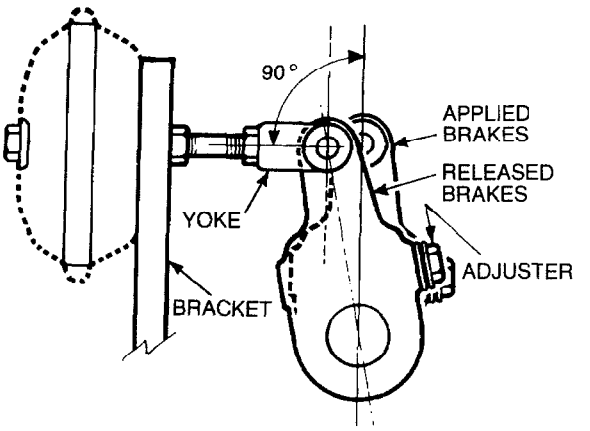

Figure 18 — Slack Adjuster — Adjustment

Spring Brake Chambers

41. The spring brake chamber can be used as a parking brake, an emergency brake in the event of loss of air from the service brakes and an emergency brake operated from a cab mounted valve.

42. During normal driving, air pressure overcomes the pressures exerted by the spring in the spring brake chamber (see Fig. 19).

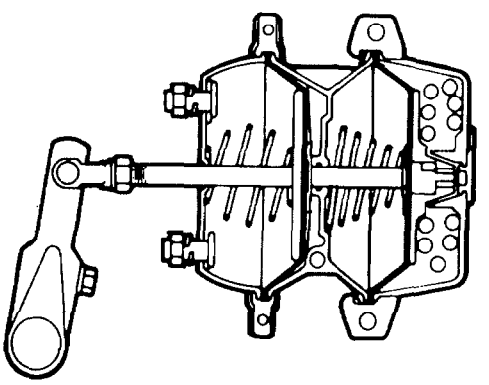

Figure 19— Spring Brake Chamber — Normal Driving

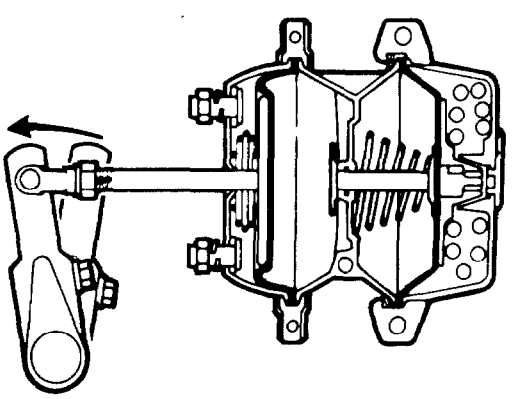

Figure 20— Spring Brake Chamber — Service Brake Application

UNCONTROLLED WHEN PRINTED

43. As the footbrake is applied, the spring remains compressed and the service brake chamber is allowed to operate independantly (see Fig. 20).

44. When the park brake valve is operated in the towing vehicle, air is exhausted from the spring brake chamber (see Fig. 21), permitting the spring to apply the service brake. In the event of an air loss in the spring brake circuit the brakes would apply automatically.

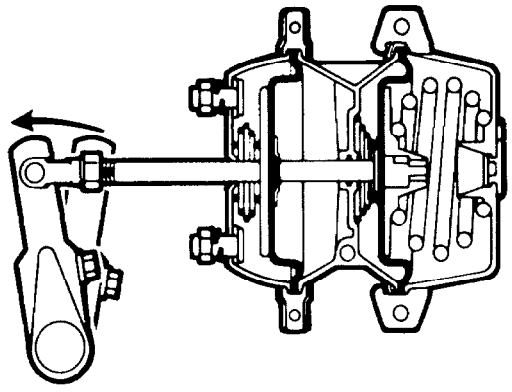

Figure 21 — Spring Brake Chamber — Parking or Emergency Application

45. A provision has been incorporated in the spring brake chamber to mechanically release the spring, by releasing the special tool from its holder and inserting it into the pressure plate (see Fig. 22). Turn the release tool one quarter of a turn to seat the cross pin, then turn the nut until the spring is fully compressed. This provision is for emergency use only.

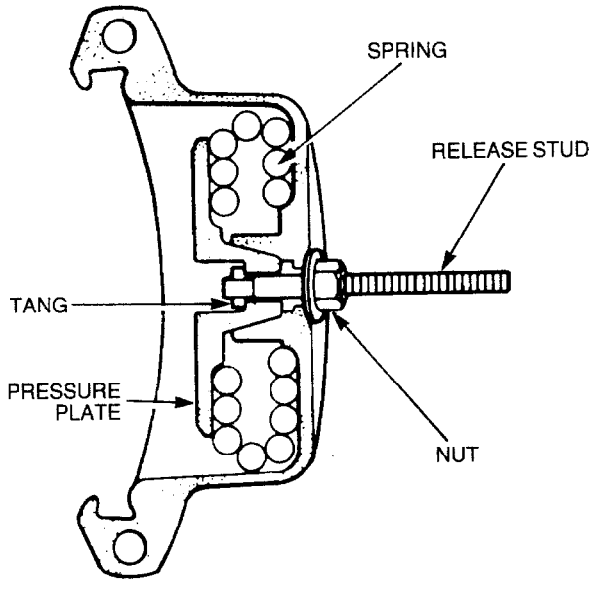

Figure 22 — Spring Brake Release Stud

Frame

Construction

46. The frame is constructed from two steel I-beam chassis rails, with openings in the I-beams to allow for the installation of 27 cross members (see Fig. 23), which are then welded in position. The side, rear and front coaming rails are welded to the cross members and the I-beam chassis rails. Provision is made in the coaming rails to allow for the fitting of 1.52 m (5 ft) load gates.

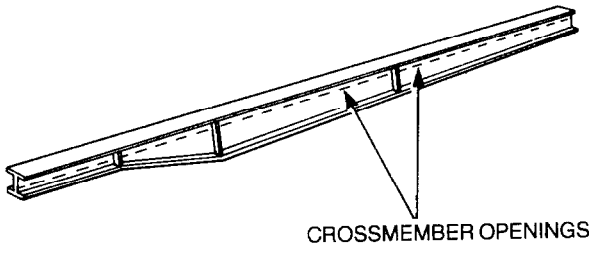

Figure 23 — I-beam Assembly

Apron Plate

47. Welded to the I-beam chassis rails, beneath the trailer front section, is an 8 mm (0.3 in.) mild steel apron plate with provision for mounting a 90 mm (3.5 in.) Jost KZ 1708 removable king pin. The king pin is secured to the apron plate by eight bolts, washers and nuts.

Decking

48. A 3 mm (0.125 in.) mild steel flush mounted chequer plate decking is welded to the coaming rails and to the longitudinal floor supports. Openings are cut in the decking adjacent to the coaming rails to allow for twistlock access to the ISO containers.

Support Legs

49. Two Jost E 200 G retractable support legs, fitted with sandshoes are mounted on the I-beam assemblies to support the trailer and load when the trailer is uncoupled from the prime mover (see Fig. 24). The left hand support leg has a two speed gearbox operated by a crank handle, which transmits drive to the right hand support leg via a connecting shaft to ensure concurrent operation of both support legs.

Tow Coupling

50. Mounted to the rear of the trailer is a VBG-8005 50 mm (2 in.) automatic pin coupling (see

UNCONTROLLED WHEN PRINTED

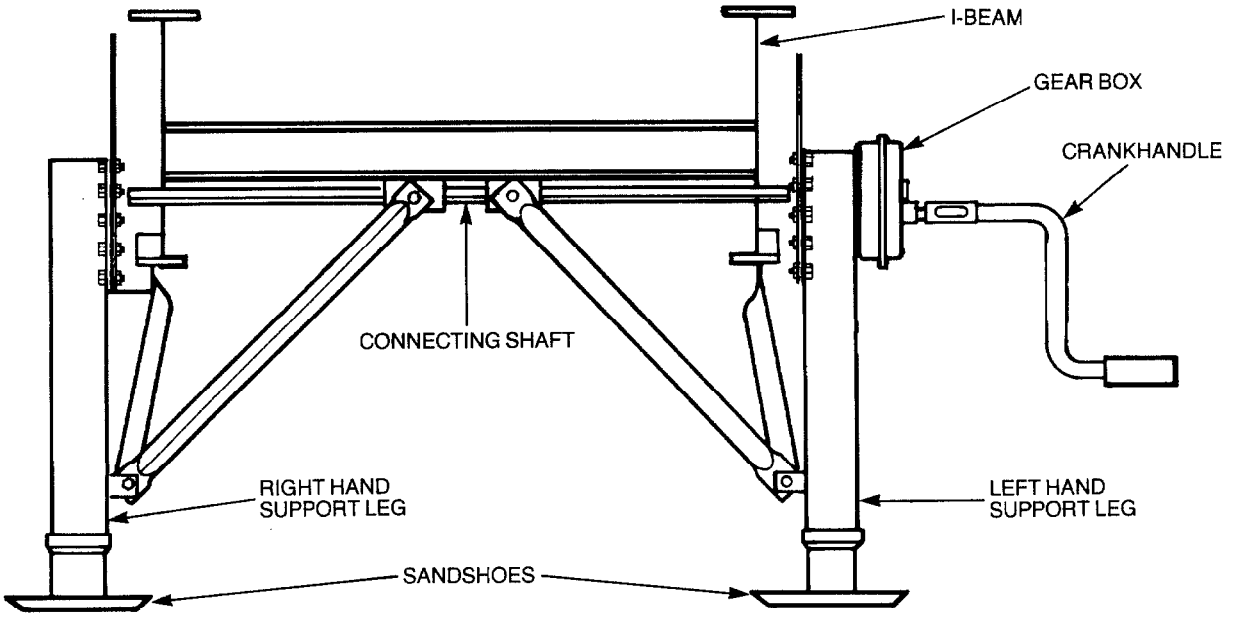

Figure 24 — Retractable Support Legs

UNCONTROLLED WHEN PRINTED

Fig. 25) to allow for the coupling of a dolly converter and trailer for road train use. The coupling is capable of towing a laden 50 tonne trailer.

51. With the coupling pin in the raised position the drawbar eye when it enters the jaw, releases the pin which automatically passes through the drawbar eye and locks in position. When coupling is achieved the pin is locked in position with the primary bolt lock which is integral with the lift lever. An automatic lock/indicator gives added security by indicating that the coupling pin is in the locked position and acts as a secondary safety lock. Normal rotational movement is 40°, after which the coupling returns to the neutral position. In the event of a roll-over accident the coupling can rotate through 360° in its mounting without damage to the towing vehicles chassis, drawbar or coupling.

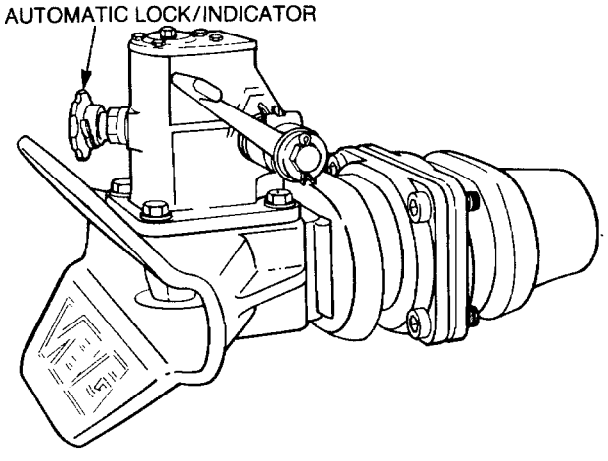

Figure 25 — Tow Coupling

Spare Wheel Carrier

52. Manufactured from tubular steel pipe, mild steel channel and mild steel plate, and mounted forward of the front suspension mounting bracket, is a spare wheel carrier for the carriage of two spare wheels (see Fig. 26).

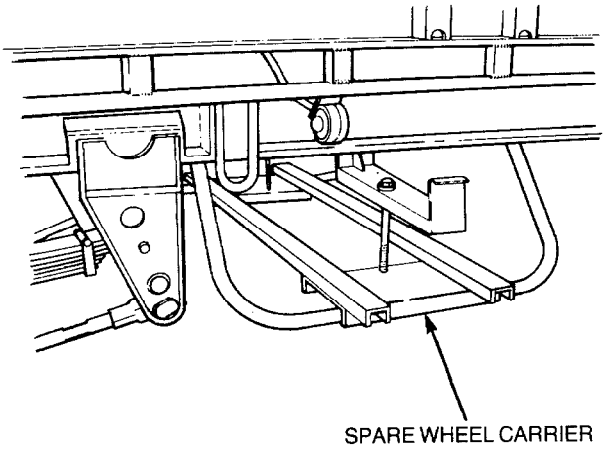

Figure 26 — Spare Wheel Carrier

Gate Rack

53. Mounted forward of the spare wheel carrier is a rack to allow for the storage of the gates and bows when they are not required for the security of stores (see Fig. 27).

54. The gate rack is manufactured from tubular steel pipe and mild steel channel. The rack is secured to the trailer frame by four brackets which allow limited movement of the rack to form a semi-flexible mounting (see Fig. 28).

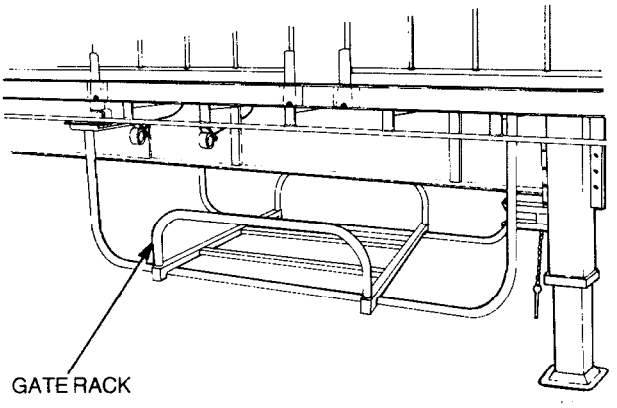

Figure 27 — Gate Rack

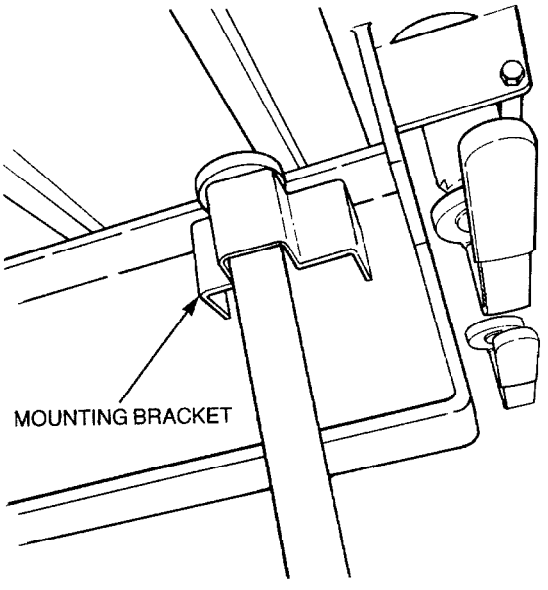

Figure 28 — Gate Rack Mounting Bracket

Twistlocks

55. Six twistlocks are mounted on each side of the trailer to allow for the securing of an ISO container to the trailer decking (see Fig. 29).

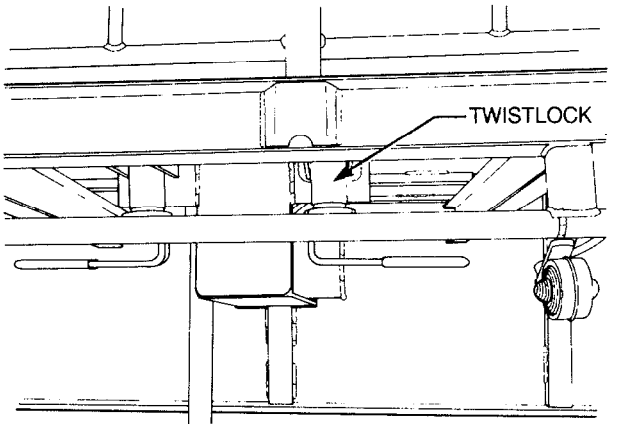

Figure 29 — Twistlocks

Tie Down Rails

56. A 25 mm (1 in.) I.D. steel tie down rail is welded to 27 brackets along the length of both side coaming rails. A rail is also welded to the front and rear coaming rails.

Stowage Bins

57. Mounted on the trailer are four bins to allow for the stowage of camouflague nets, chains and load binders etc. The two bins mounted to the rear of the left hand support leg are 1200 mm x 550 mm x 700 mm in size, while the bins mounted at the rear of the trailer are 800 mm x 550 mm x 500 mm in size. The bins are manufactured from mild steel plate and the doors are hinged at the side. The doors, when closed, are secured by two pad bolts.

END

Class 29.0 Code 4

UNCONTROLLED WHEN PRINTED